MOBILE FILTRATION UNIT

GRF SERIES

MPFILTRI®

PASSION TO PERFORM

Contamination management

INDEX

		Page
1	HYDRAULIC FLUIDS	2
2	FLUIDS CONTAMINATION	2
3	EFFECTS OF CONTAMINATION ON HYDRAULIC COMPONENTS	2
4	MEASURING THE SOLID CONTAMINATION LEVEL	3
5	RECOMMENDED CONTAMINATION CLASSES	6
6	WATER IN HYDRAULIC AND LUBRICATING FLUIDS	7

CONTAMINATION MANAGEMENT

1 HYDRAULIC FLUIDS

The fluid is the vector that transmits power, energy within an oleodynamic circuit. In addition to transmitting energy through the circuit, it also performs additional functions such as lubrication, protection and cooling of the surfaces.
The classification of fluids used in hydraulic systems is coded in many regulatory references, different Standards.

The most popular classification criterion divides them into the following families:
- MINERAL OILS
  Commonly used oil deriving fluids.

- FIRE RESISTANT FLUIDS
  Fluids with intrinsic characteristics of incombustibility or high flash point.

- SYNTHETIC FLUIDS
  Modified chemical products to obtain specific optimized features.

- ECOLOGICAL FLUIDS
  Synthetic or vegetable origin fluids with high biodegradability characteristics.

The choice of fluid for a hydraulic system must take into account several parameters.
These parameters can adversely affect the performance of a hydraulic system, causing delay in the controls, pump cavitation, excessive absorption, excessive temperature rise, efficiency reduction, increased drainage, wear, jam/block or air intake in the plant.

The main properties that characterize hydraulic fluids and affect their choice are:
- DYNAMIC VISCOSITY
  It identifies the fluid's resistance to sliding due to the impact of the particles forming it.

- KINEMATIC VISCOSITY
  It is a widespread formal dimension in the hydraulic field.
  It is calculated with the ratio between the dynamic viscosity and the fluid density.
  Kinematic viscosity varies with temperature and pressure variations.

- VISCOSITY INDEX
  This value expresses the ability of a fluid to maintain viscosity when the temperature changes.
  A high viscosity index indicates the fluid's ability to limit viscosity variations by varying the temperature.

- FILTERABILITY INDEX
  It is the value that indicates the ability of a fluid to cross the filter materials.
  A low filterability index could cause premature clogging of the filter material.

- WORKING TEMPERATURE
  Working temperature affects the fundamental characteristics of the fluid.
  As already seen, some fluid characteristics, such as cinematic viscosity, vary with the temperature variation.
  When choosing a hydraulic oil, must therefore be taken into account of the environmental conditions in which the machine will operate.

- COMPRESSIBILITY MODULE
  Every fluid subjected to a pressure contracts, increasing its density.
  The compressibility module identifies the increase in pressure required to cause a corresponding increase in density.

- HYDROLYTIC STABILITY
  It is the characteristic that prevents galvanic pairs that can cause wear in the plant/system.

- ANTIOXIDANT STABILITY AND WEAR PROTECTION
  These features translate into the capacity of a hydraulic oil to avoid corrosion of metal elements inside the system.

- HEAT TRANSFER CAPACITY
  It is the characteristic that indicates the capacity of hydraulic oil to exchange heat with the surfaces and then cool them.

2 FLUID CONTAMINATION

Whatever the nature and properties of fluids, they are inevitably subject to contamination. Fluid contamination can have two origins:

- INITIAL CONTAMINATION
  Caused by the introduction of contaminated fluid into the circuit, or by incorrect storage, transport or transfer operations.

- PROGRESSIVE CONTAMINATION
  Caused by factors related to the operation of the system, such as metal surface wear, sealing wear, oxidation or degradation of the fluid, the introduction of contaminants during maintenance, corrosion due to chemical or electrochemical action between fluid and components, cavitation.
  The contamination of hydraulic systems can be of different nature:

- SOLID CONTAMINATION
  For example rust, slag, metal particles, fibers, rubber particles, paint particles
- or additives

- LIQUID CONTAMINATION
  For example, the presence of water due to condensation or external infiltration or acids

- GASEOUS CONTAMINATION
  For example, the presence of air due to inadequate oil level in the tank, drainage in suction ducts, incorrect sizing of tubes or tanks.

3 EFFECTS OF CONTAMINATION ON HYDRAULIC COMPONENTS

Solid contamination is recognized as the main cause of malfunction, failure and early degradation in hydraulic systems. It is impossible to delete it completely, but it can be effectively controlled by appropriate devices.

CONTAMINATION IN PRESENCE OF LARGE TOLERANCES

CONTAMINATION IN PRESENCE OF NARROW TOLERANCES

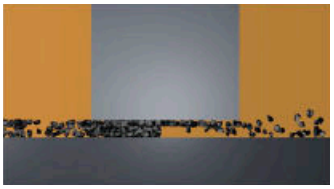

Solid contamination mainly causes surface damage and component wear.

- SURFACE EROSION
  Cause of leakage through mechanical seals, reduction of system performance, variation in adjustment of control components, failures.

- ADHESION OF MOVING PARTS
  Cause of failure due to lack of lubrication.

- DAMAGES DUE TO FATIGUE
  Cause of breakdowns and components breakdown.

ABRASION

EROSION

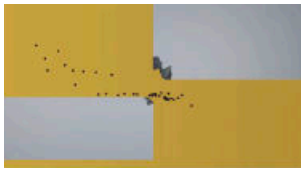

ADHESION

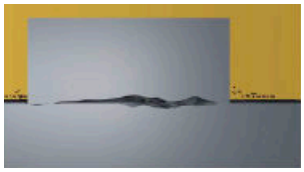

FATIGUE

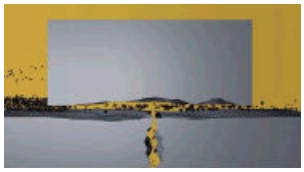

Liquid contamination mainly results in decay of lubrication performance and protection of fluid surfaces.

DISSOLVED WATER

- INCREASING FLUID ACIDITY
  Cause of surface corrosion and premature fluid oxidation

- GALVANIC COUPLE AT HIGH TEMPERATURES
  Cause of corrosion

FREE WATER - ADDITIONAL EFFECTS

- DECAY OF LUBRICANT PERFORMANCE
  Cause of rust and sludge formation, metal corrosion and increased solid contamination

- BATTERY COLONY CREATION
  Cause of worsening in the filterability feature

- ICE CREATION AT LOW TEMPERATURES
  Cause damage to the surface

- ADDITIVE DEPLETION
  Free water retains polar additives

Gaseous contamination mainly results in decay of system performance.

- CUSHION SUSPENSION
  Cause of increased noise and cavitation.

- FLUID OXIDATION
  Cause of corrosion acceleration of metal parts.

- MODIFICATION OF FLUID PROPERTIES
  (COMPRESSIBILITY MODULE, DENSITY, VISCOSITY)
  Cause of system's reduction of efficiency and of control.
  It is easy to understand how a system without proper contamination management is subject to higher costs than a system that is provided.

- MAINTENANCE
  Increase maintenance activities, spare parts, machine stop costs.

- ENERGY AND EFFICIENCY
  Efficiency and performance reduction due to friction, drainage, cavitation.

4 MEASURING THE SOLID CONTAMINATION LEVEL

The level of contamination of a system identifies the amount of contaminant contained in a fluid.
This parameter refers to a unit volume of fluid.
The level of contamination may be different at different points in the system.
From the information in the previous paragraphs, it is also apparent that the level of contamination is heavily influenced by the working conditions of the system, by its working years and by the environmental conditions.

What is the size of the contaminating particles that we must handle in our hydraulic circuit?

HUMAN HAIR
(75 µm)

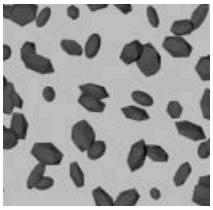

MINIMUM DIMENSION VISIBLE WITH HUMAN EYES
(40 µm)

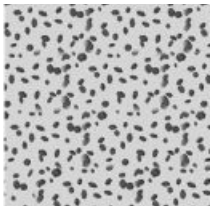

TYPICAL CONTAMINANT DIMENSION IN A HYDRAULIC CIRCUIT
(4-14 µm)

Contamination level analysis is significant only if performed with a uniform and repeatable method, conducted with standard test methods and suitably calibrated equipment.
To this end, ISO has issued a set of standards that allow tests to be conducted and express the measured values in the following ways.

- GRAVIMETRIC LEVEL - ISO 4405

The level of contamination is defined by checking the weight of particles collected by a laboratory membrane. The membrane must be cleaned, dried and desiccated, with fluid and conditions defined by the Standard.
The volume of fluid is filtered through the membrane by using a suitable suction system. The weight of the contaminant is determined by checking the weight of the membrane before and after the fluid filtration.

CLEAN
MEMBRANE

CONTAMINATED
MEMBRANE

- CUMULATIVE DISTRIBUTION OF THE PARTICLES SIZE - ISO 4406

The level of contamination is defined by counting the number of particles of certain dimensions per unit of volume of fluid. Measurement is performed by Automatic Particle Counters (APC).
Following the count, the contamination classes are determined, corresponding to the number of particles detected in the unit of fluid.
The most common classification methods follow ISO 4406 and SAE AS 4059 (Aerospace Sector) regulations.
NAS 1638 is still used although obsolete.

Classification example according to ISO 4406

The International Standards Organisation standard ISO 4406 is the preferred method of quoting the number of solid contaminant particles in a sample.
The code is constructed from the combination of three scale numbers selected from the following table.
The first number represents the number of particles that are larger than 4 $\mu m_{(c)}$.
The second number represents the number of particles larger than 6 $\mu m_{(c)}$.
The third scale number represents the number of particles in a millilitre sample of the fluid that are larger than 14 $\mu m_{(c)}$.

ISO 4406 - Allocation of Scale Numbers

Class	Number of particles per ml	
	Over	Up to
28	1 300 000	2 500 000
27	640 000	1 300 000
26	320 000	640 000
25	160 000	320 000
24	80 000	160 000
23	40 000	80 000
22	20 000	40 000
21	10 000	20 000
20	5 000	10 000
19	2 500	5 000
18	1 300	2 500
17	640	1 300
16	320	640
15	160	320
14	80	160
13	40	80
12	20	40
11	10	20
10	5	10
9	2.5	5
8	1.3	2.5
7	0.64	1.3
6	0.32	0.64
5	0.16	0.32
4	0.08	0.16
3	0.04	0.08
2	0.02	0.04
1	0.01	0.02
0	0	0.01

> 4 $\mu m_{(c)}$ = 350 particles
> 6 $\mu m_{(c)}$ = 100 particles
> 14 $\mu m_{(c)}$ = 25 particles

16 / 14 / 12

ISO 4406 Cleanliness Code System

Microscope counting examines the particles differently to APCs and the code is given with two scale numbers only.
These are at 5 µm and 15 µm equivalent to the 6 $\mu m_{(c)}$ and 14 $\mu m_{(c)}$ of APCs.

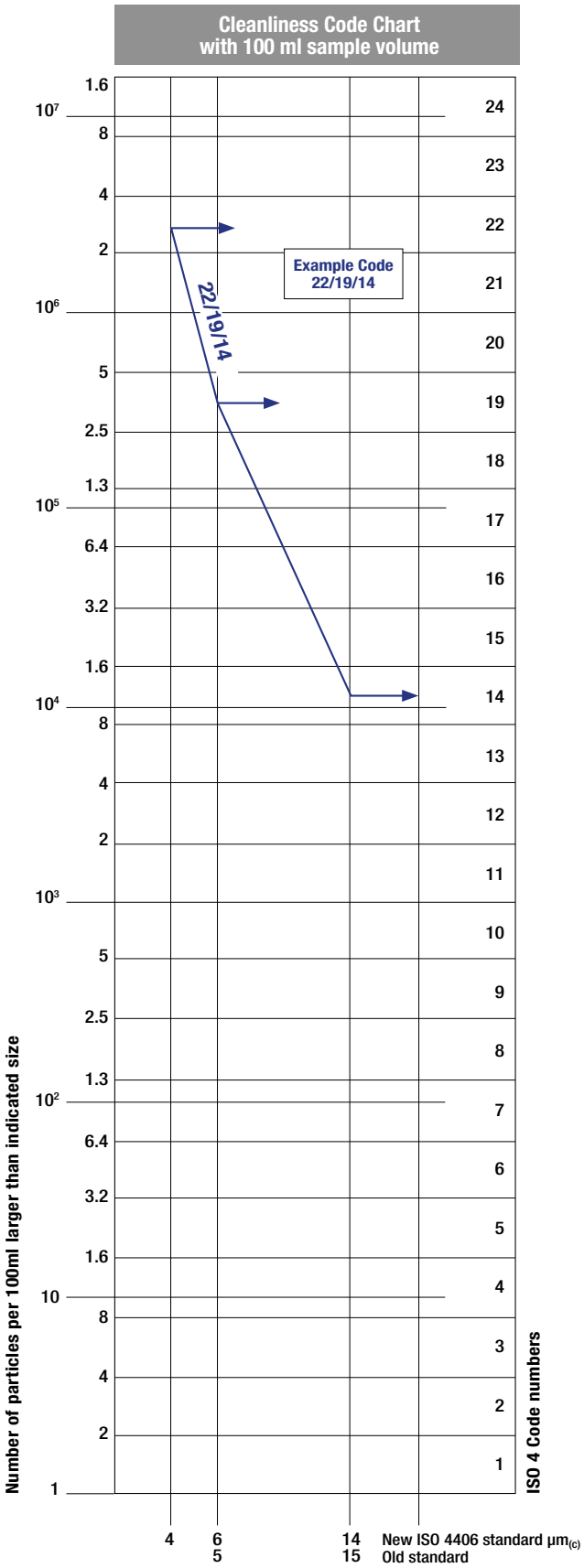

- CUMULATIVE DISTRIBUTION OF THE PARTICLES SIZE
  SAE AS4059-1 and SAE AS4059-2

Classification example according to SAE AS4059 - Rev. G

The code, prepared for the aerospace industry, is based on the size, quantity, and particle spacing in a 100 ml fluid sample. The contamination classes are defined by numeric codes, the size of the contaminant is identified by letters (A-F).

This SAE Aerospace Standard (AS) defines cleanliness levels for particulate contamination of hydraulic fluids and includes methods of reporting data relating to the contamination levels. Tables 1 and 2 below provide differential and cumulative particle counts respectively for counts obtained by an automatic particle counter, e.g. LPA3.

Table 1 - Class for differential measurement

Class	Dimension of contaminant Maximum Contamination Limits per 100 ml				(3)
	5-15 µm	15-25 µm	25-50 µm	50-100 µm	>100 µm (1)
	6-14 µm(c)	14-21 µm(c)	21-38 µm(c)	38-70 µm(c)	>70 µm(c) (2)
00	125	22	4	1	0
0	250	44	8	2	0
1	500	89	16	3	1
2	1 000	178	32	6	1
3	2 000	356	63	11	2
4	4 000	712	126	22	4
5	8 000	1 425	253	45	8
6	16 000	2 850	506	90	16
7	32 000	5 700	1 012	180	32
8	64 000	11 400	2 025	360	64
9	128 000	22 800	4 050	720	128
10	256 000	45 600	8 100	1 440	256
11	512 000	91 200	16 200	2 880	512
12	1 024 000	182 400	32 400	5 760	1 024

6 - 14 µm(c) = 15 000 particles
14 - 21 µm(c) = 2 200 particles
21 - 38 µm(c) = 200 particles
38 - 70 µm(c) = 35 particles
> 70 µm(c) = 3 particles
SAE AS4059 REV G - Class 6

(1) Size range, optical microscope, based on longest dimension as measured per AS598 or ISO 4407. **(2)** Size range, APC calibrated per ISO 11171 or an optical or electron microscope with image analysis software, based on projected area equivalent diameter.

Table 2 - Class for cumulative measurement

Class	Dimension of contaminant Maximum Contamination Limits per 100 ml					
	>1 µm	>5 µm	>15 µm	>25 µm	>50 µm	>100 µm (1)
	>4 µm(c)	>6 µm(c)	>14 µm(c)	>21 µm(c)	>38 µm(c)	>70 µm(c) (2)
000	195	76	14	3	1	0
00	390	152	27	5	1	0
0	780	304	54	10	2	0
1	1 560	609	109	20	4	1
2	3 120	1 217	217	39	7	1
3	6 250	2 432	432	76	13	2
4	12 500	4 864	864	152	26	4
5	25 000	9 731	1 731	306	53	8
6	50 000	19 462	3 462	612	106	16
7	100 000	38 924	6 924	1 224	212	32
8	200 000	77 849	13 849	2 449	424	64
9	400 000	155 698	27 698	4 898	848	128
10	800 000	311 396	55 396	9 796	1 696	256
11	1 600 000	622 792	110 792	19 592	3 392	512
12	3 200 000	1 245 584	221 584	39 184	6 784	1 024

> 4 µm(c) = 45 000 particles
> 6 µm(c) = 15 000 particles
> 14 µm(c) = 1 500 particles
> 21 µm(c) = 250 particles
> 38 µm(c) = 15 particles
> 70 µm(c) = 3 particle
SAE AS4059 REV G
cpc* Class 6 6/6/5/5/4/2

(1) Size range, optical microscope, based on longest dimension as measured per AS598 or ISO 4407. **(2)** Size range, APC calibrated per ISO 11171 or an optical or electron microscope with image analysis software, based on projected area equivalent diameter. **(3)** Contamination classes and particle count limits are identical to NAS 1638.

* cumulative particle count

- CLASSES OF CONTAMINATION ACCORDING TO NAS 1638 (January 1964)

The NAS system was originally developed in 1964 to define contamination classes for the contamination contained within aircraft components. The application of this standard was extended to industrial hydraulic systems simply because nothing else existed at the time.
The coding system defines the maximum numbers permitted of 100 ml volume at various size intervals (differential counts) rather than using cumulative counts as in ISO 4406. Although there is no guidance given in the standard on how to quote the levels, most industrial users quote a single code which is the highest recorded in all sizes and this convention is used on MP Filtri APC's.
The contamination classes are defined by a number (from 00 to 12) which indicates the maximum number of particles per 100 ml, counted on a differential basis, in a given size bracket.

Size Range Classes (in microns)

Maximum Contamination Limits per 100 ml					
Class	5-15	15-25	25-50	50-100	>100
00	125	22	4	1	0
0	250	44	8	2	0
1	500	89	16	3	1
2	1 000	178	32	6	1
3	2 000	356	63	11	2
4	4 000	712	126	22	4
5	8 000	1 425	253	45	8
6	16 000	2 850	506	90	16
7	32 000	5 700	1 012	180	32
8	64 000	11 400	2 025	360	64
9	128 000	22 800	4 050	720	128
10	256 000	45 600	8 100	1 440	256
11	512 000	91 200	16 200	2 880	512
12	1 024 000	182 400	32 400	5 760	1 024

5-15 µm = 42 000 particles
15-25 µm = 2 200 particles
25-50 µm = 150 particles
50-100 µm = 18 particles
> 100 µm = 3 particles
Class NAS 8

- CUMULATIVE DISTRIBUTION OF THE PARTICLES SIZE - ISO 4407

The level of contamination is defined by counting the number of particles collected by a laboratory membrane per unit of fluid volume. The measurement is done by a microscope. The membrane must be cleaned, dried and desiccated, with fluid and conditions defined by the Standard. The fluid volume is filtered through the membrane, using a suitable suction system.
The level of contamination is identified by dividing the membrane into a predefined number of areas and by counting the contaminant particles using a suitable laboratory microscope.

MICROSCOPE CONTROL
AND MEASUREMENT

Example figure 1and 2

COMPARISON PHOTOGRAPH'S
1 graduation = 10µm

Fig. 1

Fig. 2

For other comparison photographs for contamination classes see the "*Fluid Condition and Filtration Handbook*".

- CLEANLINESS CODE COMPARISON

Although ISO 4406 standard is being used extensively within the hydraulics industry other standards are occasionally required and a comparison may be requested. The table below gives a very general comparison but often no direct comparison is possible due to the different classes and sizes involved.

ISO 4406	SAE AS4059 Table 2	SAE AS4059 Table 1	NAS 1638
> 4 µm(c) 6 µm(c) 14 µm(c)	> 4 µm(c) 6 µm(c) 14 µm(c)	4-6 6-14 14-21 21-38 38-70 >70	5-15 15-25 25-50 50-100 >100
23 / 21 / 18	13A / 12B / 12C	12	12
22 / 20 / 17	12A / 11B / 11C	11	11
21 / 19 / 16	11A / 10B / 10C	10	10
20 / 18 / 15	10A / 9B / 9B	9	9
19 / 17 / 14	9A / 8B / 8C	8	8
18 / 16 / 13	8A / 7B / 7C	7	7
17 / 15 / 12	7A / 6B / 6C	6	6
16 / 14 / 11	6A / 5B / 5C	5	5
15 / 13 / 10	5A / 4B / 4C	4	4
14 / 12 / 09	4A / 3B / 3C	3	3

5 RECOMMENDED CONTAMINATION CLASSES

The table below, gives a selection of maximum contamination levels that are typically issued by component manufacturer.
These relate to the use of the correct viscosity mineral fluid. An even cleaner level may be needed if the operation
is severe, such as high frequency fluctuations in loading, high temperature or high failure risk.

Piston pumps with fixed flow rate	•					
Piston pumps with variable flow rate			•			
Vane pumps with fixed flow rate		•				
Vane pumps with variable flow			•			
Engines	•					
Hydraulic cylinders	•					
Actuators					•	
Test benches						•
Check valve	•					
Directional valves	•					
Flow regulating valves	•					
Proportional valves				•		
Servo-valves					•	
Flat bearings			•			
Ball bearings				•		
ISO 4406 CODE	20/18/15	19/17/14	18/16/13	17/15/12	16/14/11	15/13/10
Recommended filtration $\beta_{x(c)} \geq 1.000$	$\beta_{20(c)}$ >1000	$\beta_{15(c)}$ >1000	$\beta_{10(c)}$ >1000	$\beta_{7(c)}$ >1000	$\beta_{7(c)}$ >1000	$\beta_{5(c)}$ >1000

6 WATER IN HYDRAULIC AND LUBRICATING FLUIDS

Water Content

In mineral oils and non-aqueous resistant fluids water is undesirable. Mineral oil usually has a water content of 50-300 ppm (@40°C) which it can support without adverse consequences.
Once the water content exceeds about 300 ppm the oil starts to appear hazy. Above this level there is a danger of free water accumulating in the system in areas of low flow. This can lead to corrosion and accelerated wear.
Similarly, fire resistant fluids have a natural water which may be different to mineral oil.

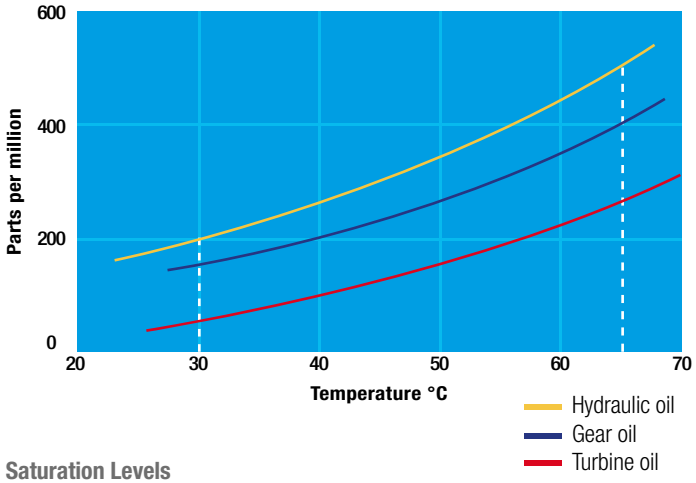

Saturation Levels

Since the effects of free (also emulsified) water are more harmful than those of dissolved water, water levels should remain well below the saturation point.

However, even water in solution can cause damage and therefore every reasonable effort should be made to keep saturation levels as low as possible. There is no such thing as too little water. As a guideline, we recommend maintaining saturation levels below 50% in all equipment.

TYPICAL WATER SATURATION LEVEL FOR NEW OILS
Examples:
Hydraulic oil @ 30°C = 200 ppm = 100% saturation
Hydraulic oil @ 65°C = 500 ppm = 100% saturation

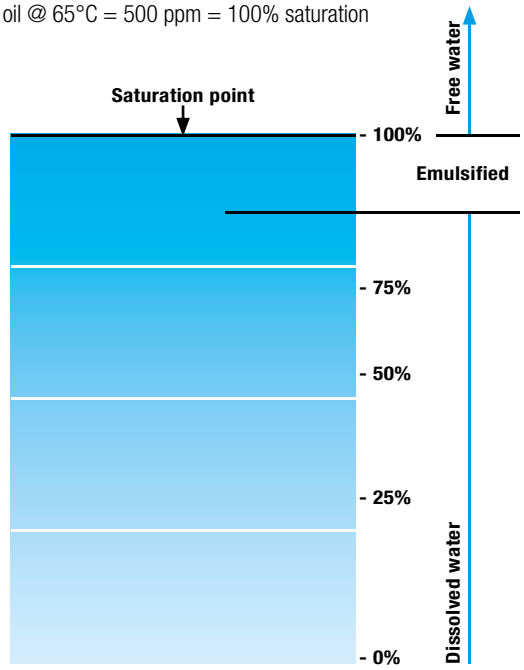

W - Water and Temperature Sensing

"W" option, in MP Filtri Contamination Monitoring Products, indicates water content as a percentage of saturation and oil temperature in degrees centigrade. 100% RH corresponds to the point at which free water can exist in the fluid. i.e. the fluid is no longer able to hold the water in a dissolved solution.
The sensor can help provide early indication of costly failure due to free water, including but not exclusive to corrosion, metal surface fatigue e.g. bearing failure, reduced lubrication & load carrying characteristics.

Different oils have different saturation levels and therefore RH (relative humidity) % is the best and most practical measurement.

Water absorber

Water is present everywhere, during storage, handling and servicing.
MP Filtri filter elements feature an absorbent media which protects hydraulic systems from both particulate and water contamination.
MP Filtri's filter element technology is available with inorganic microfiber media with a filtration rating 25 µm (therefore identified with media designation WA025, providing absolute filtration of solid particles to $\beta_{x(c)} = 1000$).
Absorbent media is made by water absorbent fibers which increase in size during the absorption process. Free water is thus bonded to the filter media and completely removed from the system (it cannot even be squeezed out).

Filter Media

Fabric that absorbs water

Absorber media layer

The Filter Media has absorbed water

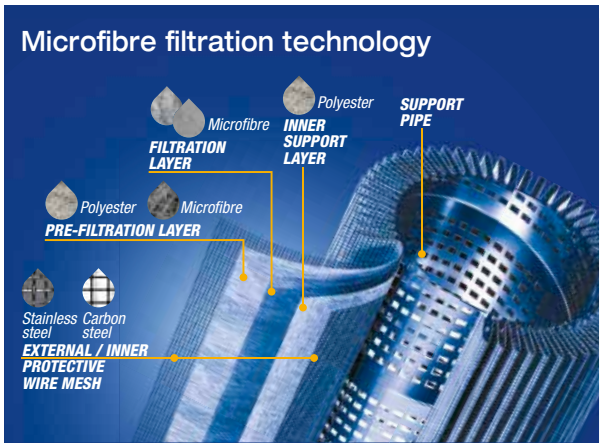

By removing water from your fluid power system, you can prevent such key problems as:
- corrosion (metal etching)
- loss of lubricant power
- accelerated abrasive wear in hydraulic components
- valve-locking
- bearing fatigue
- viscosity variance (reduction in lubricating properties)
- additive precipitation and oil oxidation
- increase in acidity level
- increased electrical conductivity (loss of dielectric strength)
- slow/weak response of control systems

Product availability - UFM Series:
UFM 041 - UFM 051 - UFM 091 - UFM 181 - UFM 919

GRF 1

Panel Mounted Fitration Unit - 5 / 10 gpm

GRF 1

Description

Mobile filtration units

The GRF1 series are compact efficient condition loop systems with options to implement ICM contamination monitor and auto-shutdown feature when cleanliness levels are achieved.

Panel mount filtration unit with selection of MPS150 spin-on or LMP211 cartridge style discharge filter assembly with a wide selection of filter media including water removal and optional ICM 2.0 contamination monitor with auto-shutdown control and strobe light indicator.

Performance

For filtering mineral and synthetic based oils (hydraulic oils, gear oils, and turbine oils) with a maximum operating viscosity range of 3000ssu/648cSt at 100°F within ambient temperature ranges of -15°F to 150°F

- Filtering contaminated systems
- Collecting oil samples for analysis
- Dispensing new oil

> Features & Benefits

- Carbon steel frame with drip tray
- 1 HP, 115 VAC, 60 Hz motor
- Low pressure aluminum heads
- Aluminum gear pump - available in 5 and 10 gpm
- Pop-up indicator triggers when elements need to be changed
- Pump relief opens at 150 psi
- Approximate weight 75-80 lbs
- Approximate dimensions 24”(L) x 12”(W) x 18”(H)

Replacement spin-on element options:

Part Number	Beta Rating	Desired Cleanliness Level (ISO Code)
CSG150A01A	ß1(c)=1000	13/11/8 - 12/10/7
CSG150A03A	ß3(c)=1000	14/12/19 - 13/11/18
CSG150A06A	ß6(c)=1000	17/15/12 - 14/12/19
CSG150A10A	ß10(c)=1000	18/16/13 - 17/15/12
CSG150A25A	ß25(c)=1000	21/19/16 - 20/18/15
CSGW150A03A	Water Removal	

Dimensions

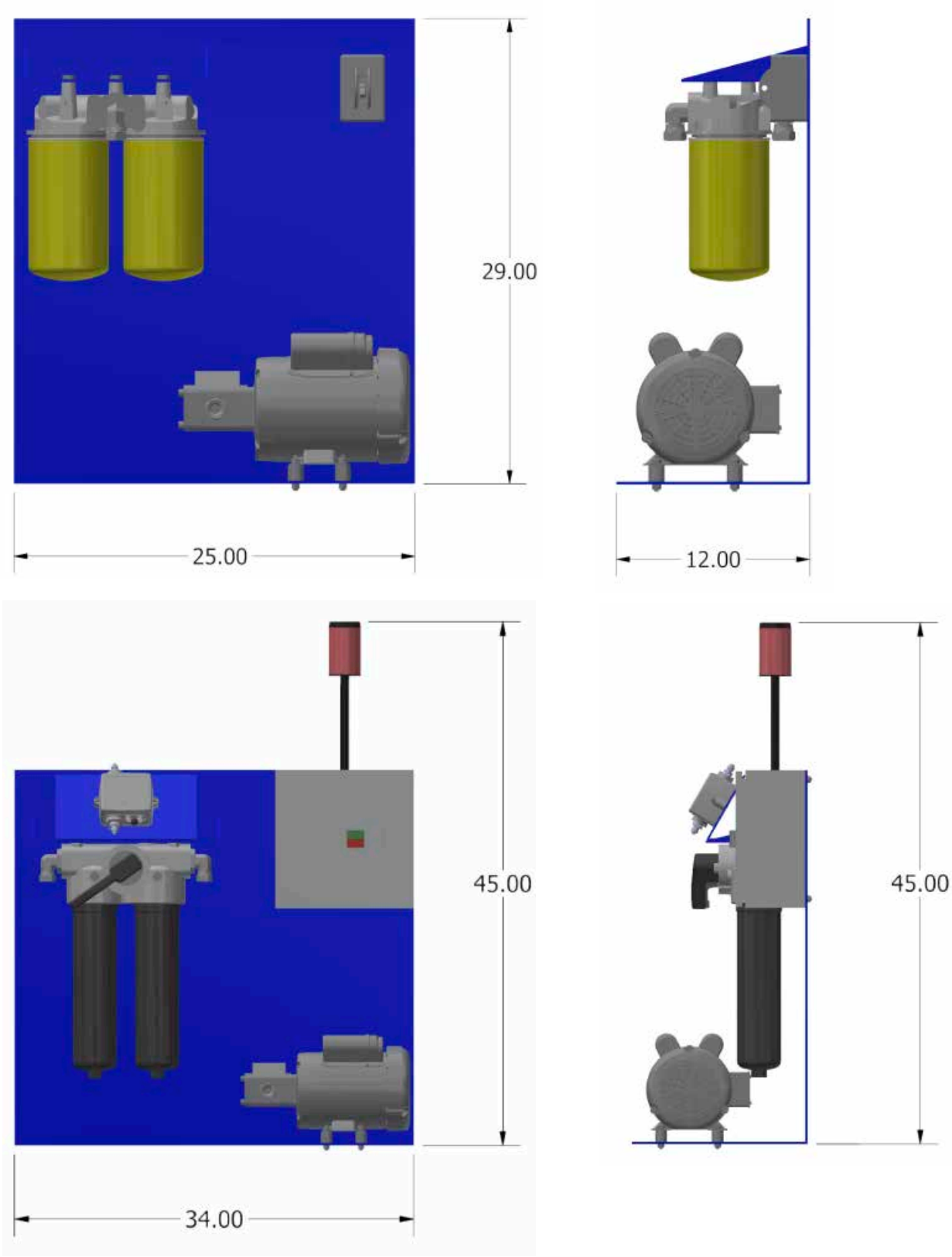

GRF 1

Designation & Ordering code

STATIONARY FILTRATION UNIT GRF 1

Example: GRF1 | 05 | A | 1 | 1 | - | A03 | P01

Series

GRF1

Size

05 5 gpm
10 10 gpm

Seals

A Buna

Type

1 110 V
3 230 V

Auto-shut down control Feature

- No auto-shut down control
1 With auto-shut down control *

*Note: Auto shutdown feature is only applicable with optional ICM

Clogging Indicator

- No strobe light indicator
1 With strobe light indicator

Discharge side element

A01	CSG150A01A
A03	CSG150A03A
A06	CSG150A06A
A10	CSG150A10A
A25	CSG150A25A
WA03	CSGW150A03A
WP10	CSGW150P10A
WP25	CSGW150P25A

Execution

P01 MP Filtri standard
Pxx Customize

ICM contamination monitor is not include and should consult factory

ICM CONTAMINATION MONITOR

ICM Conamination Monitor

ICM-0-M-K-R-G1	Without moisture and temperature sensor, with screen, with relays/external alarm outputs
ICM-W-M-K-R-G1	With moisture and temperature sensor with screen, with relays/external alarm outputs
ICM-0-M-K-U-G1	Without moisture and temperature sensor, with screen, with test record transfer plus relays/external alarm outputs
ICM-W-M-K-U-G1	With moisture and temperture, with screen, with test record transfer plus relays/external alarm outputs

Design reference

2.0 ICM 2.0
4.0 ICM 4.0 with integral WiFi

Note: Consult factory for options not listed

MP Filtri reserves the right to make improvements in design, product features and specifications at anytime without notice.

GRF 3

Mobile Filtration Unit - 5 / 10 gpm

GRF 3

Description

Mobile filtration units

GRF 3 mobile filtration units are cost effective and efficient in transferring or conditioning fluid in hydraulic reservoirs.

Portable filtration unit with selection of MPS350 dual spin-on or LMP211 cartridge style discharge filter assembly with a wide selection of filter media including water removal with optional ICM 2.0 or ICM 4.0 contamination monitor.

Applications

- Oil transfer from bulk drums to tank
- Reservoir clean-up

> Features & Benefits

- 1 HP, 120 VAC, 1- Phase TEFC motor with cord and plug
- Rugged 5 gpm or 10 gpm gear pump with integral relief valve
- 10 ft. wire reinforced clear suction and discharge hoses with stainless steel wands
- Heavy Duty hand truck with pneumatic tires powder coated MP Filtri blue
- Large drip pan under filter element assemblies
- 2 pc 4ft. stainless steel wands
- Wand storage brackets with accommodations to contain excess in drip pan
- 25 ft. electrical cord with end plug, includes cord storage hook
- On-board sealed on/off switch

Suction Side

- 1 pc CSG100M90A - 90 µm wire mesh element

Discharge Side - 1

- 1 pc MPS350 Dual Spin-on with 25 psi bypass
- Choice of 1, 3, 6, 10, 25 µm elements available
- With indicator

Discharge Side - 2

- 1 pc LMP 2102 housing with 50 psi bypass
- Choice of 1, 3, 6, 10, 25 µm elements available
- With indicator

Dimensions

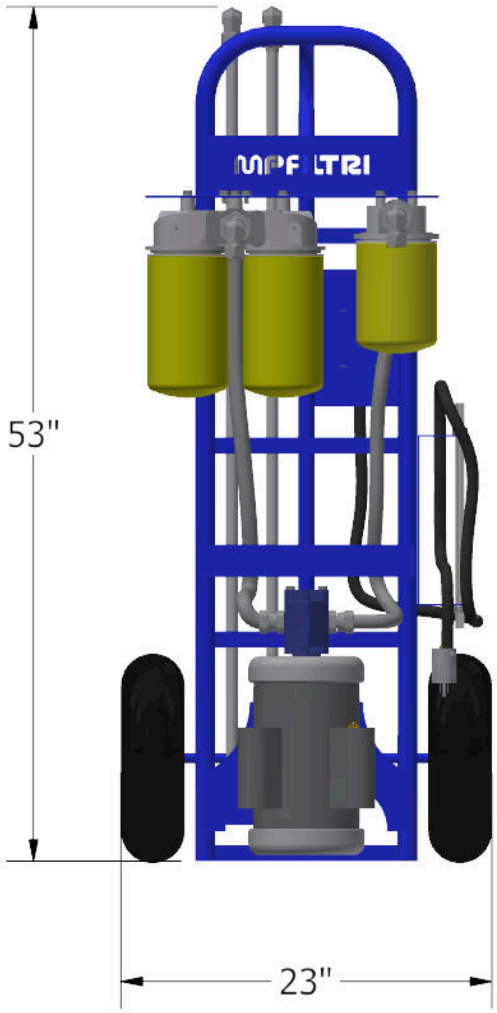

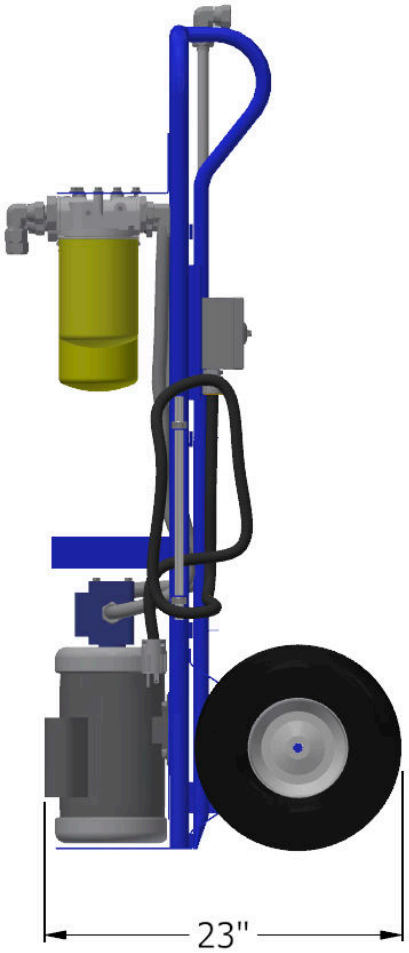

GRF 3

Designation & Ordering code

MOBILE FILTRATION GRF 3

Example: GRF3 | 10 | 1 | M90 | A | A03 | P01

Series

GRF3

Size

05 5 gpm

10 10 gpm

Type

1 MPS350 assembly on discharge

2 LMP2112 assembly on discharge

Suction side Spin-on element

M90 Wire mesh 90 µm

Seals

A Buna

Discharge side element (Spin-On type 1 only)

	MPS 300
A01	CSG150A01AP01
A03	CSG150A03AP01
A06	CSG150A06AP01
A10	CSG150A10AP01
A25	CSG150A25AP01
WA03	CSGW150A03AP01
WP10	CSGW150P10AP01
WP25	CSGW150P25AP01

Discharge side element (Cartridge type 2-3 only)

	LMP 211
A01	CU2102A01ANP01
A03	CU2102A03ANP01
A06	CU2102A06ANP01
A10	CU2102A10ANP01
A25	CU2102A25ANP01
WA25	CU2102WA25ANP01

Execution

P01 MP Filtri standard

Pxx Customize

Note: Consult factory for options not listed

MP Filtri reserves the right to make improvements in design, product features and specifications at anytime without notice.

GRF 5

Mobile Filtration Unit - 5 / 10 gpm

GRF 5

Description

Mobile filtration units

GRF 5 mobile filtration units are cost effective and efficient in transferring or conditioning fluid in hydraulic reservoirs that includes ICM 2.0 or ICM 4.0 contamination monitor and auto-shut down control when cleanliness targets are achieved.

Portable filtration unit with LMP211 cartridge style discharge filter assembly with a wide selection of filter media including water removal with optional ICM 2.0 or ICM 4.0 contamination monitor.

Applications

- Oil transfer from bulk drums to tank
- Reservoir clean-up

> Features & Benefits

- 1 HP, 115 VAC, 1- Phase TEFC motor with motor start/stop, cord and plug
- Rugged 5 gpm or 10 gpm gear pump with integral relief valve
- 10 ft. wire reinforced clear suction and discharge hoses with stainless steel wands
- Mounted inline contamination monitoring (ICM) unit to measure fluid cleanliness
- Heavy duty hand truck with pneumatic tires, powder coated in MP Filtri Blue
- 2 pc 4 ft. stainless steel wands
- Wand Storage brackets with accommodation to contain excess in drip pan
- 25 ft. electrical cord with end plug, includes cord storage hook
- On-board sealed on/off switch

Suction Side

- 1 pc CSG100M90A - 90 µm wire mesh element

Discharge Side

- 1 pc LMP2112 housing with 50 psi bypass
- Choice of 1, 3, 6, 10, 25 µm elements available

ICM

- 8 channel contamination measurement
- International standard formats ISO 4406, NAS 1638 AS 4059E and ISO 11218
- Data logging and 4000 test result memory
- Mineral oil fluid compatibility
- Optional water/temperature sensor
- Optional 6-key keypad and 128 x 64 LCD back-lit display
- Optional relays
- CMP View software included

Dimensions

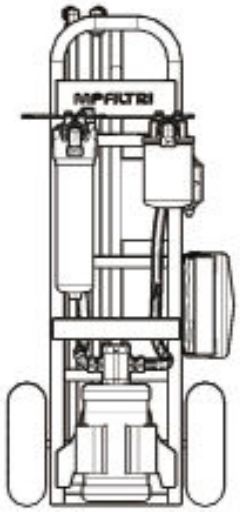

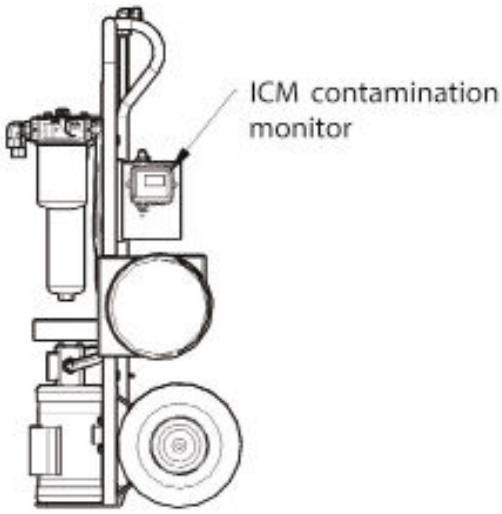

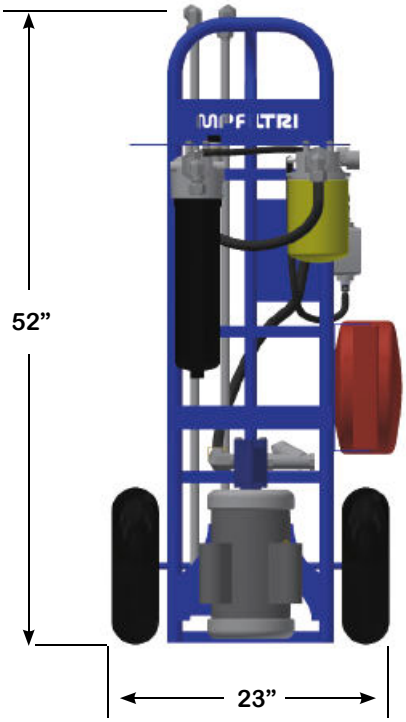

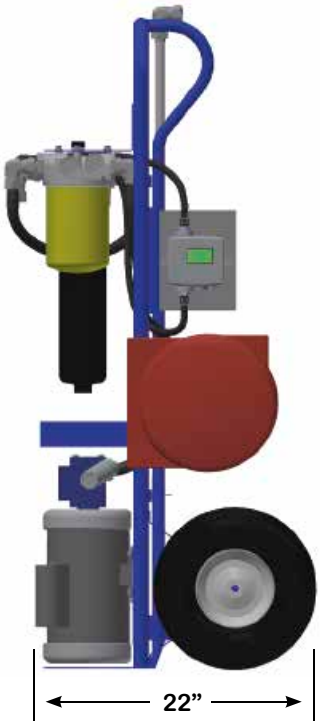

GRF 5

Designation & Ordering code

MOBILE FILTRATION GRF 5

Example: GRF5 | 10 | 2 | Y | A | A03 | ICMW | M | K | U | 2.0 | P01

Series

GRF5

Size

05 5 gpm

10 10 gpm

Type

2 LMP2112 assembly on discharge

Suction side spin-on element

Y 250 Y Strainer

Seals

A Buna

Discharge side cartridge element

A01	CU2102A01ANP01
A03	CU2102A03ANP01
A06	CU2102A06ANP01
A10	CU2102A10ANP01
A25	CU2102A25ANP01
WA25	CU2102WA25ANP01

ICM Water / Temperature sensor

ICM0	Without water / temperature sensor
ICMW	With water / temperature sensor

Fluid Compatibilty

M Mineral Oil

Keypad

K With 6-keypad with display

Relays

R With relays/external alarms

Design Reference

2.0	ICM 2.0
4.0	ICM 4.0 with integral WiFi

Execution

P01	MP Filtri standard
Pxx	Customize

Note: Consult factory for options not listed

MP Filtri reserves the right to make improvements in design, product features and specifications at anytime without notice.

GRF 6

Mobile Fluid Transfer / Filtration Unit - 5 / 10 gpm

GRF 6

Description

Mobile filtration units

GRF 6 mobile transfer/filtration units are cost effective and efficient in transferring or conditioning fluid prior to filling hydraulic reservoirs. Portable fluid transfer/filtration unit with selection of MPS300 dual spin-on or LMP211 cartridge style discharge filter assembly with a wide selection of filter media including water removal.

Performance Data

For filtering mineral and synthetic based oils (hydraulic oils, gear oils and turbine oils) with a maximum operating viscosity range of 300ssu / 648cSt at 100°F within ambient temperature ranges of -15°F to 150°F.

Standard Features

Frame	Carbon steel, 30 gallon tank with 4 wheels
Paint	Blue
Motor	1 HP or 120vac 60Hz
Filter Options	MPS 300 Dual Spin-on or LMP211 Cartridge Style
Pumps	Heavy Duty Cast Iron Gear Pump: Available in 5 and 10 gpm
Connections	3/4" JIC
Hoses	10 ft. Suction and Return
Power Switch	Sealed on/off power switch
Cord	40 ft. retractable cord reel
Breather	Desiccant breather
Filter Indicators	Pop up indicator triggers when elements need to be changed
Pump Relief	Opens at 150 psi
Weight	Approx. 125 lbs (will vary depending on options)
Dimensions	Approx. 30"(L) x 19"(W) x 35"(H)

Components:

Item Number	Description	QTY
1	Tank	1
2	Motor	1
3	Pump	1
4	Filter Head	
5	Filter Element	
6	Filter Indicator	2
7	Switch On/Off	1
8	Sample Port	2
9	Retractable Reel	1
10	Sight Gauge	1
11	Breather Adapter	1
12	Breather	1
13	Brake	2

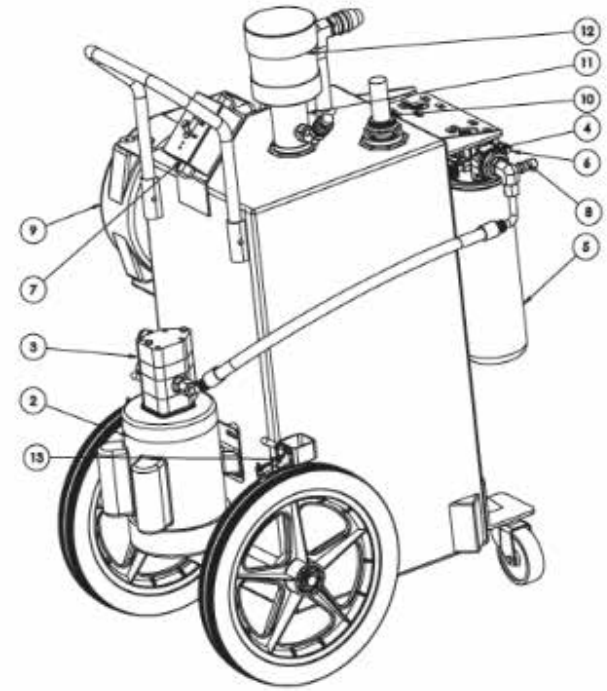

MOBILE FILTRATION GRF 6

Example:								
	GRF6	05	1	A	SA03		1	P01
	GRF6	10	3	A	CA03	CA10	1	P01

Series

GRF6

Size

05 5 gpm

10 10 gpm

Type

1 MPS350 Dual Spin-On assembly on discharge (2) elements required

2 LMP2112 Single Cartridge assembly on discharge (1) element required

3 LMP2112 + LMP2112 (2) each Cartridge assemblies on discharge in series (2) elements required

Seals

A Buna

Discharge side element (Spin-On type 1 only)

MPS 300	
SA01	CSG150A01A
SA03	CSG150A03A
SA06	CSG150A06A
SA10	CSG150A10A
SA25	CSG150A25A
SWA03	CSGW150A03AP01
SWP10	CSGW150P10AP01
SWP25	CSGW150P25A Cellulous water removal

Discharge side element (Cartridge type 2-3 only) type 3 requies 2 elements

LMP 211	
CA01	CU2102A01ANP01
CA03	CU2102A03ANP01
CA06	CU2102A06ANP01
CA10	CU2102A10ANP01
CA25	CU2102A25ANP01
CWA25	CU2102WA25ANP01 Inorganic microfiber water removal

Note: If type 3, must select applicable 2nd element for unit

Contamination monitor options

0 Without ICM unit

1 ICM-W-M-K-U-G3-2.0 - mineral oil fluid moisture and temperature sensor with screen, and USB download capability

2 ICM-W-M-K-R-G3-4.0 - mineral oil fluid moisture and temperature sensor with screen, and USB download capability

Note:
(1) each: ICM-USBi module required for programming ICM
(Refer to ICM operator guide for selectable program options)

Fluids other than mineral oil consult factory

Execution

P01 MP Filtri standard

Pxx Customize

Note: Consult factory for options not listed

MP Filtri reserves the right to make improvements in design, product features and specifications at anytime without notice.

GRF Accessories

GRF - DAK

GRF - HAK

GRF - HWKIT - SS

GRF - TAK

Drum Adapter Kit

The Drum Adapter Kit helps keep your lubricants free of moisture and particulate contamination while in storage or during the fluid transfer process. It also allows you to easily pre-filter your lubricant, ensuring you're only putting clean dry oil into your equipment.

> Benefits

- Easily modify your equipment for seamless connection to various filtration systems
- Prevents the ingression of dirt and moisture by utilizing a desiccant breather
- Customizable to fit all your needs

Features

- Various quick disconnects with steel dust plugs allow for various configurations
- 2" NPT connection easily replaces standard drum bungs
- Replaceable desiccant breather with 3/4" NPT adapter

Ordering information

GRF - DAK

Tube lengths available in various size

Hose Wand Kit

Our heavy-duty stainless steel hose wand kit is great for those applications that require them.
Hose wands aren't ideal, but some applications may require them.
They can also be used for short term, while quick disconnects are being added to equipment.

> Benefits

- A quick connect tool that allows you to draw fluids from tanks, buckets, drums or open reservoirs when this is the only option
- Allows you to reach down into tanks for oil transport

Features

- (2) Stainless steel 3/4" tube, 4 ft. long
- 90° female JIC swivel end

Ordering information

GRF - HWKIT - SS

Pictured photo is cropped for visibility. Tubes are 4 ft. long.

Hydraulic Adapter Kit

Our Hydraulic Adapter Kit allows you to easily adapt your equipment with a desiccant breather and quick connects with the use of your system to remain completely sealed to atmospheric ingression, while allowing for easy access during offline filtration or topping reservoirs off.

> Benefits

- Easily modify your equipment for seamless connection to various filtration systems
- Prevents the ingression of dirt and moisture by utilizing a desiccant breather
- Customizable to fit all your needs

Features

- Various quick disconnects with steel dust plugs allow for various configurations
- 6 bolt adapter fits most OEM connections
- Replaceable desiccant breather
- Customizable to fit your specific needs

Ordering information

GRF - HAK

Tote Adapter Kit

Our Tote Adapter Kit allows you to easily adapt your equipment with a desiccant breather and quick connects with the use of a 2” NPT threaded adapter. This allows your system to remain completely sealed to atmospheric ingression, while allowing for easy access during offline filtration or topping reservoirs off.

> Benefits

- Easily modify your equipment for seamless connection to various filtration systems
- Prevents the ingression of dirt and moisture by utilizing a desiccant breather
- Customizable to fit all your needs

Features

- Various quick disconnects with steel dust plugs
- 2” NPT connects to most poly totes
- Replaceable desiccant breather
- Customizable to fit your specific needs
- Spring loaded faucet for easy dispensing

Ordering information

GRF - TAK

Pictured photo is cropped for visibility. Tubes are 4 ft. long.

NOTES

NOTES

NOTES

NOTES

NOTES

All data, details and words contained in this publication are provided for use by technically qualified personnel at their discretion, without warranty of any kind.
MP Filtri reserves the right to make modifications to the models and versions of the described products at any time for both technical and/or commercial reasons.
For updated information please visit our website: *www.mpfiltri.com*
The colors and the pictures of the products are purely indicative.
Any reproduction, partial or total, of this document is strictly forbidden.
All rights are strictly reserved

WORLDWIDE NETWORK

CANADA • CHINA • FRANCE • GERMANY • INDIA • SINGAPORE
UNITED ARAB EMIRATES • UNITED KINGDOM • USA

MPFILTRI®

PASSION TO PERFORM

mpfiltri.com

US - 2024.03