HYDRAULIC FILTRATION

CATALOGUE

MPFILTRI®

PASSION TO PERFORM

A WORLDWIDE LEADER IN THE FIELD OF HYDRAULIC FILTRATION EQUIPMENT.

Our company started life in 1964, when Bruno Pasotto decided to attempt to cater for the requests of a market still to be fully explored, with the study, design, development, production and marketing of a vast range of filters for hydraulic equipment, capable of satisfying the needs of manufacturers in all sectors. The quality of our products, our extreme competitiveness compared with major international producers and our constant activities of research, design and development has made us a worldwide leader in the field of hydraulic circuit filtering.
Present for over 50 years in the market, we have played a truly decisive role in defining our sector, and by now we are a group capable of controlling our entire chain of production, monitoring all manufacturing processes to guarantee superior quality standards and to provide concrete solutions for the rapidly evolving needs of customers and the market.

HYDRAULIC FILTRATION PRODUCTS

page		INTRODUCTION
2	INDEX	
4	COMPANY PROFILE	
8	PRODUCT RANGE	
11	CONTAMINATION MANAGEMENT	
21	FILTER SIZING	

page		SUCTION FILTERS		up to Q_{max} l/min	gpm
33	STRC & MPAC	Submerged suction filter, with bypass or magnetic filter		1000	264
41	SFEX	In-line filter with plastic bowl		100	26
51	SFMC	Semi-submerged positive head suction filter, low flow rate		160	42
61	SFSC	Semi-submerged positive head suction filter, high flow rate		700	185
719	CLOGGING INDICATORS				

page		RETURN FILTERS	up to P_{max} bar	psi	up to Q_{max} l/min	gpm
75	RFEX	Return filter, tank mounted filter suitable for all mineral oil and water glycol applications	16	232	260	69
85	MPFX	Tank top semi-immersed filter, standard filter element disassembly	8	116	900	238
113	MPLX	Tank top semi-immersed filter, standard filter element disassembly	10	145	1800	476
121	MPTX	Tank top semi-immersed filter, easy filter element disassembly	8	116	300	79
139	MFBX	Bowl assembly	8	116	700	185
147	MPF	Tank top semi-immersed filter, standard filter element disassembly	8	116	900	238
175	MPT	Tank top semi-immersed filter, easy filter element disassembly	8	116	300	79
193	MFB	Bowl assembly	8	116	700	185
201	MDH	Heavy industrial applications integrated in the tank - air separation	10	145	500	132
209	MPH	Tank top semi-immersed filter, standard filter element disassembly	10	145	3500	925
233	MPI	Tank top semi-immersed filter, standard filter element disassembly	10	145	3500	925
245	FRI	Tank top semi-immersed filter, easy filter element disassembly, it can be used also as in-line filter	20	290	2500	660
261	RF2	Semi-immersed under-head filter, easy filter element disassembly	20	290	615	162
268	ACCESSORIES					
720	CLOGGING INDICATORS					

page		RETURN / SUCTION FILTERS	up to P_{max} bar	psi	up to Q_{max} l/min	gpm
273	MRSX	Unique TANK TOP filter for mobile machinery, with combined filtration on return and suction to the inlet at the hydrostatic transmissions in closed circuit	10	145	250	66
287	LMP 124 MULTIPORT	Unique IN-LINE filter for mobile machinery, with combined filtration on return and suction to the inlet at the hydrostatic transmissions in closed circuit	80	1160	120	32
722	CLOGGING INDICATORS					

page		SPIN-ON FILTERS	up to P_{max} bar	psi	up to Q_{max} l/min	gpm
297	MPS	Low pressure filter, available with single cartridge (CS) for in-line or flange mounting or with two cartridge on the same axis on the opposite sides	12	174	365	96
313	MSH	In-line low and medium pressure filter available with single cartridge (CH)	35	508	195	52
724	CLOGGING INDICATORS					

INDEX

320 page	LOW & MEDIUM PRESSURE FILTERS		up to P_{max} bar	psi	up to Q_{max} l/min	gpm
323	LFEX	In-line filter with plastic bowl	16	232	300	79
333	LPH 630	Off-line low pressure filter	10	145	1600	352
341	LMP 110	In-line low & medium pressure filter, low to medium flow rate	80	1160	165	44
349	LMP 112 - 123 MULTIPORT	In-line filter with Multiport design for multiple choice connection	80	1160	175	46
365	LMP 210 - 211	In-line low & medium pressure filter, low flow rate	60	870	365	96
375	LMP 400 - 401	In-line low & medium pressure filter, high flow rate	60	870	780	206
383	LMP 430 - 431	In-line low & medium pressure filter, high flow rate	60	870	780	206
393	LMP 950 - 951	In-line filter, available with 2 and up to 6 different heads	30	435	2400	634
399	LMP 952 - 953 - 954	In-line low pressure filter specifically designed to be mounted in series	25	363	4500	1189
411	LMD 211	In-line duplex medium pressure filter	60	870	200	53
419	LMD 400 - 401 & 431	In-line duplex low pressure filter	16	232	600	159
435	LMD 951	In-line duplex filter, available with 2 up to 6 different heads	16	232	1200	317
443		Filters featuring filter elements designed according to DIN24550				
445	LDP - LDD	In-line and duplex medium pressure filter	60	870	360	95
455	LMP 900 - 901	In-line low pressure filter	30	435	2000	528
463	LMP 902 - 903	In-line filter specifically designed to be mounted in series	20	290	3000	793
472	ACCESSORIES					
726	CLOGGING INDICATORS					

474 page	HIGH PRESSURE FILTERS		up to P_{max} bar	psi	up to Q_{max} l/min	gpm
477	FMMX	Typical high pressure filter for mobile applications, low flow rate	420	6092	300	79
487	FMM	Typical high pressure filter for mobile applications, low flow rate	420	6092	300	79
497	FHA	Filter optimized for use in high pressure operating systems, low flow rate	560	8122	150	40
505	FMP 039	Filter high pressure, low flow rate applications	110	1595	80	21
513	FMP	Filter high pressure, high flow rate applications	320	4641	500	132
525	FHP	Typical high pressure filter for mobile applications, high flow rate	420	6092	630	166
545	FHM	High pressure filter with intermediate manifold construction	320	4641	400	106
563	FHB	High pressure for block mounting	320	4641	485	128
577	FHF	In-line manifold top mounting according to SAE J2066	350	5076	550	145
587	FHD	In-line duplex high pressure filter	350	5076	250	66
601	HPB	Pressure filter kits for integration in control manifolds	420	6092	300	79
727	CLOGGING INDICATORS					

610 page	STAINLESS STEEL HIGH PRESSURE FILTERS		up to P_{max} bar	psi	up to Q_{max} l/min	gpm
613	FZP	In-line pressure filter with threaded mount	420	6092	160	42
623	FZH	In-line pressure filter with threaded mount for higher pressure	700	10153	80	21
633	FZX	In-line pressure filter with threaded mount up to 1000 bar	1000	14504	10	3
641	FZM	Manifold top mounting	320	4641	70	18
649	FZB	Manifold side mounting	320	4641	70	18
657	FZD	Duplex pressure filter for continuous operation requirements	350	5076	60	16
728	CLOGGING INDICATORS					

668 page	FILTERS FOR POTENTIALLY EXPLOSIVE ATMOSPHERE		up to P_{max} bar	psi	up to Q_{max} l/min	gpm
671	FMMX	Typical high pressure filter for mobile applications, low flow rate	420	6092	300	79
681	FZP	In-line pressure filter with threaded mount	420	6092	160	42
691	FZH	In-line pressure filter with threaded mount for higher pressure	700	10153	80	21
701	FZX	In-line pressure filter with threaded mount up to 1000 bar	1000	14504	10	3
729	CLOGGING INDICATORS					

709 page	CLOGGING INDICATORS
714	QUICK REFERENCE GUIDE
718	DESIGNATION AND ORDERING CODES
730	TECHNICAL DATA

Our work is based on a skillful interaction between advanced technology and fine workmanship, **customizing products according to specific market requests**, focusing strongly on innovation and quality, and following every step in the manufacturing of both standard and special products, fully respecting customer expectations.

Our customer-oriented philosophy, which enables us to satisfy all customer requests **rapidly** and **with personalized products**, makes us a **dynamic and flexible enterprise**.
The possibility of constantly controlling and monitoring the entire production process is essential to allow us to guarantee the quality of our products.

WORLDWIDE PRESENCE

Scan or click me!

Our foreign Branches enable us to offer a diversified range of products that allow us to successfully face the aggressive challenge of international competition, and also to maintain a stable presence at a local level.

The Group boasts **9 business branches**

TECHNOLOGY

Our constant **quest for excellence in quality and technological innovation** allows us to offer only the best solutions and services for applications in many fields, including general industry, test rigs, lubrication, heavy engineering, renewable energies, naval engineering, offshore engineering, aviation systems, emerging technologies and mobile plant (i.e. tractors, excavators, concrete pumps, platforms).

AND PRODUCTION

Our high level of technological expertise means **we can rely entirely on our own resources, without resorting to external providers.** This in turn enables us to satisfy a growing number of customer requests, also exploiting our constantly updated range of machines and equipment, featuring **fully-automated workstations** capable of **24-hour production**.

SUCTION FILTERS

Mounting:
- Tank immersed
- In-Line
- In tank with shut off valve
- In tank with flooded suction

RETURN FILTERS

Mounting:
- In-Line
- Tank top
- In single and duplex designs

RETURN / SUCTION FILTERS

Mounting:
- In-Line
- Tank top

SPIN-ON FILTERS

Mounting:
- In-Line
- Tank top

LOW & MEDIUM PRESSURE FILTERS

Mounting:
- In-Line
- Parallel manifold version
- In single and duplex designs

HIGH PRESSURE FILTERS

Mounting:
- In-Line
- Manifold
- In single and duplex designs

PRODUCT RANGE

MP Filtri can offer a vast and articulated range of products for the global market, suitable for all industrial sectors using hydraulic equipment.

This includes filters (suction, return, return/suction, spin-on, pressure, stainless steel pressure, ATEX filters) and structural components (motor/pump bell-housings, transmission couplings, damping rings, foot brackets, aluminium tanks, cleaning covers).

We can provide all the skills and solutions required by the modern hydraulics industry to monitor contamination levels and other fluid conditions.

Mobile filtration units and a full range of accessories allow us to supply everything necessary for a complete service in the hydraulic circuits.

STAINLESS STEEL HIGH PRESSURE FILTERS

Mounting:
- In-Line
- Manifold
- In single and duplex designs

FILTERS FOR POTENTIALLY EXPLOSIVE ATMOSPHERE

Mounting:
- In-Line

CONTAMINATION CONTROL SOLUTIONS

- Off-line, in-line particle analyser
- Off-line bottle sampling products
- Fully calibrated using relevant ISO standards
- A wide range of variants to support fluid types and communication protocols
- Mobile FIltration Units with flow rates from 15 l/min up to 200 l/min

POWER TRANSMISSION PRODUCTS

- Aluminium bell-housings for motors from 0.12 kW to 400 kW
- Couplings in Aluminium Cast Iron - Steel
- Damping rings
- Foot bracket
- Aluminium tanks
- Cleaning covers

TANK ACCESSORIES

- Oil filler and air breather plugs
- Optical and electrical level gauges
- Pressure gauge valve selectors
- Pipe fixing brackets
- Pressure gauges

CONTAMINATION MANAGEMENT

INDEX

		Page
1	HYDRAULIC FLUIDS	12
2	FLUIDS CONTAMINATION	12
3	FLUIDS COMPATIBILITY CHART	12
4	EFFECTS OF CONTAMINATION ON HYDRAULIC COMPONENTS	13
5	MEASURING THE SOLID CONTAMINATION LEVEL	13
6	FILTRATION TECHNOLOGIES	16
7	RECOMMENDED CONTAMINATION CLASSES	17
8	TYPES OF FILTERS	17
9	FILTER SIZING PARAMETERS	18
10	APPLICABLE STANDARDS FOR FILTER DEVELOPMENT	18
11	WATER IN HYDRAULIC AND LUBRICATING FLUIDS	19
12	THE ANTI-STATIC FILTERS zerospark	20

1 HYDRAULIC FLUIDS

The fluid is the vector that transmits power, energy within an oleodynamic circuit. In addition to transmitting energy through the circuit, it also performs additional functions such as lubrication, protection and cooling of the surfaces.
The classification of fluids used in hydraulic systems is coded in many regulatory references, different Standards.

The most important classification system for hydraulic fluids is the one defined by International Organization for Standardization (ISO), which established a classification system within their standard: "ISO 6743-4 Lubricants, Industrial Oils and Related Products" . In particular, the parts of interest for hydraulic fluids are:
- Lubricants, industrial oils and related products (class L)
- Classifications - Part 4L - Family H (Hydraulic systems)

The ISO 6743-4 classification system can be generally applied to the three primary classes of hydraulic fluids:

- Mineral Oils (i.e.: petroleum) Hydraulic Fluids (i.e.: HH: Mineral lubricants without corrosion inhibitors; HL: HH-type lubricants with oxidation reduction and anticorrosive additives; HM: HL-type lubricants with anti-wear additives; HV: HM-type lubricants with a higher viscosity grade and temperature properties; and others).

- Biodegradable Hydraulic Fluids (HExx), also defined as "Environmentally acceptable hydraulic fluids".

- Fire Resistant Hydraulic Fluids (HFxx), which could be further split into: Fire-resistant aqueous fluids (HFAx, HFB; HFC) ; Fire-resistant synthetic anhydrous fluids (HFDx).

The choice of fluid for an hydraulic system must take into account several parameters.
These parameters can adversely affect the performance of an hydraulic system, causing delay in the controls, pump cavitation, excessive absorption, excessive temperature rise, efficiency reduction, increased drainage, wear, jam/block or air intake in the plant.

The main properties that characterize hydraulic fluids and affect their choice are:
- DYNAMIC VISCOSITY
  It identifies the fluid's resistance to sliding due to the impact of the particles forming it.

- KINEMATIC VISCOSITY
  It is a widespread formal dimension in the hydraulic field.
  It is calculated with the ratio between the dynamic viscosity and the fluid density.
  Kinematic viscosity varies with temperature and pressure variations.

- VISCOSITY INDEX
  This value expresses the ability of a fluid to maintain viscosity when the temperature changes.
  A high viscosity index indicates the fluid's ability to limit viscosity variations by varying the temperature.

- FILTERABILITY INDEX
  It is the value that indicates the ability of a fluid to cross the filter materials.
  A low filterability index could cause premature clogging of the filter material.

- WORKING TEMPERATURE
  Working temperature affects the fundamental characteristics of the fluid.
  As already seen, some fluid characteristics, such as cinematic viscosity, vary with the temperature variation.
  When choosing a hydraulic oil, must therefore be taken into account of the environmental conditions in which the machine will operate.

- COMPRESSIBILITY MODULE
  Every fluid subjected to a pressure contracts, increasing its density.
  The compressibility module identifies the increase in pressure required to cause a corresponding increase in density.

- HYDROLYTIC STABILITY
  It is the characteristic that prevents galvanic pairs that can cause wear in the plant/system.

- ANTIOXIDANT STABILITY AND WEAR PROTECTION
  These features translate into the capacity of a hydraulic oil to avoid corrosion of metal elements inside the system.

- HEAT TRANSFER CAPACITY
  It is the characteristic that indicates the capacity of hydraulic oil to exchange heat with the surfaces and then cool them.

2 FLUID CONTAMINATION

Whatever the nature and properties of fluids, they are inevitably subject to contamination. Fluid contamination can have two origins:

- INITIAL CONTAMINATION
  Caused by the introduction of contaminated fluid into the circuit, or by incorrect storage, transport or transfer operations.

- PROGRESSIVE CONTAMINATION
  Caused by factors related to the operation of the system, such as metal surface wear, sealing wear, oxidation or degradation of the fluid, the introduction of contaminants during maintenance, corrosion due to chemical or electrochemical action between fluid and components, cavitation.
  The contamination of hydraulic systems can be of different nature:

- SOLID CONTAMINATION
  For example rust, slag, metal particles, fibers, rubber particles, paint particles or additives

- LIQUID CONTAMINATION
  For example, the presence of water due to condensation or external infiltration or acids

- GASEOUS CONTAMINATION
  For example, the presence of air due to inadequate oil level in the tank, drainage in suction ducts, incorrect sizing of tubes or tanks.

3 FLUID COMPATIBILITY CHARTS

For more detailed information on specific fluid compatibility please refer to the fluid compatibility charts on our website:

Scan or click me!

4 EFFECTS OF CONTAMINATION ON HYDRAULIC COMPONENTS

Solid contamination is recognized as the main cause of malfunction, failure and early degradation in hydraulic systems. It is impossible to delete it completely, but it can be effectively controlled by appropriate devices.

CONTAMINATION IN PRESENCE OF LARGE TOLERANCES

CONTAMINATION IN PRESENCE OF NARROW TOLERANCES

Solid contamination mainly causes surface damage and component wear.

- ABRASION OF SURFACES
  Cause of leakage through mechanical seals, reduction of system performance, failures.

- SURFACE EROSION
  Cause of leakage through mechanical seals, reduction of system performance, variation in adjustment of control components, failures.

- ADHESION OF MOVING PARTS
  Cause of failure due to lack of lubrication.

- DAMAGES DUE TO FATIGUE
  Cause of breakdowns and components breakdown.

ABRASION

EROSION

ADHESION

FATIGUE

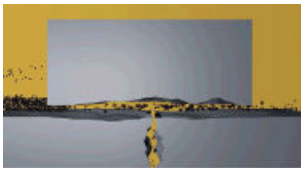

Liquid contamination mainly results in decay of lubrication performance and protection of fluid surfaces.

DISSOLVED WATER

- INCREASING FLUID ACIDITY
  Cause of surface corrosion and premature fluid oxidation
- GALVANIC COUPLE AT HIGH TEMPERATURES
  Cause of corrosion

FREE WATER - ADDITIONAL EFFECTS

- DECAY OF LUBRICANT PERFORMANCE
  Cause of rust and sludge formation, metal corrosion and increased solid contamination
- BATTERY COLONY CREATION
  Cause of worsening in the filterability feature
- ICE CREATION AT LOW TEMPERATURES
  Cause damage to the surface
- ADDITIVE DEPLETION
  Free water retains polar additives

Gaseous contamination mainly results in decay of system performance.

- CUSHION SUSPENSION
  Cause of increased noise and cavitation.
- FLUID OXIDATION
  Cause of corrosion acceleration of metal parts.
- MODIFICATION OF FLUID PROPERTIES
  (COMPRESSIBILITY MODULE, DENSITY, VISCOSITY)
  Cause of system's reduction of efficiency and of control.
  It is easy to understand how a system without proper contamination management is subject to higher costs than a system that is provided.
- MAINTENANCE
  Increase maintenance activities, spare parts, machine stop costs.
- ENERGY AND EFFICIENCY
  Efficiency and performance reduction due to friction, drainage, cavitation.

5 MEASURING THE SOLID CONTAMINATION LEVEL

The level of contamination of a system identifies the amount of contaminant contained in a fluid. This parameter refers to a unit volume of fluid.
The level of contamination may be different at different points in the system. From the information in the previous paragraphs it is also apparent that the level of contamination is heavily influenced by the working conditions of the system, by its working years and by the environmental conditions.

What is the size of the contaminating particles that we must handle in our hydraulic circuit?

HUMAN HAIR
(75 µm)

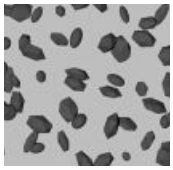

MINIMUM DIMENSION VISIBLE WITH HUMAN EYES
(40 µm)

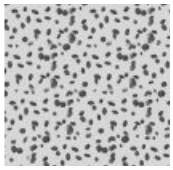

TYPICAL CONTAMINANT DIMENSION IN A HYDRAULIC CIRCUIT
(4 - 14 µm)

Contamination level analysis is significant only if performed with a uniform and repeatable method, conducted with standard test methods and suitably calibrated equipment. To this end, ISO has issued a set of standards that allow tests to be conducted and express the measured values in the following ways.

- GRAVIMETRIC LEVEL - ISO 4405

The level of contamination is defined by checking the weight of particles collected by a laboratory membrane. The membrane must be cleaned, dried and desiccated, with fluid and conditions defined by the Standard.
The volume of fluid is filtered through the membrane by using a suitable suction system. The weight of the contaminant is determined by checking the weight of the membrane before and after the fluid filtration.

CLEAN MEMBRANE

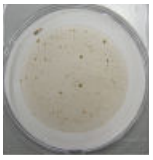

CONTAMINATED MEMBRANE

- CUMULATIVE DISTRIBUTION OF THE PARTICLES SIZE - ISO 4406

The level of contamination is defined by counting the number of particles of certain dimensions per unit of volume of fluid. Measurement is performed by Contamination Monitoring Products (CMP).
Following the count, the contamination classes are determined, corresponding to the number of particles detected in the unit of fluid.
The most common classification methods follow ISO 4406 and SAE AS 4059 (Aerospace Sector) regulations.
NAS 1638 is still used although obsolete.

Classification example according to ISO 4406

The International Standards Organization standard ISO 4406 is the preferred method of quoting the number of solid contaminant particles in a sample. The level of contamination is defined by counting the number of particles of certain dimensions per unit of volume of fluid. The measurement is performed by Contamination Monitoring Products (CMP).

The numbers represent a code which identifies the number of particles of certain sizes in 1ml of fluid. Each code number has a particular size range.
The first scale number represents the number of particles equal to or larger than 4 $\mu m_{(c)}$ per millilitre of fluid;
The second scale number represents the number of particles equal to or larger than 6 $\mu m_{(c)}$ per millilitre of fluid;
The third scale number represents the number of particles equal to or larger than 14 $\mu m_{(c)}$ per millilitre of fluid.

ISO 4406 - Allocation of Scale Numbers

Class	Number of particles per ml	
	Over	Up to
28	1 300 000	2 500 000
27	640 000	1 300 000
26	320 000	640 000
25	160 000	320 000
24	80 000	160 000
23	40 000	80 000
22	20 000	40 000
21	10 000	20 000
20	5 000	10 000
19	2 500	5 000
18	1 300	2 500
17	640	1 300
16	320	640
15	160	320
14	80	160
13	40	80
12	20	40
11	10	20
10	5	10
9	2.5	5
8	1.3	2.5
7	0.64	1.3
6	0.32	0.64
5	0.16	0.32
4	0.08	0.16
3	0.04	0.08
2	0.02	0.04
1	0.01	0.02
0	0	0.01

> 4 $\mu m_{(c)}$ = 350 particles
> 6 $\mu m_{(c)}$ = 100 particles
> 14 $\mu m_{(c)}$ = 25 particles
16 / 14 / 12

ISO 4406 Cleanliness Code System

Microscope counting examines the particles differently to Contamination Monitoring Products (CMP) and the code is given with two scale numbers only. These are at 5 µm and 15 µm equivalent to the 6 $\mu m_{(c)}$ and 14 $\mu m_{(c)}$ of Contamination Monitoring Products (CMP).

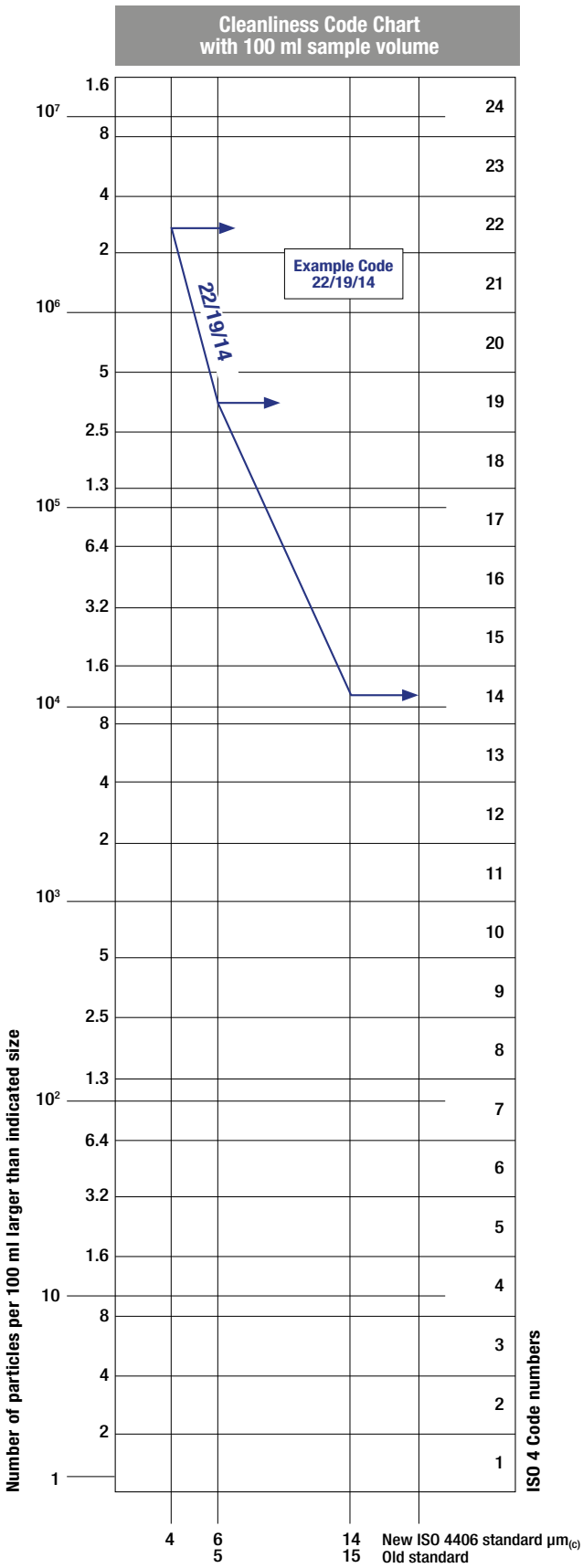

- CUMULATIVE DISTRIBUTION OF THE PARTICLES SIZE
  SAE AS4059-1 and SAE AS4059-2

Classification example according to SAE AS4059 - Rev. G

The code, prepared for the aerospace industry, is based on the size, quantity, and particle spacing in a 100 ml fluid sample. The contamination classes are defined by numeric codes, the size of the contaminant is identified by letters (A-F).

This SAE Aerospace Standard (AS) defines cleanliness levels for particulate contamination of hydraulic fluids and includes methods of reporting data relating to the contamination levels. Tables 1 and 2 below provide differential and cumulative particle counts respectively for counts obtained by an automatic particle counter, e.g. LPA3.

Table 1 - Class for differential measurement

Class	Dimension of contaminant Maximum Contamination Limits per 100 ml					
	5-15 µm	15-25 µm	25-50 µm	50-100 µm	>100 µm	(1)
	6-14 $\mu m_{(c)}$	14-21 $\mu m_{(c)}$	21-38 $\mu m_{(c)}$	38-70 $\mu m_{(c)}$	>70 $\mu m_{(c)}$	(2)
00	125	22	4	1	0	
0	250	44	8	2	0	
1	500	89	16	3	1	
2	1 000	178	32	6	1	
3	2 000	356	63	11	2	
4	4 000	712	126	22	4	
5	8 000	1 425	253	45	8	
6	16 000	2 850	506	90	16	
7	32 000	5 700	1 012	180	32	
8	64 000	11 400	2 025	360	64	
9	128 000	22 800	4 050	720	128	
10	256 000	45 600	8 100	1 440	256	
11	512 000	91 200	16 200	2 880	512	
12	1 024 000	182 400	32 400	5 760	1 024	

6 - 14 $\mu m_{(c)}$ = 15 000 particles
14 - 21 $\mu m_{(c)}$ = 2 200 particles
21 - 38 $\mu m_{(c)}$ = 200 particles
38 - 70 $\mu m_{(c)}$ = 35 particles
> 70 $\mu m_{(c)}$ = 3 particles
SAE AS4059 REV G - Class 6

(1) Size range, optical microscope, based on longest dimension as measured per AS598 or ISO 4407. **(2)** Size range CMP calibrated per ISO 11171 or an optical or electron microscope with image analysis software, based on projected area equivalent diameter. **(3)** Contamination classes and particle count limits are identical to NAS 1638.

Table 2 - Class for cumulative measurement

Class	Dimension of contaminant Maximum Contamination Limits per 100 ml						
	>1 µm	>5 µm	>15 µm	>25 µm	>50 µm	>100 µm	(1)
	>4 $\mu m_{(c)}$	>6 $\mu m_{(c)}$	>14 $\mu m_{(c)}$	>21 $\mu m_{(c)}$	>38 $\mu m_{(c)}$	>70 $\mu m_{(c)}$	(2)
000	195	76	14	3	1	0	
00	390	152	27	5	1	0	
0	780	304	54	10	2	0	
1	1 560	609	109	20	4	1	
2	3 120	1 217	217	39	7	1	
3	6 250	2 432	432	76	13	2	
4	12 500	4 864	864	152	26	4	
5	25 000	9 731	1 731	306	53	8	
6	50 000	19 462	3 462	612	106	16	
7	100 000	38 924	6 924	1 224	212	32	
8	200 000	77 849	13 849	2 449	424	64	
9	400 000	155 698	27 698	4 898	848	128	
10	800 000	311 396	55 396	9 796	1 696	256	
11	1 600 000	622 792	110 792	19 592	3 392	512	
12	3 200 000	1 245 584	221 584	39 184	6 784	1 024	

> 4 $\mu m_{(c)}$ = 45 000 particles
> 6 $\mu m_{(c)}$ = 15 000 particles
> 14 $\mu m_{(c)}$ = 1 500 particles
> 21 $\mu m_{(c)}$ = 250 particles
> 38 $\mu m_{(c)}$ = 15 particles
> 70 $\mu m_{(c)}$ = 3 particle
SAE AS4059 REV G
cpc* Class 6 6/6/5/5/4/2

* cumulative particle count

(1) Size range, optical microscope, based on longest dimension as measured per AS598 or ISO 4407. **(2)** Size range, CMP calibrated per ISO 11171 or an optical or electron microscope with image analysis software, based on projected area equivalent diameter. **(3)** Contamination classes and particle count limits are identical to NAS 1638.

- CLASSES OF CONTAMINATION ACCORDING TO NAS 1638 (January 1964)

The NAS system was originally developed in 1964 to define contamination classes for the contamination contained within aircraft components.
The application of this standard was extended to industrial hydraulic systems simply because nothing else existed at the time.
The coding system defines the maximum numbers permitted of 100 ml volume at various size intervals (differential counts) rather than using cumulative counts as in ISO 4406. Although there is no guidance given in the standard on how to quote the levels, most industrial users quote a single code which is the highest recorded in all sizes and this convention is used on MP Filtri Contamination Monitoring Products (CMP).

The contamination classes are defined by a number (from 00 to 12) which indicates the maximum number of particles per 100 ml, counted on a differential basis, in a given size bracket.

Size Range Classes (in microns)

Maximum Contamination Limits per 100 ml					
Class	5-15	15-25	25-50	50-100	>100
00	125	22	4	1	0
0	250	44	8	2	0
1	500	89	16	3	1
2	1 000	178	32	6	1
3	2 000	356	63	11	2
4	4 000	712	126	22	4
5	8 000	1 425	253	45	8
6	16 000	2 850	506	90	16
7	32 000	5 700	1 012	180	32
8	64 000	11 400	2 025	360	64
9	128 000	22 800	4 050	720	128
10	256 000	45 600	8 100	1 440	256
11	512 000	91 200	16 200	2 880	512
12	1 024 000	182 400	32 400	5 760	1 024

5-15 µm = 42 000 particles
15-25 µm = 2 200 particles
25-50 µm = 150 particles
50-100 µm = 18 particles
> 100 µm = 3 particles
Class NAS 8

- CUMULATIVE DISTRIBUTION OF THE PARTICLES SIZE - ISO 4407

The level of contamination is defined by counting the number of particles collected by a laboratory membrane per unit of fluid volume. The measurement is done by a microscope. The membrane must be cleaned, dried and desiccated, with fluid and conditions defined by the Standard. The fluid volume is filtered through the membrane, using a suitable suction system.
The level of contamination is identified by dividing the membrane into a predefined number of areas and by counting the contaminant particles using a suitable laboratory microscope.

MICROSCOPE CONTROL AND MEASUREMENT

Example figure 1and 2

COMPARISON PHOTOGRAPH'S
1 graduation = 10µm

Fig. 1

Fig. 2

For other comparison photographs for contamination classes see the "*Filtration and Particle Analyser Handbook*".

Scan or click me!

- CLEANLINESS CODE COMPARISON

Although ISO 4406 standard is being used extensively within the hydraulics industry other standards are occasionally required and a comparison may be requested. The table below gives a very general comparison but often no direct comparison is possible due to the different classes and sizes involved.

ISO 4406	SAE AS4059 Table 2	SAE AS4059 Table 1	NAS 1638
> 4 $\mu m_{(c)}$ 6 $\mu m_{(c)}$ 14 $\mu m_{(c)}$	> 4 $\mu m_{(c)}$ 6 $\mu m_{(c)}$ 14 $\mu m_{(c)}$	4-6 6-14 14-21 21-38 38-70 >70	5-15 15-25 25-50 50-100 >100
23 / 21 / 18	13A / 12B / 12C	12	12
22 / 20 / 17	12A / 11B / 11C	11	11
21 / 19 / 16	11A / 10B / 10C	10	10
20 / 18 / 15	10A / 9B / 9B	9	9
19 / 17 / 14	9A / 8B / 8C	8	8
18 / 16 / 13	8A / 7B / 7C	7	7
17 / 15 / 12	7A / 6B / 6C	6	6
16 / 14 / 11	6A / 5B / 5C	5	5
15 / 13 / 10	5A / 4B / 4C	4	4
14 / 12 / 09	4A / 3B / 3C	3	3

6 FILTRATION TECHNOLOGIES

Various mechanisms such as mechanical stoppage, magnetism, gravimetric deposit, or centrifugal separation can be used to reduce the level of contamination.
The mechanical stoppage method is most effective and can take place in two ways:

- SURFACE FILTRATION
  It is by direct interception. The filter prevents particles larger than the pores from continuing in the plant / system. Surface filters are generally manufactured with metal canvases or meshes.

- DEPTH FILTERING
  Filters are constructed by fiber interlacing. Such wraps form pathways of different shapes and sizes in which the particles remain trapped when they find smaller apertures than their diameter.
  Depth filters are generally produced with papers impregnated with phenolic resins, metal fibers or inorganic fibers.
  In inorganic fiber filtration, commonly called microfibre, the filtering layers are often overlapped in order to increase the ability to retain the contaminant.

WIRE MESH FILTRATION

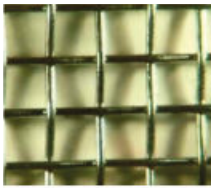

PAPER FILTRATION

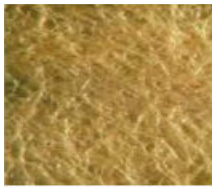

MICROFIBER FILTRATION

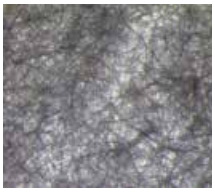

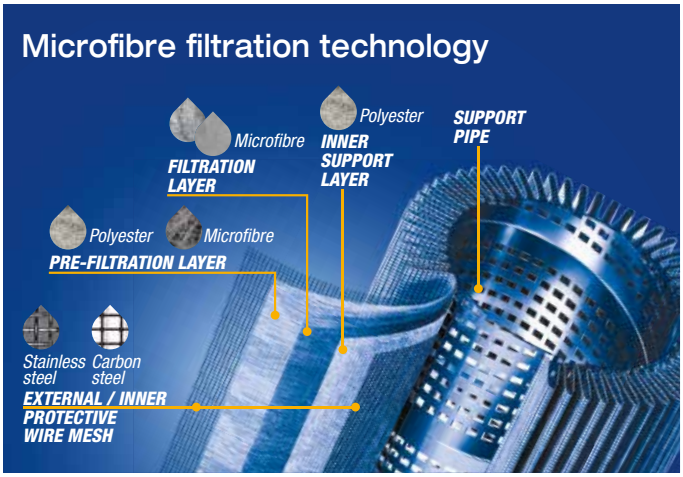

The filtration efficiency of metallic mesh filtrations is defined as the maximum particle size that can pass through the meshes of the filtering grid.
The efficiency of microfibre and paper filtration ($\beta_{x(c)}$) is defined through a lab test called Multipass Test. The efficiency value ($\beta_{x(c)}$) is defined as the ratio between the number of particles of certain dimensions detected upstream and downstream of the filter.

$$\frac{\text{Upstream particles number} > X\ \mu m_{(c)}}{\text{Downstream particles number} > X\ \mu m_{(c)}} = \beta_{x(c)}$$

Value ($\beta_{x(c)}$)	2	10	75	100	200	1000
Efficiency	50%	90%	98.7%	99%	99.5%	99.9%

Test conditions, such as type of fluid to be used (MIL-H-5606), type of contaminant to be used (ISO MTD), fluid viscosity, test temperature, are determined by ISO 16889.
In addition to the filtration efficiency value during the Multipass test, other important features, such as filtration stability (β stability) and dirt holding capacity (DHC), are also tested.
Poor filtration stability is the cause of the filtering quality worsening as the filter life rises. Low dirt holding capacity causes a reduction in the life of the filter.

Filtration ISO Standard Comparison		
$\beta_{x(c)}$ > 1000 ISO 16889	β_x > 200 ISO 4572	MP Filtri Filter media code
5 $\mu m_{(c)}$	3 µm	A03
7 $\mu m_{(c)}$	6 µm	A06
10 $\mu m_{(c)}$	10 µm	A10
16 $\mu m_{(c)}$	18 µm	A16
21 $\mu m_{(c)}$	25 µm	A25

7 RECOMMENDED CONTAMINATION CLASSES

Any are the nature and the properties of fluids, they are inevitably subject to contamination. The level of contamination can be managed by using special components called filters.
Hydraulic components builders, knowing the problem of contamination, recommend the filtration level appropriate to the use of their products.

Example of recommended contamination levels for pressures below 140 bar.

Piston pumps with fixed flow rate	•					
Piston pumps with variable flow rate			•			
Vane pumps with fixed flow rate		•				
Vane pumps with variable flow			•			
Engines	•					
Hydraulic cylinders	•					
Actuators					•	
Test benches						•
Check valve	•					
Directional valves	•					
Flow regulating valves	•					
Proportional valves				•		
Servo-valves					•	
Flat bearings			•			
Ball bearings				•		
ISO 4406 CODE	20/18/15	19/17/14	18/16/13	17/15/12	16/14/11	15/13/10
Recommended filtration $\beta_{x(c)} \geq 1.000$	$\beta_{21(c)}$ >1000	$\beta_{15(c)}$ >1000	$\beta_{10(c)}$ >1000	$\beta_{7(c)}$ >1000	$\beta_{7(c)}$ >1000	$\beta_{5(c)}$ >1000
MP Filtri media code	A25	A16	A10	A06	A06	A03

The common classification of filters is determined by their position in the plant.

8 TYPES OF FILTERS

Suction filters
They are positioned before the pump and are responsible for protecting the pump from dirty contaminants. It also provides additional flow guidance to the pump suction line.
Being subject to negligible working pressures are manufactured with simple and lightweight construction.
They are mainly produced with gross grade surface filtrations, mainly 60 ÷ 125 µm.
They can be equipped with a magnetic filter for retaining ferrous particles.
They are generally placed under the fluid head to take advantage of the piezometric thrust of the fluid and reduce the risk of cavitation.

There are two types of suction filters:
- IMMERSION FILTERS
  Simple filter element screwed on the suction pipe

- FILTERS WITH CONTAINER
  Container filters that are more bulky, but provide easier maintenance of the tank

Delivery (or Pressure) filters
They are positioned between the pump and most sensitive regulating and controlling components, such as servo valves or proportional valves, and are designed to ensure the class of contamination required by the components used in the circuit.
Being subjected to high working pressures are manufactured with more robust and articulated construction. In particular situations of corrosive environments or aggressive fluids can be made of stainless steel.
They are mainly produced with filtering depths of 3 ÷ 25 µm.
They can be manufactured with in-line connections, with plate or flange connections or directly integrated into the circuit control blocks / manifolds.
They can also be manufactured in duplex configuration to allow the contaminated section to be maintained even when the plant / system is in operation without interruption of the working cycle.

Return filters
They are positioned on the return line to the tank and perform the task of filtering the fluid from particles entering the system from the outside or generated by the wear of the components.
They are generally fixed to the reservoir (for this reason also called top tank mounted), positioned semi-immersed or completely immersed.
The positioning of the return filters must guarantee in all operating conditions that the fluid drainage takes place in immersed condition; this is to avoid creating foams in the tank that can cause malfunctions or cavitation in the pumps.
For the sizing of the return filters, account must be taken of the presence of accumulators or cylinders that can make the return flow considerably greater than the pump suction flow rate.
Being subject to contained working pressures are manufactured with simple and lightweight construction.
Normally it is possible to extract the filter element without disconnecting the filter from the rest of the system.

Combined filters
They are designed to be applied to systems with two or more circuits. They are commonly used in hydrostatic transmission machines where they have a dual filtration function of the return line and suction line of the hydrostatic transmission pump.
The filter is equipped with a valve that keeps the 0.5 bar pressure inside the filter. A portion of the fluid that returns to the tank is filtered by the return filter element, generally produced with absolute filtration, and returns to the transmission booster pump.
Only excess fluid returns to the tank through the valve.
The internal pressure of the filter and the absolute filtration help to avoid the cavitation phenomenon inside the pump.

Off-line filters
They are generally used in very large systems / plants, placed in a closed circuit independent from the main circuit. They remain in operation regardless of the operation of the main circuit and are crossed by a constant flow rate.
They can also be manufactured in duplex configuration to allow the contaminated section to be maintained even when the unit is in operation without interruption of the work cycle.

Venting filters
During the operation of the plants, the fluid level present in the reservoir changes continuously.
The result of this continuous fluctuation is an exchange of air with the outside environment.
The venting filter function, positioned on the tank, is to filter the air that enters the tank to compensate for fluid level variations.

9 FILTER SIZING PARAMETERS

The choice of the filter system for an hydraulic system is influenced by several factors.
It is necessary to consider the characteristics of the various components present in the plant and their sensitivity to contamination.

It is also necessary to consider all the tasks that the filter will have to do within the plant:
- FLUID PROTECTION FROM CONTAMINATION
- PROTECTION OF OLEODYNAMIC COMPONENTS SENSITIVE TO CONTAMINATION
- PROTECTION OF OLEODYNAMIC PLANTS FROM ENVIRONMENTAL WASTE
- PROTECTION OF OLEODYNAMIC PLANTS FROM CONTAMINATION CAUSED BY COMPONENTS' FAILURES

The advantages of proper positioning and sizing of the filters are
- MORE RELIABILITY OF THE SYSTEM
- LONGER LIFE OF THE FLUID COMPONENTS
- REDUCTION OF STOP TIME
- REDUCTION OF FAILURE CASUALITIES

Each hydraulic filter is described by general features that identify the possibility of use in different applications.

- *MAXIMUM WORKING PRESSURE (Pmax)*
  The maximum working pressure of the filter must be greater than or equal to the pressure of the circuit section in which it will be installed.

- *PRESSURE DROP (ΔP)*
  The pressure drop depends on a number of factors, such as the working circuit temperature, the fluid viscosity, the filter element cleaning condition.

- *WORKING TEMPERATURE (T)*
  The working temperature deeply affect the choice of materials. Excessively high or low temperatures may adversely affect the strength of the materials or the characteristics of the seals.

- *FILTRATION EFFICIENCY (%) / FILTRATION RATIO ($ß_{x(c)}$)*
  Filtration efficiency is the most important parameter to consider when selecting a filter.
  When choosing the filtration performances, the needs of the most sensitive components in the system must be considered.

- *FLUID TYPE*
  The type of fluid influences the choice of filters in terms of compatibility and viscosity. It is always mandatory to check the filterability.

- *PLACEMENT IN THE PLANT*
  The position of the filter in the system conditions the efficiency of all filter performances.

10 APPLICABLE STANDARDS FOR FILTER DEVELOPMENT

In order to obtain unique criteria for development and verification of the filters performance, specific regulations for the filters and filter elements testing have been issued by ISO. These norms describe the target, the methodology, the conditions and the presentation methods for the test results.

ISO 2941
Hydraulic fluid power -- Filter elements -- Verification of collapse/burst pressure rating
This Standard describes the method for testing the collapse / burst resistance of the filter elements.
The test is performed by crossing the contaminated fluid filter element at a predefined flow rate. The progressive clogging of the filter element, determined by contamination, causes an increase in differential pressure.

ISO 2942
Hydraulic fluid power -- Filter elements -- Verification of fabrication integrity and determination of the first bubble point
This Standard describes the method to verify the integrity of the assembled filter elements.
It can be used to verify the quality of the production process or the quality of the materials by verifying the pressure value of the first bubble point.

ISO 2943
Hydraulic fluid power -- Filter elements -- Verification of material compatibility with fluids
This Standard describes the method to verify the compatibility of materials with certain hydraulic fluids.
The test is carried out by keeping the element (the material sample) immersed in the fluid under high or low temperature conditions for a given period of time and verifying the retention of the characteristics.

ISO 3723
Hydraulic fluid power -- Filter elements -- Method for end load test
This Standard describes the method for verifying the axial load resistance of the filter elements.
After performing the procedure described in ISO 2943, the designed axial load is applied to the filter element. To verify the test results, then the test described in ISO 2941 is performed.

ISO 3968
Hydraulic fluid power -- Filters -- Evaluation of differential pressure versus flow characteristics
This Standard describes the method for checking the pressure drop across the filter.
The test is carried out by crossing the filter from a given fluid and by detecting upstream and downstream pressures.
Some of the parameters defined by the Standard are the fluid, the test temperature, the size of the tubes, the position of the pressure detection points.

ISO 16889
Hydraulic fluid power -- Filters -- Multi-pass method for evaluating filtration performance of a filter element
This Standard describes the method to check the filtration characteristics of the filter elements.
The test is performed by constant introduction of contaminant (ISO MTD).
The characteristics observed during the test are the filtration efficiency and the dirty holding capacity related to the differential pressure.

ISO 23181

Hydraulic fluid power -- Filter elements -- Determination of resistance to flow fatigue using high viscosity fluid

This Standard describes the method for testing the fatigue resistance of the filter elements. The test is carried out by subjecting the filter to continuous flow variations, thus differential pressure, using a high viscosity fluid.

ISO 11170

Hydraulic fluid power -- Sequence of tests for verifying performance characteristics of filter elements

The Standard describes the method for testing the performance of filter elements. The protocol described by the regulations provides the sequence of all the tests described above in order to verify all the working characteristics (mechanical, hydraulic and filtration).

ISO 10771-1

Hydraulic fluid power -- Fatigue pressure testing of metal pressure-containing envelopes -- Test method

This Standard describes the method to check the resistance of the hydraulic components with pulsing pressure.
It can be applied to all metal components (excluding tubes) subject to cyclic pressure used in the hydraulic field.

11 WATER IN HYDRAULIC AND LUBRICATING FLUIDS

Water Content

In mineral oils and non aqueous resistant fluids water is undesirable. Mineral oil usually has a water content of 50-300 ppm (@40°C) which it can support without adverse consequences.
Once the water content exceeds about 300ppm the oil starts to appear hazy. Above this level there is a danger of free water accumulating in the system in areas of low flow. This can lead to corrosion and accelerated wear.
Similarly, fire resistant fluids have a natural water which may be different to mineral oil.

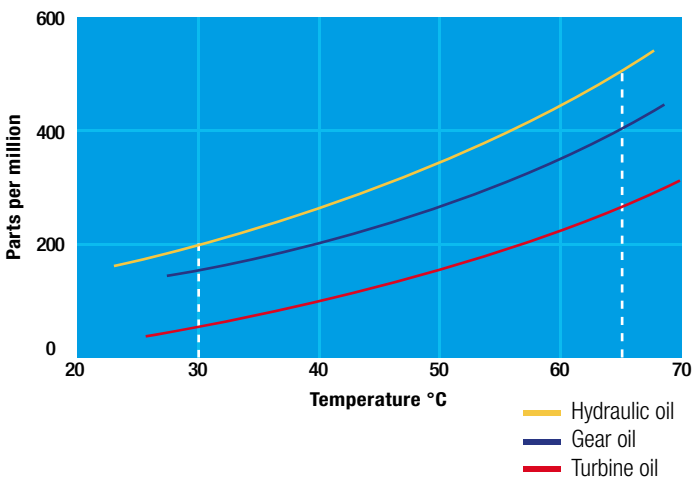

Saturation Levels

Since the effects of free (also emulsified) water is more harmful than those of dissolved water, water levels should remain well below the saturation point.

However, even water in solution can cause damage and therefore every reasonable effort should be made to keep saturation levels as low as possible. There is no such thing as too little water. As a guideline, we recommend maintaining saturation levels below 50% in all equipment.

TYPICAL WATER SATURATION LEVEL FOR NEW OILS
Examples:
Hydraulic oil @ 30°C = 200 ppm = 100% saturation
Hydraulic oil @ 65°C = 500 ppm = 100% saturation

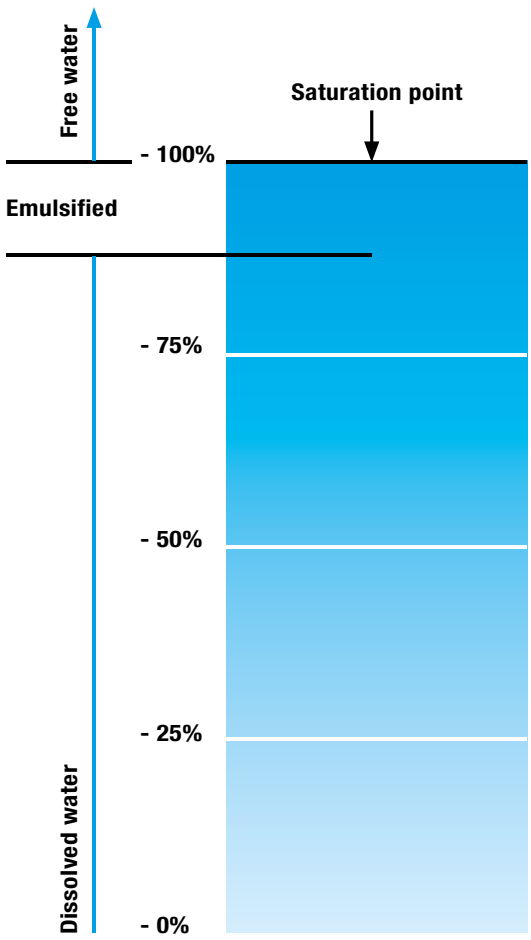

WATER REMOVAL

Water is present everywhere, during storage, handling and servicing.

MP Filtri filter elements feature an absorbent media which protects hydraulic systems from both particulate and water contamination.
MP Filtri's filter element technology is available with inorganic microfiber media with a filtration rating 25 µm (therefore identified with media designation WA025), providing absolute filtration of solid particles to $\beta_{x(c)} = 1000$.
Absorbent media is made by water absorbent fibres which increase in size during the absorption process.
Free water is thus bonded to the filter media and completely removed from the system (it cannot even be squeezed out).

Filter Media

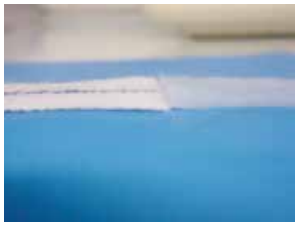

Fabric that absorbs water

Absorber media layer

The Filter Media has absorbed water

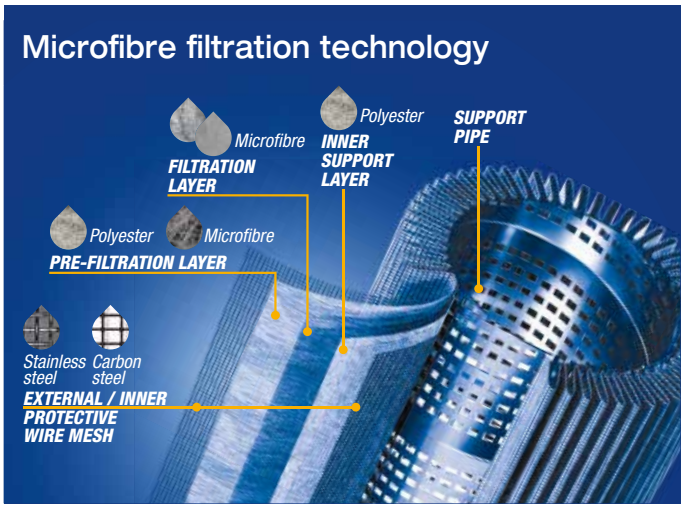

By removing water from your fluid power system, you can prevent such key problems as:
- corrosion (metal etching)
- loss of lubricant power
- accelerated abrasive wear in hydraulic components
- valve-locking
- bearing fatigue
- viscosity variance (reduction in lubricating properties)
- additive precipitation and oil oxidation
- increase in acidity level
- increased electrical conductivity (loss of dielectric strength)
- slow/weak response of control systems

For more details please refer to our dedicate brochure "WATER REMOVAL"

Scan or click me!

12 THE ANTI-STATIC FILTERS

zerospark®

zerospark is a specialist solution designed to solve the problem of electrostatic discharge inside hydraulic filters. Caused by the electrical charge build-up due to the passage of oil through the filters, this can result in damage to filter elements, oils and circuit components. It can even cause fire hazards in environments where flammable materials are present.

THE TRIBOELECTRIC EFFECT
The body with the most electronegativity strips electrons from the other, generating a build-up of a net negative charge on itself. The other body is charged by the same amount but with the opposite sign, giving rise to very high potential differences. These, if not dissipated, can give rise to electrostatic discharges.

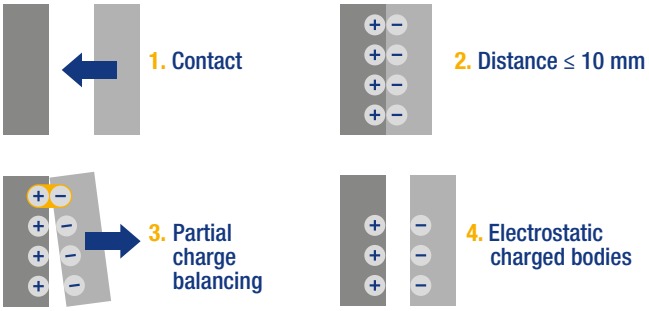

For more details please refer to our dedicate brochure "ZEROSPARK"

Scan or click me!

FILTER SIZING

INDEX

	Page
CALCULATION	22
FILTERS SIZING SOFTWARE	29

THE CORRECT FILTER SIZING HAS TO BE BASED ON THE TOTAL PRESSURE DROP DEPENDING ON THE APPLICATION.
FOR EXAMPLE, THE MAXIMUM TOTAL PRESSURE DROP ALLOWED BY A NEW AND CLEAN RETURN FILTER HAS TO BE IN THE RANGE 0.4 - 0.6 bar / 5.80 - 8.70 psi.

The pressure drop calculation is performed by adding together the value of the housing with the value of the filter element. The pressure drop Δpc of the housing is proportional to the fluid density (kg/dm³ / lb/ft³).
The filter element pressure drop Δpe is proportional to its viscosity (mm²/s / SUS), the corrective factor Y have to be used in case of an oil viscosity different than 30 mm²/s (cSt) / 150 SUS.

Sizing data for single filter element, head at top

Δpc = Filter housing pressure drop [bar / psi]
Δpe = Filter element pressure drop [bar / psi]
Y = Corrective factor Y (see correspondent table), depending on the filter type, on the filter element size, on the filter element length and on the filter media
Q = flow rate (l/min - gpm)
V1 reference oil viscosity = 30 mm²/s (cSt) /150 SUS
V2 = operating oil viscosity in mm²/s (cSt) / SUS

Filter element pressure drop calculation with an oil viscosity different than 30 mm²/s (cSt) / 150 SUS

International system:
Δpe = Y : 1000 x Q x (V2:V1)

Imperial system:
Δpe = Y : 17.2 x Q x (V2:V1)

Δp Tot. = Δpc + Δpe

Verification formula

Δp Tot. ≤ Δp max allowed

Maximum total pressure drop (Δp max) allowed by a new and clean filter

Filter family	Δp max	
	[bar]	[psi]
Suction	0.08 bar	1.15 psi
Return	0.50 bar	7.25 psi
Return - Suction (*)	1.50 bar	22.00 psi
Low & Medium Pressure/Duplex	0.70 bar	10.15 psi
High Pressure Pressure/Duplex	1.50 bar	22.00 psi
Stainless Steel	1.50 bar	22.00 psi
ATEX	1.50 bar	22.00 psi

(*) The suction flow rate should not exceed 30% of the return flow rate

Filter pressure drop calculation example

Application data:
Selected filter: tank top return filter - MPT110 series with bypass valve and G 1 1/4" inlet connection.

Selected filter element: **MF100 length 4**
Required filtration efficiency = **25 µm** absolute filtration with microfibre
Pressure Pmax = 10 bar / 145.03 psi
Flow rate Q = 120 l/min / 31.7 gpm
Viscosity V2 = 46 mm²/s (cSt) / 216 SUS
Oil density = 0.86 kg/dm³ / 53.68 lb/ft³

Calculation:
Δpc = 0.03 bar / 0.43 psi (see graphic below)

MPT 110 - Length 3 - 4

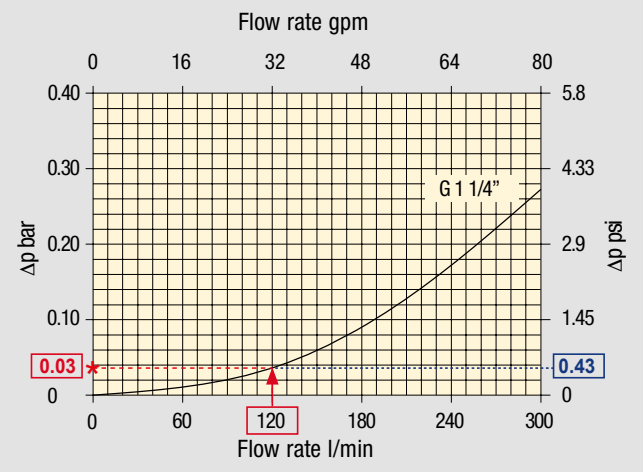

Filter housings Δp pressure drop.
The curves are plotted using mineral oil with density of 0.86 kg/dm³ in compliance with ISO 3968. Δp varies proportionally with density.

Filter element		Absolute filtration H Series					Nominal filtration N Series		
Type		A03	A06	A10	A16	A25	P(00)10	P(00)25	M(00)25 M(00)60 M(00)90
Return filters		74.00	50.08	20.00	16.00	9.00	6.43	5.51	4.40
MF 020	2	29.20	24.12	8.00	7.22	5.00	3.33	2.85	2.00
	3	22.00	19.00	6.56	5.33	4.33	1.68	1.44	1.30
MF 030 MFX 030	1	74.00	50.08	20.00	16.00	9.00	6.43	5.51	3.40
MF 100 MFX 100	1	28.20	24.40	8.67	8.17	6.88	4.62	3.96	1.25
	2	17.33	12.50	6.86	5.70	4.00	3.05	2.47	1.10
	3	10.25	9.00	3.65	3.33	2.50	1.63	1.32	0.96
	4	6.10	5.40	2.30	2.20	2.00	1.19	0.96	0.82

Δpe = (2.00 : 1000) x 120 x (46 : 30) = 0.37 bar
Δpe = (2.00 : 17.2) x 32 x (216 : 150) = 5.36 psi

√ **Δp Tot. = 0.03 + 0.37 = 0.4 bar**
Δp Tot. = 0.43 + 5.36 = 5.79 psi

The selection is correct because the total pressure drop value is inside the admissible range for top tank return filters.
In case the max allowed total pressure drop is not verified, it is necessary to repeat the calculation changing the filter and/or filter element length/size.

SUCTION FILTERS

Filter element		Nominal filtration Filter element ΔP Series : A - C					
Type	Length	P0010	P0025	M0025	M0060	M0090	M0250
SMC 250	10	0.65	0.20	0.10	0.08	0.05	0.03
SSC 503	10	-	-	0.17	0.11	0.11	0.11
SSC 504	10	-	-	0.11	0.08	0.08	0.08
SSC 505	10	-	-	0.23	0.18	0.18	0.18
SSC 510	10	-	-	0.18	0.14	0.14	0.14
SSC 535	10	-	-	0.08	0.05	0.05	0.05
SSC 540	10	-	-	0.05	0.04	0.04	0.04
FEX 060	10	4.58	3.22	1.02	0.89	0.63	0.63
	20	1.97	1.38	0.62	0,45	0.29	0.29
FEX 110	10	1.33	1.12	0.22	0.18	0.14	0.14
	20	0.90	0.76	0.15	0.10	0.09	0.09

RETURN FILTERS

Filter element		Absolute filtration Filter element ΔP Series: H					Nominal filtration Filter Element ΔP Series: N		
Type	Length	A03	A06	A10	A16	A25	P10	P25	M25 - M60 - M90
MF 020	1	74.00	50.08	20.00	16.00	9.00	6.43	5.51	4.40
	2	29.20	24.12	8.00	7.22	5.00	3.33	2.85	2.00
	3	22.00	19.00	6.56	5.33	4.33	1.68	1.44	1.30
MFX 030 MF 030	1	74.00	50.08	20.00	16.00	9.00	6.43	5.51	3.40
MF 100 MFX 100	1	28.20	24.40	8.67	8.17	6.88	4.62	3.96	1.25
	2	17.33	12.50	6.86	5.70	4.00	3.05	2.47	1.10
	3	10.25	9.00	3.65	3.33	2.50	1.63	1.32	0.96
	4	6.10	5.40	2.30	2.20	2.00	1.19	0.96	0.82
MF 180 MFX 180	1	3.67	3.05	1.64	1.56	1.24	1.18	1.06	0.26
	2	1.69	1.37	0.68	0.54	0.51	0.43	0.39	0.12
MF 190 MFX 190	2	1.69	1.37	0.60	0.49	0.44	0.35	0.31	0.11
MF 400 MFX 400	1	3.20	2.75	1.39	1.33	1.06	0.96	0.87	0.22
	2	2.00	1.87	0.88	0.85	0.55	0.49	0.45	0.13
	3	1.90	1.60	0.63	0.51	0.49	0.39	0.35	0.11
MF 750 MFX 750	1	1.08	0.84	0.49	0.36	0.26	0.21	0.19	0.06
MLX 250	2	3.00	3.04	1.46	1.25	1.17	-	-	M25 0.20
MLX 660	2	1.29	1.26	0.52	0.44	0.38	-	-	M25 0.10
CU 025		78.00	48.00	28.00	24.00	9.33	9.33	8.51	1.25
CU 040		25.88	20.88	10.44	10.00	3.78	3.78	3.30	1.25
CU 100		15.20	14.53	5.14	4.95	2.00	2.00	0.17	1.10
CU 250		3.25	2.55	1.55	1.35	0.71	0.71	0.59	0.25
CU 630		1.96	1.68	0.85	0.72	0.24	0.42	0.36	0.09
CU 850		1.06	0.84	0.42	0.33	0.17	0.17	0.13	0.04

TO BE CONTINUED >>

Corrective factor Y to be used for the filter element pressure drop calculation. The values depend to the filter size and length and to the filter media.
Reference oil viscosity 30 mm^2/s

FILTER SIZING Corrective factor

RETURN FILTERS

Filter element		Absolute filtration Filter element ΔP Series: H					Nominal filtration Filter Element ΔP Series: N		
Type	Length	A03	A06	A10	A16	A25	P10	P25	M25 - M60 - M90
									M25
MR 250	2	3.61	4.08	1.81	1.71	1.35	-	-	0.55
	4	2.10	1.70	1.14	0.77	0.53	-	-	0.60
MR 100	1	19.00	17.00	6.90	6.30	4.60	2.94	2.52	1.60
	2	11.70	10.80	4.40	4.30	3.00	2.94	2.52	1.37
	3	7.80	6.87	3.70	3.10	2.70	2.14	1.84	1.34
	4	5.50	4.97	2.60	2.40	2.18	1.72	1.47	1.34
	5	4.20	3.84	2.36	2.15	1.90	1.60	1.37	1.34
MR 250	1	5.35	4.85	2.32	1.92	1.50	1.38	1.20	0.15
	2	4.00	3.28	1.44	1.10	1.07	0.96	0.83	0.13
	3	2.60	2.20	1.08	1.00	0.86	0.77	0.64	0.12
	4	1.84	1.56	0.68	0.56	0.44	0.37	0.23	0.11
MR 630	1	3.10	2.48	1.32	1.14	0.92	0.83	0.73	0.09
	2	2.06	1.92	0.82	0.76	0.38	0.33	0.27	0.08
	3	1.48	1.30	0.60	0.56	0.26	0.22	0.17	0.08
	4	1.30	1.20	0.48	0.40	0.25	0.21	0.16	0.08
	5	0.74	0.65	0.30	0.28	0.13	0.10	0.08	0.04
MR 850	1	0.60	0.43	0.34	0.25	0.13	0.12	0.09	0.03
	2	0.37	0.26	0.23	0.21	0.11	0.08	0.07	0.03
	3	0.27	0.18	0.17	0.17	0.05	0.04	0.04	0.02
	4	0.23	0.16	0.13	0.12	0.04	0.03	0.03	0.02

RETURN / SUCTION FILTERS

Filter element		Absolute filtration		
Type	Length	A10	A16	A25
RSX 116	1	5.12	4.33	3.85
	2	2.22	1.87	1.22
RSX 165 RSX 166	1	2.06	1.75	1.46
	2	1.24	1.05	0.96
	3	0.94	0.86	0.61

Filter element		Absolute filtration Filter Element ΔP Series: N							
Type	Length	A03	A06	A10	A16	A25	P10	P25	M25 - M60 - M90
CU 110	1	16.25	15.16	8.75	8.14	5.87	2.86	2.65	0.14
	2	12.62	10.44	6.11	6.02	4.16	1.60	1.49	0.12
	3	8.57	7.95	5.07	4.07	2.40	1.24	1.15	0.11
	4	5.76	4.05	4.05	2.36	1.14	0.91	0.85	0.05

Corrective factor Y to be used for the filter element pressure drop calculation. The values depend to the filter size and length and to the filter media.
Reference oil viscosity 30 mm^2/s

LOW & MEDIUM PRESSURE FILTERS

Filter element		Absolute filtration Filter Element ΔP Series: N - W					Nominal filtration Filter Element ΔP Series: N		
Type	Length	A03	A06	A10	A16	A25	P10	P25	M25
CU 110	1	16.25	15.16	8.75	8.14	5.87	2.86	2.65	0.14
	2	12.62	10.44	6.11	6.02	4.15	1.60	1.49	0.12
	3	8.57	7.95	5.07	4.07	2.40	1.24	1.15	0.11
	4	5.76	4.05	2.80	2.36	1.14	0.91	0.85	0.05
CU 210	1	5.30	4.80	2.00	1.66	1.32	0.56	0.43	0.12
	2	3.44	2.95	1.24	1.09	0.70	0.42	0.35	0.09
	3	2.40	1.70	0.94	0.84	0.54	0.33	0.23	0.05
DN	016	7.95	7.20	3.00	2.49	1.98	0.84	0.65	0.18
	025	5.00	4.53	1.89	1.57	1.25	0.53	0.41	0.11
	040	3.13	2.66	1.12	0.98	0.63	0.38	0.32	0.08
CU 400	2	3.14	2.55	1.46	1.22	0.78	0.75	0.64	0.19
	3	2.15	1.70	0.94	0.78	0.50	0.40	0.34	0.10
	4	1.60	1.28	0.71	0.61	0.40	0.34	0.27	0.08
	5	1.00	0.83	0.47	0.34	0.20	0.24	0.19	0.06
	6	0.82	0.58	0.30	0.27	0.17	0.22	0.18	0.105
CU 900	1	0.86	0.63	0.32	0.30	0.21	-	-	0.05
CU 950	2	1.03	0.80	0.59	0.40	0.26	-	-	0.05
	3	0.44	0.40	0.27	0.18	0.15	-	-	0.02
MR 630	7	0.88	0.78	0.36	0.34	0.16	0.12	0.96	0.47

HIGH PRESSURE FILTERS

Filter element		Absolute filtration Filter Element ΔP Series: N - R					Nominal filtration Filter El. ΔP Series: N
Type	Length	A03	A06	A10	A16	A25	M25
HP 010 HP 011	1	332.71	250.07	184.32	152.36	128.36	-
	2	220.28	165.56	74.08	59.13	37.05	-
	3	123.24	92.68	41.48	33.08	20.72	-
	4	77.76	58.52	28.37	22.67	16.17	-
HP 039	2	70.66	53.20	25.77	20.57	14.67	4.90
	3	36.57	32.28	18.00	13.38	8.00	2.90
	4	26.57	23.27	12.46	8.80	5.58	2.20
HP 050 HPX 050	1	31.75	30.30	13.16	12.3	7.29	1.60
	2	24.25	21.26	11.70	9.09	4.90	1.40
	3	17.37	16.25	8.90	7.18	3.63	1.25
	4	12.12	10.75	6.10	5.75	3.08	1.07
	5	7.00	6.56	3.60	3.10	2.25	0.80
HP 065	1	58.50	43.46	23.16	19.66	10.71	1.28
	2	42.60	25.64	16.22	13.88	7.32	1.11
	3	20.50	15.88	8.18	6.81	3.91	0.58
HP 135	1	20.33	18.80	9.71	8.66	4.78	2.78
	2	11.14	10.16	6.60	6.38	2.22	1.11
	3	6.48	6.33	3.38	3.16	2.14	1.01
HP 150 HPX 150	1	17.53	15.91	7.48	6.96	5.94	1.07
	2	8.60	8.37	3.54	3.38	3.15	0.58
	3	6.53	5.90	2.93	2.79	2.12	0.49

TO BE CONTINUED >>

Corrective factor Y to be used for the filter element pressure drop calculation. The values depend to the filter size and length and to the filter media.
Reference oil viscosity 30 mm^2/s

HIGH PRESSURE FILTERS

Filter element		Absolute filtration Filter Element ΔP Series: N - R					Nominal filtration Filter El. ΔP Series: N
Type	Length	A03	A06	A10	A16	A25	M25
HP 320	1	10.88	9.73	5.02	3.73	2.54	1.04
	2	4.40	3.83	1.75	1.48	0.88	0.71
	3	2.75	2.11	1.05	0.87	0.77	0.61
	4	2.12	1.77	0.98	0.78	0.55	0.47
HP 500	1	4.44	3.67	2.30	2.10	1.65	0.15
	2	3.37	2.77	1.78	1.68	1.24	0.10
	3	2.22	1.98	1.11	1.09	0.75	0.08
	4	1.81	1.33	0.93	0.86	0.68	0.05
	5	1.33	1.15	0.77	0.68	0.48	0.04
HP 325	1	3.65	2.95	2.80	1.80	0.90	0.38
	2	2.03	1.73	1.61	1.35	0.85	0.36
	3	1.84	1.42	1.32	1.22	0.80	0.35

Filter element		Absolute filtration Filter Element ΔP Series: S - H - U				
Type	Length	A03	A06	A10	A16	A25
HP 010 HP 011	1	424.58	319.74	235.17	194.44	163.78
	2	281.06	211.25	94.35	75.45	47.26
	3	130.14	97.50	43.63	34.82	21.81
	4	109.39	82.25	36.79	29.37	18.40
HP 039	2	73.00	57.00	28.00	24.00	17.20
	3	40.90	36.33	21.88	18.80	11.20
	4	31.50	28.22	17.22	9.30	6.70
HP 050 HPX 050	1	47.33	34.25	21.50	20.50	14.71
	2	29.10	25.95	10.04	10.90	5.88
	3	20.85	19.50	10.68	8.61	4.36
	4	14.55	12.90	7.32	6.90	3.69
	5	9.86	9.34	6.40	4.80	2.50
HP 135	1	29.16	25.33	13.00	12.47	5.92
	2	14.28	11.04	7.86	7.90	4.44
	3	8.96	7.46	4.89	4.16	3.07
HP 320	1	13.00	12.19	6.80	6.40	3.32
	2	6.45	5.31	3.01	2.89	1.73
	3	4.13	3.14	1.90	1.78	1.17
	4	3.17	2.71	1.80	1.70	1.10
HP 500	1	9.70	8.81	4.55	4.47	2.80
	2	5.46	4.63	2.88	2.68	2.20
	3	3.90	3.74	2.22	2.07	1.53
	4	3.10	2.84	1.56	1.53	1.02
	5	1.93	1.83	1.14	1.08	0.69

Corrective factor Y to be used for the filter element pressure drop calculation. The values depend to the filter size and length and to the filter media.
Reference oil viscosity 30 mm^2/s

STAINLESS STEEL HIGH PRESSURE FILTERS

Filter element		Absolute filtration Filter Element ΔP Series: N - R					Nominal filtration Filter El. ΔP Series: N
Type	Length	A03	A06	A10	A16	A25	M25
HP 010 HP 011	1	332.71	250.07	184.32	152.36	128.36	-
	2	220.28	165.56	74.08	59.13	37.05	-
	3	123.24	92.68	41.48	33.08	20.72	-
	4	77.76	58.52	28.37	22.67	16.17	-
HP 039	2	70.66	53.20	25.77	20.57	14.67	4.90
	3	36.57	32.28	18.00	13.38	8.00	2.90
	4	26.57	23.27	12.46	8.80	5.58	2.20
HP 050	1	31.75	30.30	13.16	12.3	7.29	1.60
	2	24.25	21.26	11.70	9.09	4.90	1.40
	3	17.37	16.25	8.90	7.18	3.63	1.25
	4	12.12	10.75	6.10	5.75	3.08	1.07
	5	7.00	6.56	3.60	3.10	2.25	0.80
HP 135	1	20.33	18.80	9.71	8.66	4.78	2.78
	2	11.14	10.16	6.60	6.38	2.22	1.11
	3	6.48	6.33	3.38	3.16	2.14	1.01

Filter element		Absolute filtration Filter Element ΔP Series: S - H - U				
Type	Length	A03	A06	A10	A16	A25
HP 010 HP 011	1	424.58	319.74	235.17	194.44	163.78
	2	281.06	211.25	94.35	75.45	47.26
	3	130.14	97.50	43.63	34.82	21.81
	4	109.39	82.25	36.79	29.37	18.40
HP 039	2	73.00	57.00	28.00	24.00	17.20
	3	40.90	36.33	21.88	18.80	11.20
	4	31.50	28.22	17.22	9.30	6.70
HP 050	1	47.33	34.25	21.50	20.50	14.71
	2	29.10	25.95	10.04	10.90	5.88
	3	20.85	19.50	10.68	8.61	4.36
	4	14.55	12.90	7.32	6.90	3.69
	5	9.86	9.34	6.40	4.80	2.50
HP 135	1	29.16	25.33	13.00	12.47	5.92
	2	14.28	11.04	7.86	7.90	4.44
	3	8.96	7.46	4.89	4.16	3.07

Corrective factor Y to be used for the filter element pressure drop calculation. The values depend to the filter size and length and to the filter media.
Reference oil viscosity 30 mm^2/s

FILTERS FOR POTENTIALLY EXPLOSIVE ATMOSPHERE

Filter element		Absolute filtration Filter Element ΔP Series: N - R					Nominal filtration Filter El. ΔP Series: N
Type	Length	A03	A06	A10	A16	A25	M25
HP 010 HP 011	1	332.71	250.07	184.32	152.36	128.36	-
	2	220.28	165.56	74.08	59.13	37.05	-
	3	123.24	92.68	41.48	33.08	20.72	-
	4	77.76	58.52	28.37	22.67	16.17	-
HP 039	2	70.66	53.20	25.77	20.57	14.67	4.90
	3	36.57	32.28	18.00	13.38	8.00	2.90
	4	26.57	23.27	12.46	8.80	5.58	2.20
HPX 050	1	31.75	30.30	13.16	12.3	7.29	1.60
	2	24.25	21.26	11.70	9.09	4.90	1.40
	3	17.37	16.25	8.90	7.18	3.63	1.25
	4	12.12	10.75	6.10	5.75	3.08	1.07
	5	7.00	6.56	3.60	3.10	2.25	0.80
HP 135	1	20.33	18.80	9.71	8.66	4.78	2.78
	2	11.14	10.16	6.60	6.38	2.22	1.11
	3	6.48	6.33	3.38	3.16	2.14	1.01
HP 150	1	17.53	15.91	7.48	6.96	5.94	1.07
	2	8.60	8.37	3.54	3.38	3.15	0.58
	3	6.53	5.90	2.93	2.79	2.12	0.49

Filter element		Absolute filtration Filter Element ΔP Series: S - H - U				
Type	Length	A03	A06	A10	A16	A25
HP 010 HP 011	1	424.58	319.74	235.17	194.44	163.78
	2	281.06	211.25	94.35	75.45	47.26
	3	130.14	97.50	43.63	34.82	21.81
	4	109.39	82.25	36.79	29.37	18.40
HP 039	2	73.00	57.00	28.00	24.00	17.20
	3	40.90	36.33	21.88	18.80	11.20
	4	31.50	28.22	17.22	9.30	6.70
HPX 050	1	47.33	34.25	21.50	20.50	14.71
	2	29.10	25.95	10.04	10.90	5.88
	3	20.85	19.50	10.68	8.61	4.36
	4	14.55	12.90	7.32	6.90	3.69
	5	9.86	9.34	6.40	4.80	2.50
HP 135	1	29.16	25.33	13.00	12.47	5.92
	2	14.28	11.04	7.86	7.90	4.44
	3	8.96	7.46	4.89	4.16	3.07

Corrective factor Y to be used for the filter element pressure drop calculation. The values depend to the filter size and length and to the filter media.

Filters sizing software

The web-based software program will allow you to select the most suitable MP Filtri's Filters, in accordance with your process design requirements.

The program will automatically check your input design process prior to propose you the acceptable solutions and create an output in PDF report style format.

The MP Filtri Selection Tool software program is easy to use with a flexible fast design method and provides improved layout formats with full descriptions.

The web-based tool is available at MP Filtri website at following link: https://www.mpfiltri.com/tools/

The related, complete user guide is available as Manual and downloadable from the "Download" section of MP Filtri website, as well as scanning the following QR code

Scan or click me!

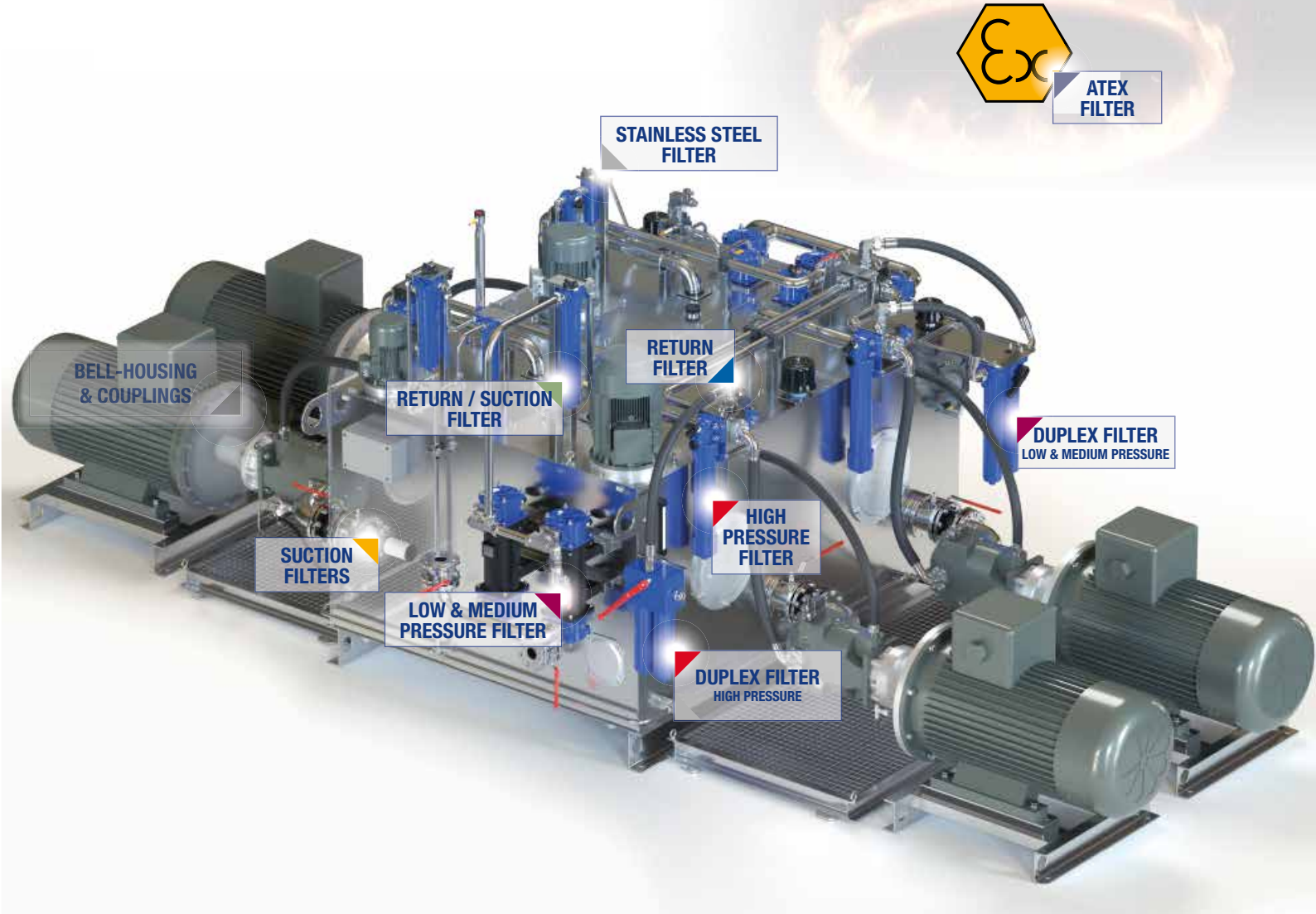

Hydraulic combined filters for installation on the return and suction lines of hydrostatic transmissions (HSTs) for commercial vehicles, construction machinery, agricultural vehicles, and mobile work equipment with hydrostatic drive.

Advantage for the installation:
- **Space-saving assembly**
- **Reduced assembly time**
- **Fewer connections to the tank**
- **Protection from the pollution of the tank**

Advantages for the operativity:
- **Absolute filtration of the oil for the hydrostatic drive**
- **Fulfilment of the purity requirements according to ISO 4406, as specified by the manufacturer of the driving drives.**
- **Protection against damages from cavitation even under adverse conditions, i.e. cold start**
- **Less formation of free air in the system**
- **Easier maintenance operations (one spare filter element instead of two)**

FILTER SIZING

For the proper calculation see pag. 22

Return / Suction filters

MRSX	page 273
LMP 124 MULTIPORT	287
INDICATORS	722-723

MYCLEAN

THE X CONCEPT FOR OUR FILTERS

**Protect the performance of your system with MYclean.
Quality and efficiency are fundamental for MP Filtri:
this exclusive new filter element possesses polygon shape geometry and specific seal that ensures only original spare parts can be used - ensuring correct operation and higher system reliability.**

MRSX series

with MYCLEAN RSX Filter Element

- **Protects the machine from improper use of non-original products.**
- **Safety of constant quality protection & reliability**

With exclusive filter element you are sure that only MP Filtri filter elements can be used, ensuring the best cleaning level of the oil due to the use of originals filter elements.

The products identified as MRSX are protected by:

- Italian Patent n° 102014902261205
- Canadian Patent n° 2,937,258
- European Patent n° 3 124 092 B1
- US Patent n° 20170030384 A1

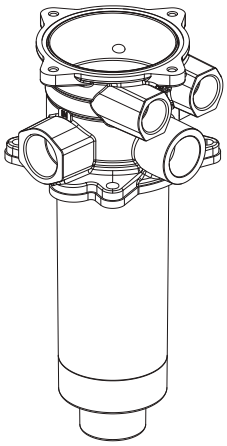

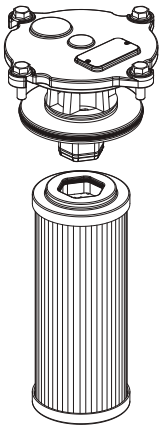

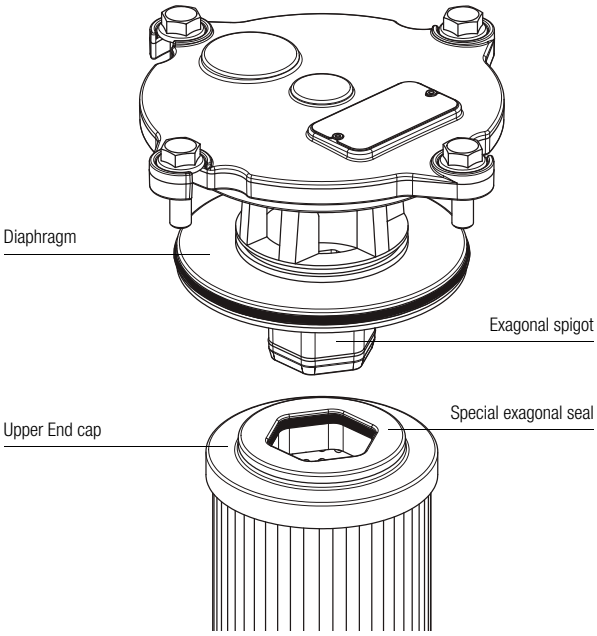

MRSX series

Maximum working pressure up to 1 MPa (10 bar) - Flow rate up to 250 l/min

MRSX GENERAL INFORMATION

Description

Return / Suction filter	Tank mounted

Maximum working pressure up to 1 MPa (10 bar)
Flow rate up to 250 l/min

MRSX is a range of suction/return filters for hydraulic systems with two or more circuits (both open and closed loops). They are able to provide pressurized oil cleaned by fine filtration to the feed pump of the hydrostatic systems.
They are directly fixed to the reservoir, in immersed or semi-immersed position.
The filter output must be always immersed into the fluid to avoid aeration or foam generation into the reservoir.

Available features:
- Female threaded return connections up to 1 1/4", for a maximum return flow rate of 250 l/min
- Multiple connections, to connect several return and suction lines
- Fine filtration rating, to get a good cleanliness level into the reservoir
- Bypass valve to the tank, to relieve excessive pressure drop across the filter media when the return flow is enough higher than the suction flow
- Bypass valve to the suction line with additional suction filter element, to relieve excessive pressure drop across the filter media when the return flow is not enough higher than the suction flow
- De-pressurization valve, to reduce the pressure inside the filter during the maintenance operations
- Anti-cavitation valve with additional suction filter element, to ensure fluid to the feed pump of the hydrostatic systems during cold starts or initial filling
- O-ring or Flat Seal to suit a variety of reservoir surfaces
- Reservoir side mounting, to save space in the machines
- Visual, electrical and electronic clogging indicators
- MYclean interface connection, to protect the product against non-original spare parts
- External protective wrap, to optimize the flow through the element and to save the element efficiency against non-proper handling

Common applications:
Mobile machines with hydrostatic systems on board
(i.e. skid steer loaders, telehandlers, dumpers, road sweepers)

Technical data

Filter housing materials
- Head: Aluminium

- Cover
  Polyamide: MRSX 116
  Aluminium: MRSX 165-166

- Bowl: Polyamide

Δp element type
- RSX: 10 bar
- Oil flow from exterior to interior.

Seals
- Standard NBR series A
- Optional FPM series V

Temperature
From -25 °C to +110 °C

Flow rates [l/min]

Filter series	Length	A10	A16	A25
MRSX 116	1	74	82	87
	2	108	113	124
MRSX 165 - 166	1	155	166	178
	2	187	196	200
	3	201	205	217

Maximum flow rate for a complete return/suction filter with a pressure drop Δp = 1 bar.
The reference fluid has a kinematic viscosity of 30 mm^2/s (cSt) and a density of 0.86 kg/dm^3.
For different pressure drop or fluid viscosity we recommend to use our selection software available on www.mpfiltri.com.
You can also calculate the right size using the formulas present on the FILTER SIZING paragraph at the beginning of the full catalogue or at the beginning of the filter family brochure.
Please, contact our Sales Department for further additional information.

Hydraulic symbols

Valves A option	Valves B option	Valves C option	Valves D option	Valves E option	Filter series
					MRSX 116

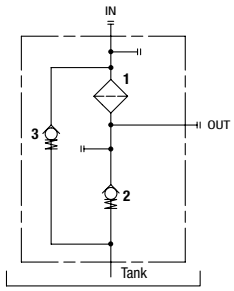

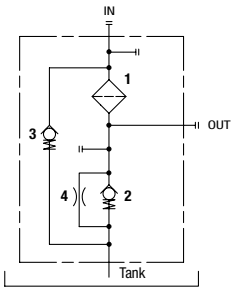

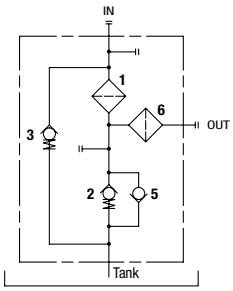

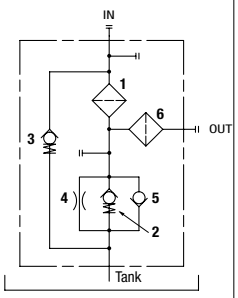

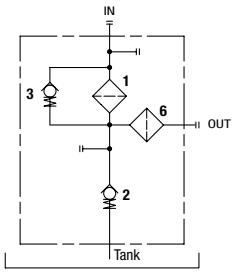

Valves F option	Valves G option	Valves H option	Valves I option	Valves M option
			Suitable only for tank side-wall mounting	

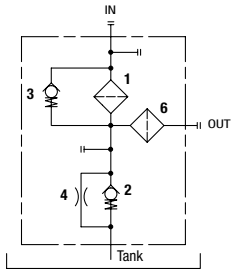

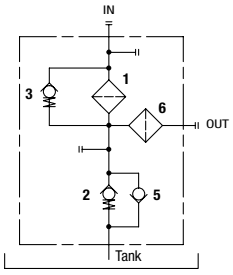

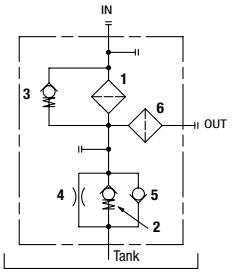

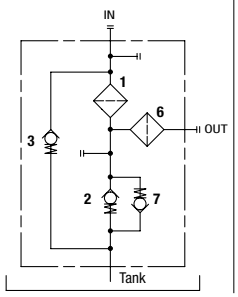

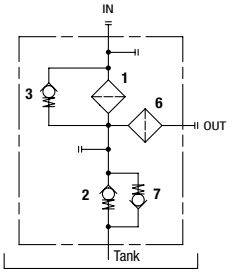

Valves A option	Valves B option	Valves C option	Valves D option	Valves E option	Filter series
					MRSX 165-166

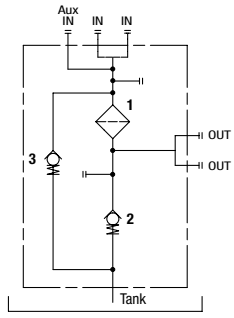

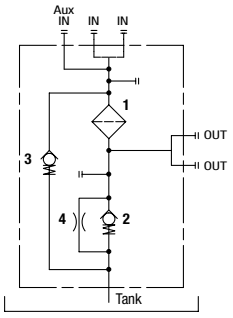

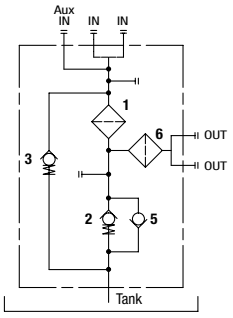

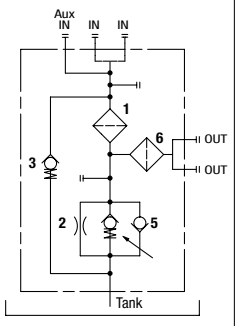

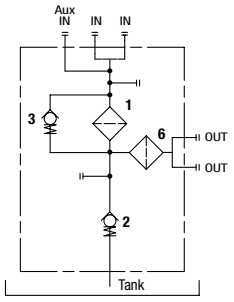

Valves F option	Valves G option	Valves H option	Valves I option	Valves M option
			Suitable only for tank side-wall mounting	

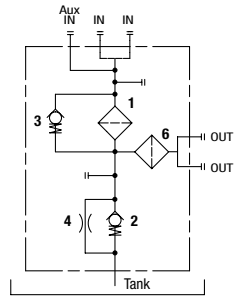

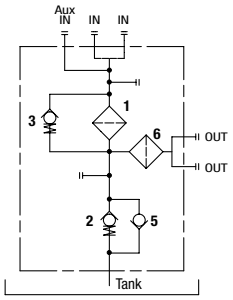

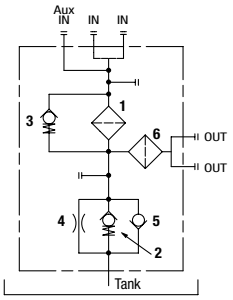

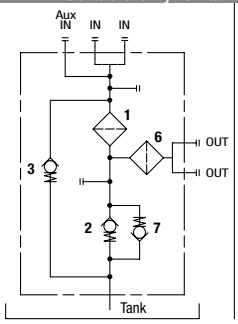

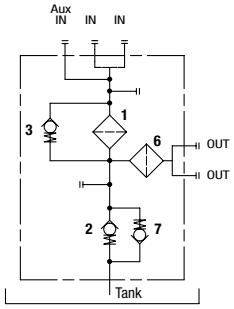

LEGEND

1 - Filter element
2 - Back-Pressure valve: opening pressure 0.5 bar ±10%
3 - Bypass valve: opening pressure 2.5 bar ±10%
4 - Depressurization valve
5 - Anti-Cavitation valve
6 - Safety filter element (wire mesh 60 µm)
7 - Anti-Cavitation valve / Anti-Emptying valve

Pressure drop

Filter housings Δp pressure drop

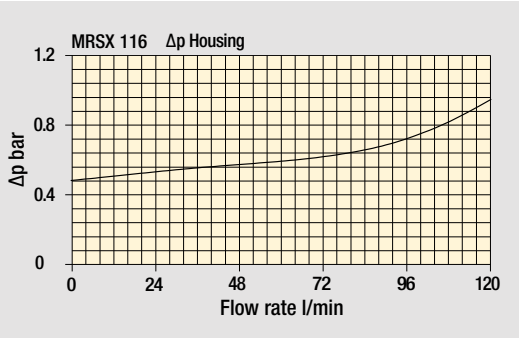

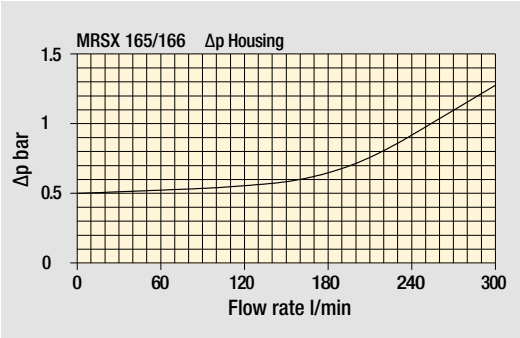

Bypass valve pressure drop

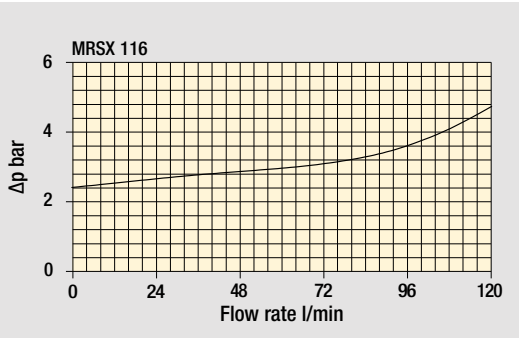

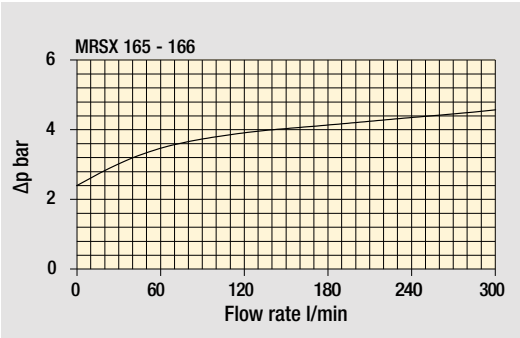

The curves are plotted using mineral oil with density of 0.86 kg/dm^3 in compliance with ISO 3968. Δp varies proportionally with density.

Weights [kg] and volumes [dm^3]

Filter series	Weights [kg]				Volumes [dm^3]			
	Length	1	2	3	Length	1	2	3
MRSX 116		1.30	1.40	-		0.80	1.00	-
MRSX 165		3.40	3.80	4.10		2.00	2.60	3.00
MRSX 166		3.40	3.80	4.10		2.00	2.60	3.00

MRSX MRSX116

Designation & Ordering code

COMPLETE FILTER

Configuration example: MRSX116 | 1 | B | A | G1 | 0 | A16 | B | P01

Series and size

MRSX116 Filter featuring MY CLEAN Filter Element

Length

1 | **2**

Hydraulic diagram configuration - see page 275

	Bypass valve to tank	Bypass valve to OUT
A | **B** | **C** | **D**	•	-
E | **F** | **G** | **H**	-	•
I	•	-
M	-	•

Seals and treatments

A	NBR, O-Ring on head	**B**	NBR, flat seal on head
V	FPM, O-Ring on head	**D**	FPM, flat seal on head

Connections IN		Connections OUT
G1	G 3/4”	G 3/4”
G2	G 1”	G 1”
G3	3/4” NPT	3/4” NPT
G4	1” NPT	1” NPT
G5	SAE 12 - 1 1/16” - 12 UN	SAE 12 - 1 1/16” - 12 UN
G6	SAE 16 - 1 5/16” - 12 UN	SAE 16 - 1 5/16” - 12 UN
D1	G 1”	G 3/4”
D2	1” NPT	3/4” NPT
D3	SAE 16 - 1 5/16” - 12 UN	SAE 12 - 1 1/16” - 12 UN

Aux IN connection

0 Without aux IN connection

Filtration rating (filter media)

A10 Inorganic microfiber 10 µm
A16 Inorganic microfiber 16 µm
A25 Inorganic microfiber 25 µm

Valves configuration

Mounting position		A	B	C	D	E	F	G	H	I	M
S	Standard	•	•	•	•	•	•	•	•	-	-
B	Tank side-wall mounting	•	•	-	-	•	•	-	-	•	•

Execution

P01 MP Filtri standard
Pxx Customized

FILTER ELEMENT

Configuration example: RSX116 | 1 | A16 | A | P01

Element series and size

RSX116 Filter Element with MY CLEAN feature

Element length

1 | **2**

Filtration rating (filter media)

A10 Inorganic microfiber 10 µm
A16 Inorganic microfiber 16 µm
A25 Inorganic microfiber 25 µm

Seals

A NBR
V FPM

Execution

P01 MP Filtri standard
Pxx Customized

CLOGGING INDICATORS

See page 722-723

Indicators on Return Line

BVA Axial pressure gauge
BVR Radial pressure gauge
BVP Visual pressure indicator with automatic reset
BVQ Visual pressure indicator with manual reset
BEA Electrical pressure indicator
BEM Electrical pressure indicator
BET Electrical pressure indicator
BLA Electrical / visual pressure indicator

Indicators on Suction Line

VVB Axial vacuum gauge
VVS Radial vacuum gauge
VEB Electrical vacuum indicator
VLB Electrical / visual vacuum indicator

MRSX116		
Filter length	**H1 [mm]**	**H2 [mm]**
1	203	240
2	263	300

Connections	T
G1 - G2	G 1/8”
G3 - G4	1/8” NPT
G5 - G6	1/8” NPT
D1	G 1/8”
D2 - D3	1/8” NPT

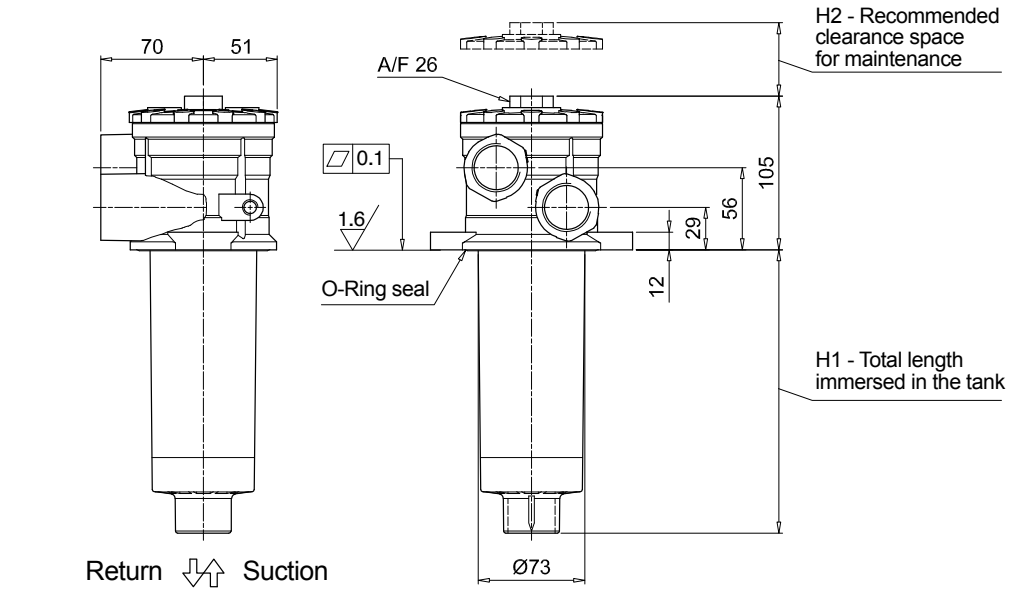

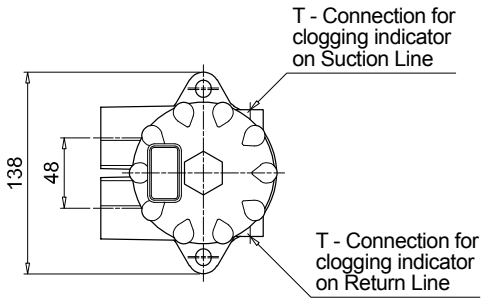

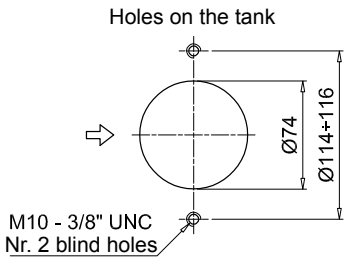

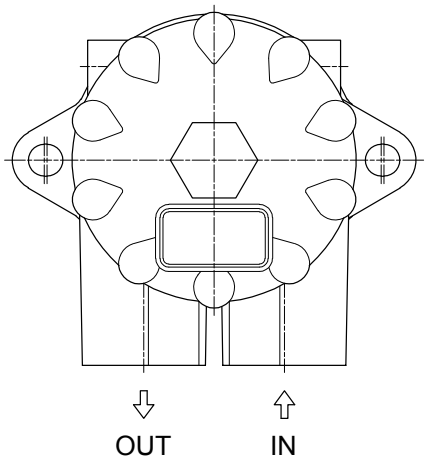

MRSX MRSX165 - MRSX166

Designation & Ordering code

COMPLETE FILTER

Configuration example: MRSX166 | 2 | C | V | G3 | 1 | A10 | S | P01

Series and size

MRSX165 | **MRSX166** Filter featuring MYCLEAN Filter Element

Length

1 | **2** | **3**

Hydraulic diagram configuration - see page 275

	Bypass valve to tank	Bypass valve to OUT
A | **B** | **C** | **D**	•	-
E | **F** | **G** | **H**	-	•
I	•	-
M	-	•

Seals and treatments

A	NBR, O-Ring on head	**B**	NBR, flat seal on head
V	FPM, O-Ring on head	**D**	FPM, flat seal on head

Connections

	IN (size 165)	IN (size 166)	Aux IN	OUT
G1	G 1 1/4"	G 1"	G 1 1/4"	G 1"
G2	1 1/4" NPT	1" NPT	1 1/4" NPT	1" NPT
G3	SAE 20 - 1 5/8" - 12 UN	SAE 16 - 1 5/16" - 12 UN	SAE 20 - 1 5/8" - 12 UN	SAE 16 - 1 5/16" - 12 UN

Aux IN connection

		MRSX 165	MRSX 166
0	Without aux IN connection	•	-
1	With aux IN connection - see previous table	•	•

Filtration rating (filter media)

A10 Inorganic microfiber 10 µm
A16 Inorganic microfiber 16 µm
A25 Inorganic microfiber 25 µm

Valves configuration

Mounting position	A	B	C	D	E	F	G	H	I	M
S Standard	•	•	•	•	•	•	•	•	-	-
B Tank side-wall mounting	•	•	-	-	•	•	-	-	•	•

Execution

P01 MP Filtri standard
Pxx Customized

FILTER ELEMENT

Configuration example: RSX165 | 2 | A10 | V | P01

Element series and size

RSX165 Filter Element with MYCLEAN feature

Element length

1 | **2** | **3**

Filtration rating (filter media)

A10 Inorganic microfiber 10 µm
A16 Inorganic microfiber 16 µm
A25 Inorganic microfiber 25 µm

Seals

A NBR
V FPM

Execution

P01 MP Filtri standard
Pxx Customized

CLOGGING INDICATORS

See page 722-723

Indicators on Return Line

BVA Axial pressure gauge
BVR Radial pressure gauge
BVP Visual pressure indicator with automatic reset
BVQ Visual pressure indicator with manual reset
BEA Electrical pressure indicator
BEM Electrical pressure indicator
BET Electrical pressure indicator
BLA Electrical / visual pressure indicator

Indicators on Suction Line

VVB Axial vacuum gauge
VVS Radial vacuum gauge
VEB Electrical vacuum indicator
VLB Electrical / visual vacuum indicator

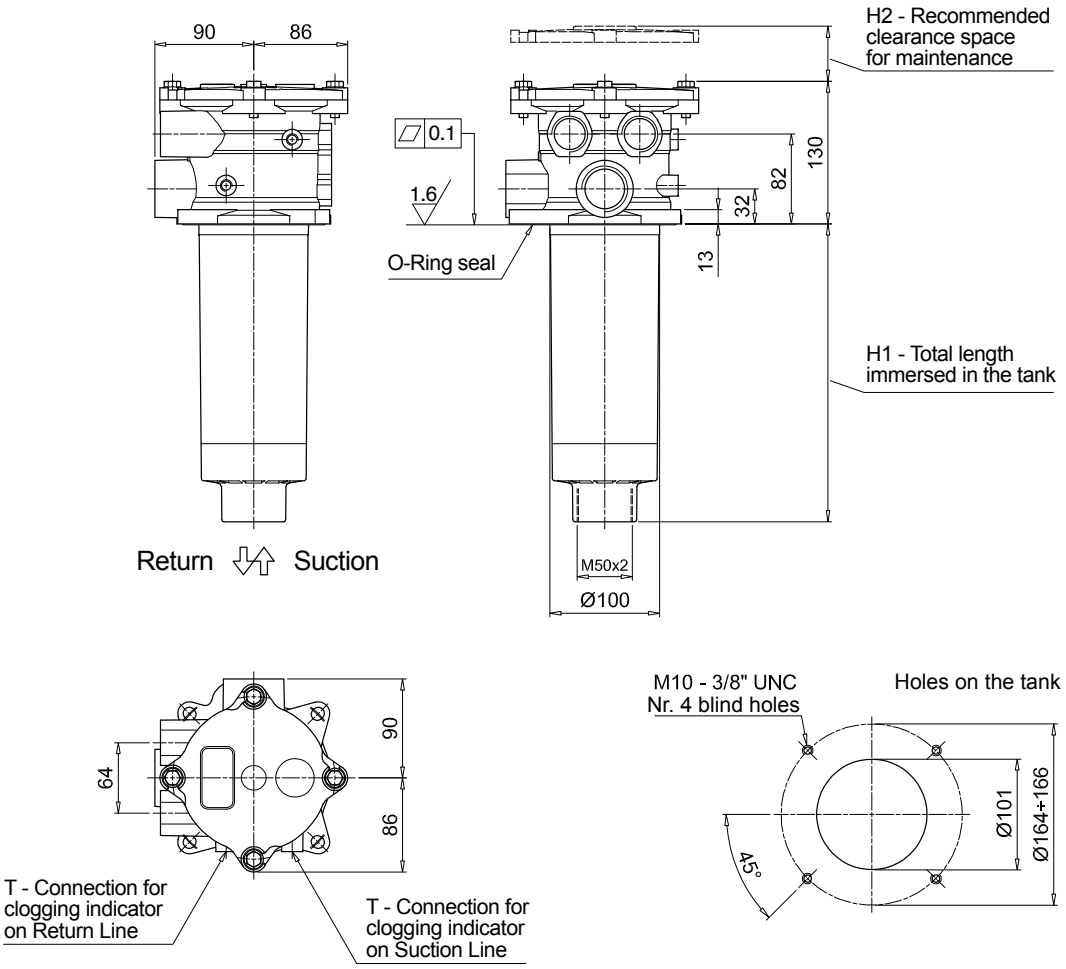

MRSX165		
Filter length	**H1 [mm]**	**H2 [mm]**
1	270	320
2	378	430
3	445	500

Connections	**T**
G1	G 1/8"
G2 - G3	1/8" NPT

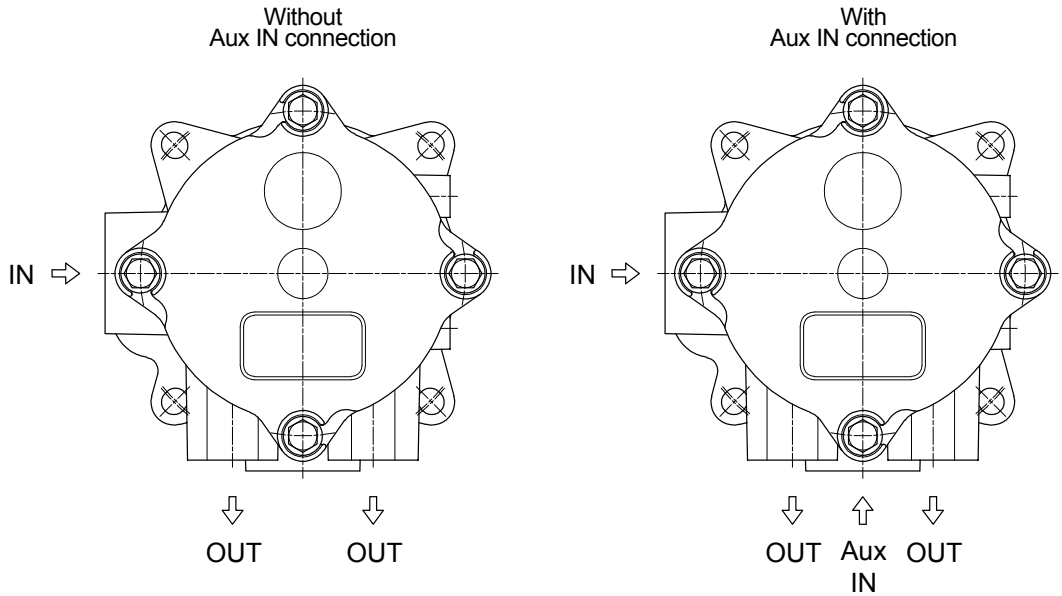

Dimensions

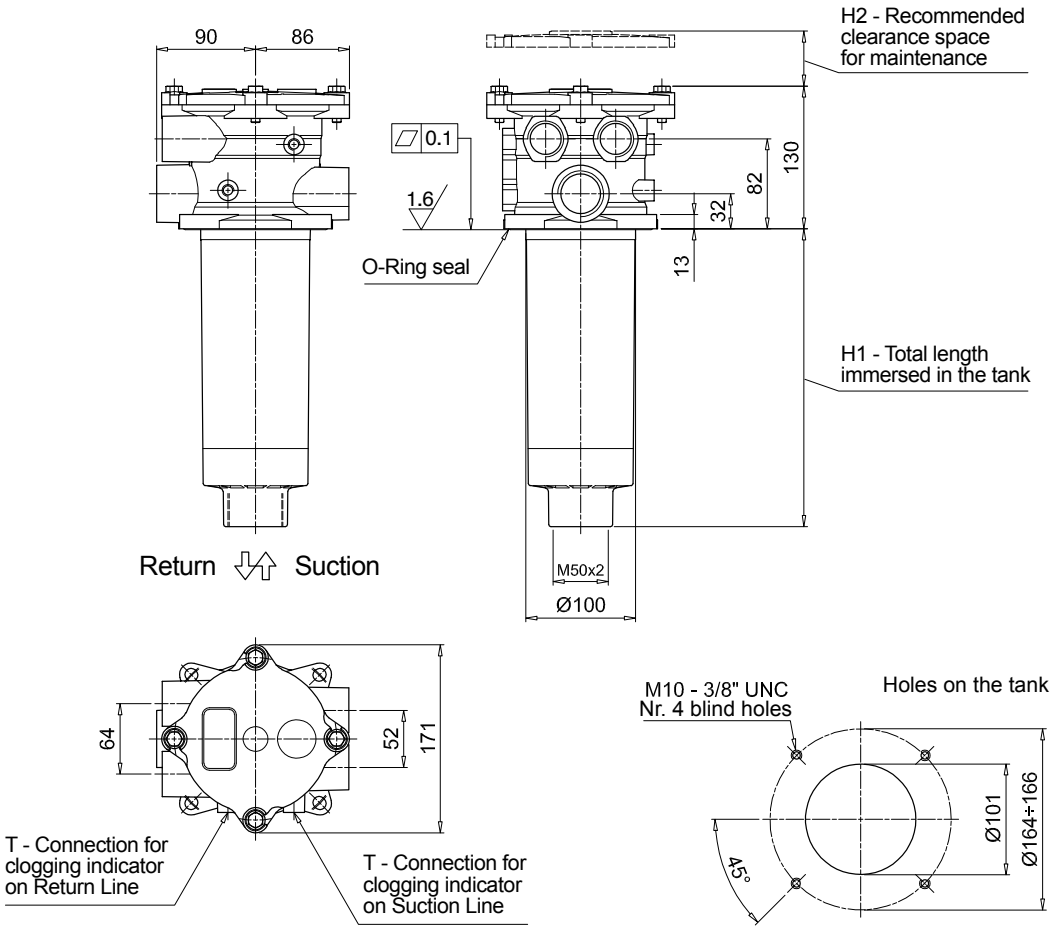

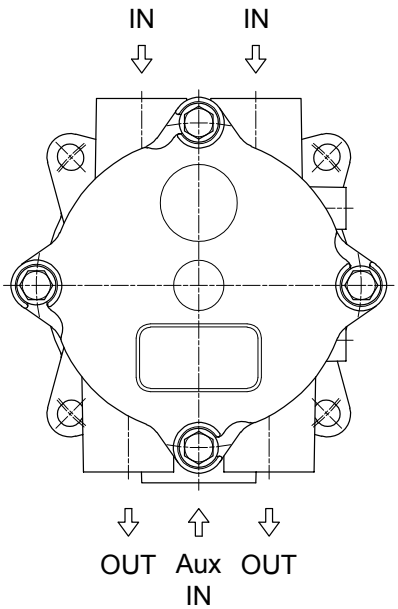

MRSX166

Filter length	H1 [mm]	H2 [mm]
1	270	320
2	378	430
3	445	500

Connections	T
G1	G 1/8"
G2 - G3	1/8" NPT

Order number for spare parts

MRSX 116

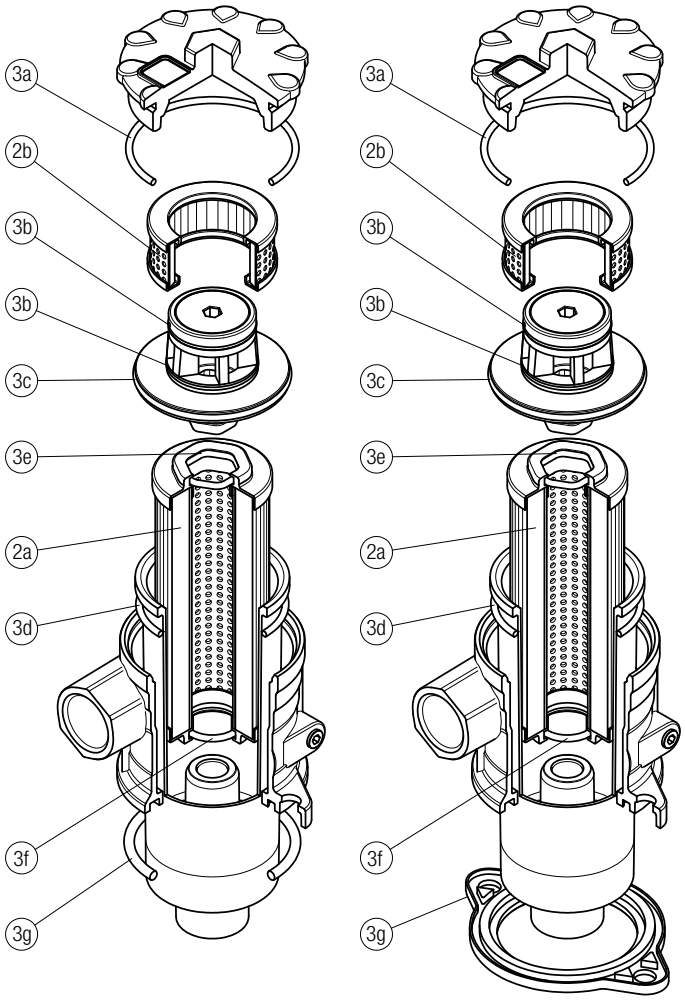

Item:	Q.ty: 1 pc. 2a	Q.ty: 1 pc. 2b	O-RING SEAL Q.ty: 1 pc. 3 (3a ÷ 3g)		FLAT SEAL Q.ty: 1 pc. 3 (3a ÷ 3g)	
Filter series	**Filter element**	**Safety filter element**	**Seal Kit code number NBR**	**FPM**	**Seal Kit code number NBR**	**FPM**
MRSX 116	See order table	S116M60P01	02050617	02050619	02050618	02050620

MRSX 165 - 166

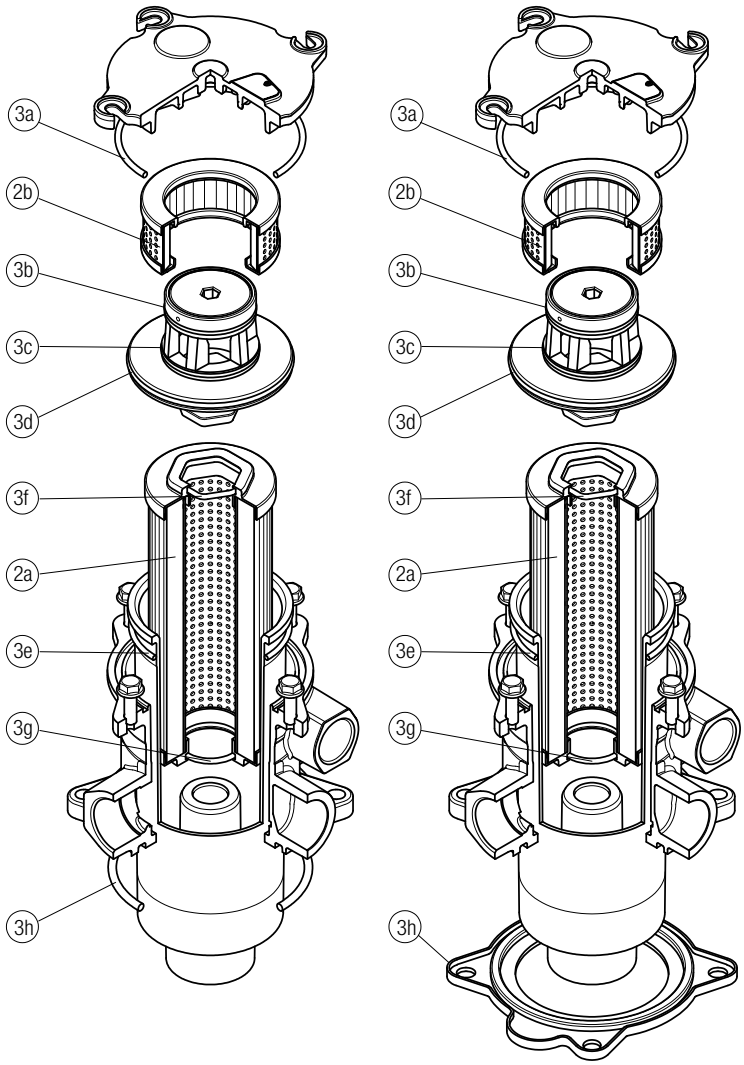

Item:	Q.ty: 1 pc. 2a	Q.ty: 1 pc. 2b	O-RING SEAL Q.ty: 1 pc. 3 (3a ÷ 3h)		FLAT SEAL Q.ty: 1 pc. 3 (3a ÷ 3h)	
Filter series	**Filter element**	**Safety filter element**	**Seal Kit code number NBR**	**FPM**	**Seal Kit code number NBR**	**FPM**
MRSX 165	See order table	S165M60P01	02050627	02050630	02050628	02050631
MRSX 166			02050627	02050630	02050629	02050632

LMP 124 series
MULTIPORT

Maximum working pressure up to 8 MPa (80 bar) - Flow rate up to 120 l/min

LMP 124 GENERAL INFORMATION
MULTIPORT

Description

Return / Suction filter	In-line

Maximum working pressure up to 8 MPa (80 bar)
Flow rate up to 120 l/min

LMP124 is a range of return/suction filters for hydraulic systems with two or more circuits (both open and closed loops). They are able to provide pressurized oil cleaned by fine filtration to the feed pump of the hydrostatic systems.
They are directly connected to the lines of the system through the hydraulic fittings.

Available features:
- Female threaded connections up to 1", for a maximum return flow rate of 120 l/min
- Fine filtration rating, to get a good cleanliness level into the reservoir
- Bypass valve to the tank, to relieve excessive pressure drop across the filter media when the return flow is enough higher than the suction flow
- Bypass valve to the suction line with additional suction filter element, to relieve excessive pressure drop across the filter media when the return flow is not enough higher than the suction flow
- De-pressurization valve, to reduce the pressure inside the filter during the maintenance operations
- Visual, electrical and electronic differential clogging indicators

Common applications:
Mobile machines with hydrostatic systems on board.
(i.e. skid steer loaders, telehandlers, dumpers, road sweepers)

Technical data

Filter housing materials
- Head: Aluminium
- Housing: Cataphoresis - Painted steel
- Bypass valve: Brass - Aluminium

Pressure
- Test pressure: 12MPa (120 bar)
- Burst pressure: 38 MPa (380 bar)
- Pulse pressure fatigue test: 1 000 000 cycles with pressure from 0 to 80 bar (8 MPa)

Bypass valve
- Opening pressure 250 kPa (2.5 bar) ±10%
- Other opening pressures on request.

Δp element type
- Microfibre filter elements - series N - W: 20 bar
- Fluid flow through the filter element from OUT to IN.

Seals
- Standard NBR series A
- Optional FPM series V

Temperature
From -25 °C to +110 °C

Note
LMP124 filters are provided for vertical mounting

Weights [kg] and volumes [dm³]

Filter series	Weights [kg]					Volumes [dm³]				
	Length	1	2	3	4	Length	1	2	3	4
LMP 124		1.70	1.90	2.20	2.70		0.75	0.81	1.11	1.53

Flow rates [l/min]

Filter series	Length	Filter element design - N series							
		A03	A06	A10	A16	A25	M25 M60 M90	P10	P25
LMP 124	1	39	41	58	60	69	99	84	85
	2	47	53	68	69	77	99	90	91
	3	59	61	73	77	86	99	92	93
	4	70	78	84	86	93	100	94	95

Maximum flow rate for a complete return/suction filter with a pressure drop Δp = 1.2 bar.
The reference fluid has a kinematic viscosity of 30 mm^2/s (cSt) and a density of 0.86 kg/dm^3.
For different pressure drop or fluid viscosity we recommend to use our selection software available on www.mpfiltri.com.
You can also calculate the right size using the formulas present on the FILTER SIZING paragraph at the beginning of the full catalogue or at the beginning of the filter family brochure.
Please, contact our Sales Department for further additional information.

Hydraulic symbols - Valves option

Multiport

IN - Return
OUT 1 - Tank
OUT 2 - Pump

Valves C option

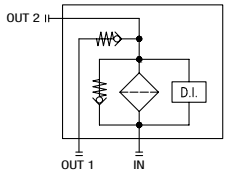

Valves D option

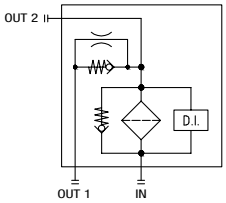

Valves E option

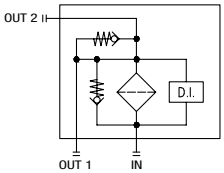

Valves F option

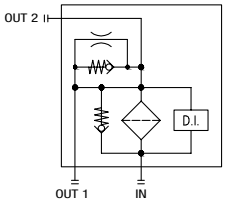

Multiport

IN - Return
OUT 1 - Pump
OUT 2 - Tank

Valves G option

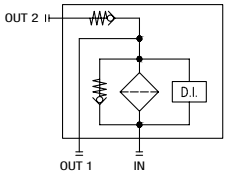

Valves H option

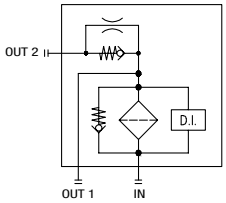

Pressure drop

Filter housings Δp pressure drop

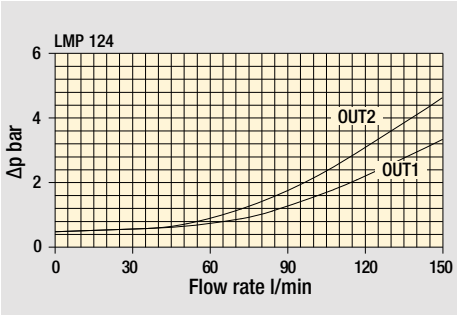

Bypass valve pressure drop

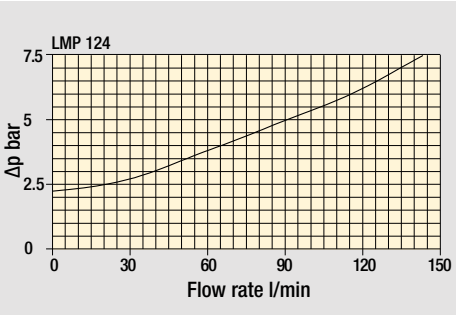

OUT 1: Valves option G/H
OUT 2: Valves option C/D/E/F

Designation & Ordering code

COMPLETE FILTER

Configuration example: LMP124 | 4 | C | A | F | 1 | A10 | N | P01

Series and size
LMP124

Filter length
1 | 2 | 3 | 4 |

Hydraulic diagram configuration - see page 289
C | D | E | F | G | H |

Seals and treatments
A NBR
V FPM

Connections
B G 1”
F SAE 16 - 1 5/16” - 12 UN

Connection for indicator
1 Without
2 With connection G 1/8” for clogging indicator
3 With connection G 1/4” for clogging indicator
4 With connection for differential pressure indicator

Filtration rating (filter media)

A03	Inorganic microfiber 3 µm	**M25**	Wire mesh 25 µm
A06	Inorganic microfiber 6 µm	**M60**	Wire mesh 60 µm
A10	Inorganic microfiber 10 µm	**M90**	Wire mesh 90 µm
A16	Inorganic microfiber 16 µm	**P10**	Resin impregnated paper 10 µm
A25	Inorganic microfiber 25 µm	**P25**	Resin impregnated paper 25 µm

Element Δp
N 20 bar

Execution
P01 MP Filtri standard
Pxx Customized

FILTER ELEMENT

Configuration example: CU110 | 4 | A10 | A | N | P01

Element series and size
CU110

Element length
1 | 2 | 3 | 4 |

Filtration rating (filter media)

A03	Inorganic microfiber 3 µm	**M25**	Wire mesh 25 µm
A06	Inorganic microfiber 6 µm	**M60**	Wire mesh 60 µm
A10	Inorganic microfiber 10 µm	**M90**	Wire mesh 90 µm
A16	Inorganic microfiber 16 µm	**P10**	Resin impregnated paper 10 µm
A25	Inorganic microfiber 25 µm	**P25**	Resin impregnated paper 25 µm

Seals
A NBR
V FPM

Element Δp
N 20 bar

Execution
P01 MP Filtri standard
Pxx Customized

CLOGGING INDICATORS

See page 722-723

Indicators on Return Line

BVA	Axial pressure gauge	**BEA**	Electrical pressure indicator
BVR	Radial pressure gauge	**BEM**	Electrical pressure indicator
BVP	Visual pressure indicator with automatic reset	**BET**	Electrical pressure indicator
BVQ	Visual pressure indicator with manual reset	**BLA**	Electrical / visual pressure indicator

Differential pressure indicators

DEA	Electrical differential pressure indicator	**DLE**	Electrical / visual differential pressure indicator
DEM	Electrical differential pressure indicator	**DTA**	Electronic differential pressure indicator
DEU	Electrical differential pressure indicator	**DVA**	Visual differential pressure indicator
DLA	Electrical / visual differential pressure indicator	**DVM**	Visual differential pressure indicator

PLUGS

See page 747

T2 Plug (not included)

LMP 124 MULTIPORT	
Filter length	**H [mm]**
1	182
2	215
3	265
4	365

Connections	R
B	M10
F	3/8" UNC

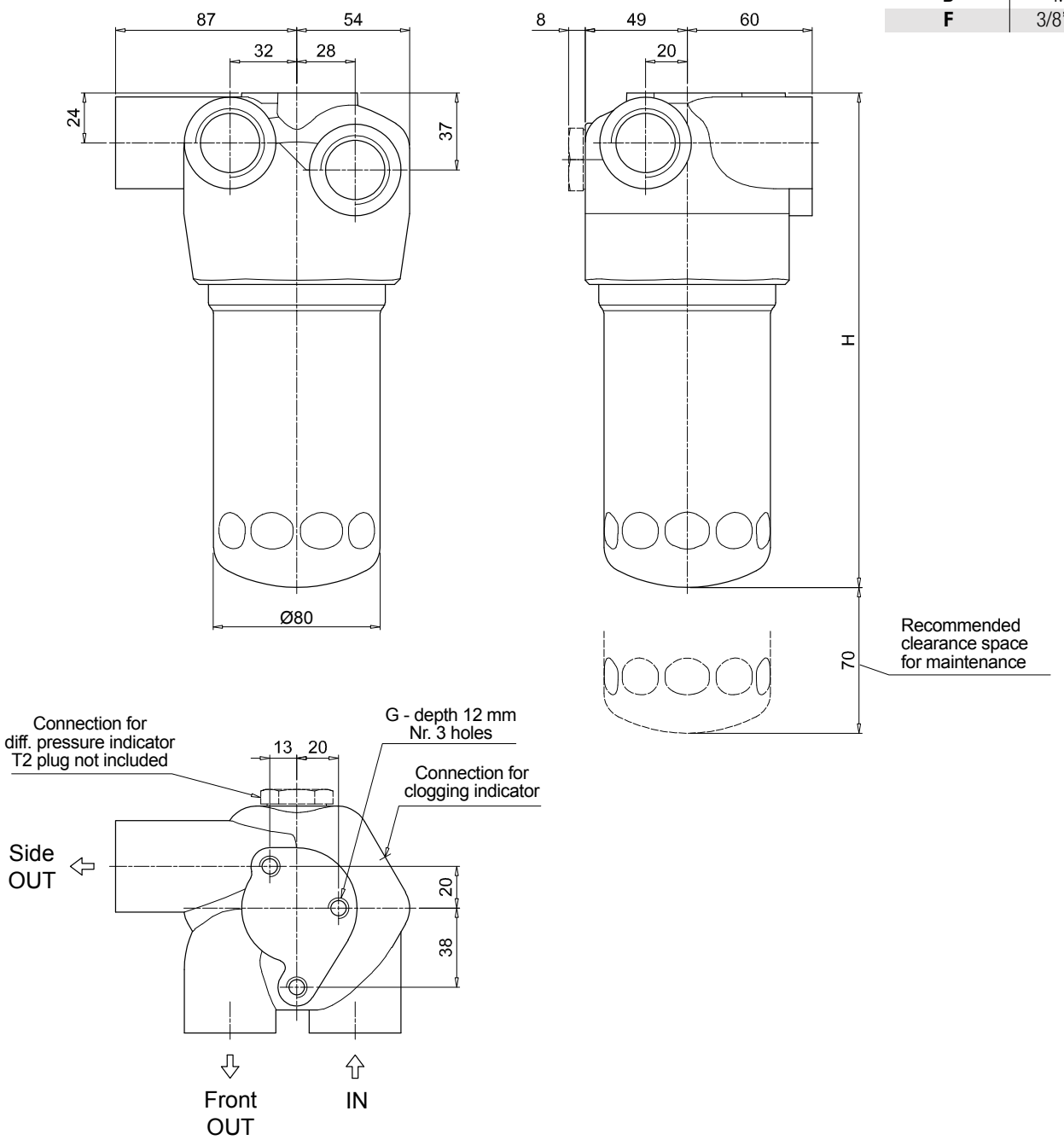

Order number for spare parts

LMP 124 MULTIPORT

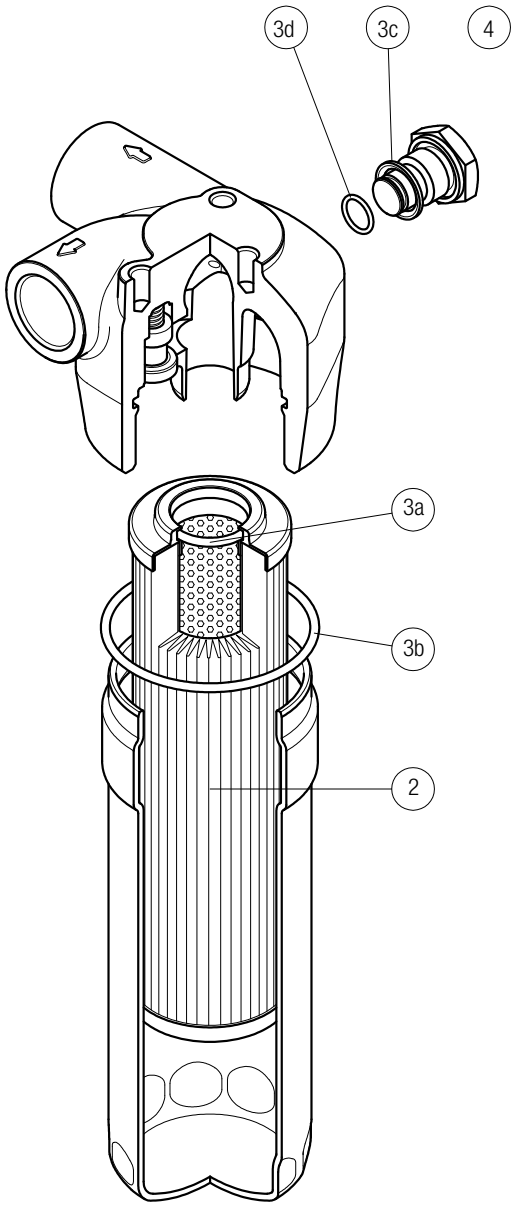

Item:	Q.ty: 1 pc. 2	Q.ty: 1 pc. 3 (3a ÷ 3d)		Q.ty: 1 pc. 4	
Filter series	Filter element	Seal Kit code number NBR	FPM	Indicator connection plug NBR	FPM
LMP 124 MULTIPORT	See order table	02050478	02050479	T2H	T2V

CLOGGING INDICATORS

Clogging indicators are devices that check the life time of the filter elements. They measure the pressure drop through the filter element directly connected to the filter housing.
These devices trip when the clogging of the filter element causes a pressure drop increasing across the filter element.
Filter elements are efficient only if their Dirt Holding Capacity is fully exploited. This is achieved by using filter housings equipped with clogging indicators.
The indicator is set to alarm before the element becomes fully clogged.

MP Filtri can supply indicators of the following designs:
- Vacuum switches and gauges
- Pressure switches and gauges
- Differential pressure indicators

These type of devices can be provided with a visual, electrical or both signals. The electronic differential pressure clogging indicator is also available. It provides both analogical 4-20 mA output and digital warning (75% of clogging) and alarm (clogging) outputs.

In the following pages you can find a reference guide about the types of clogging indicators available in the different families of MP Filtri's Hydraulic Filtration range of products.

Clogging Indicators

DESIGNATION, ORDERING CODES & TECHNICAL DATA

INDEX

	Page
QUICK REFERENCE GUIDE	714
CLOGGING INDICATORS ORDERING CODES	
SUCTION FILTERS INDICATORS	719
RETURN FILTERS INDICATORS	720
RETURN / SUCTION FILTERS INDICATORS	722
SPIN-ON FILTERS INDICATORS	724
LOW & MEDIUM PRESSURE FILTERS INDICATORS	726
HIGH PRESSURE FILTERS INDICATORS	727
STAINLESS STEEL HIGH PRESSURE FILTERS INDICATORS	728
FILTERS FOR POTENTIALLY EXPLOSIVE ATMOSPHERE INDICATORS	729
TECHNICAL DATA	
VACUUM INDICATORS	730
BAROMETRIC (PRESSURE) INDICATORS	732
DIFFERENTIAL PRESSURE INDICATORS	736
PLUGS	737

QUICK REFERENCE GUIDE

Ordering codes

Filter family	Filter series		Visual indicators	Electrical indicators	Electronic / Electrical-Visual indicators
SUCTION FILTERS	Suction Line	ELIXIR® SFEX060-110	VVB20P01 VVS20P01	VEB21AA50P01	VLB21AA51P01 VLB21AA52P01 VLB21AA53P01 VLB21AA71P01
		SFMC250	VVA20P01 VVR20P01	VEA21xA50P01 VEA21xA50P01UL	VLA21xA51P01 VLA21xA52P01 VLA21xA53P01 VLA21xA71P01
	Without bypass	SFSC 500 - 503 - 504 - 505 SFSC 510 - 535 - 540	VVA20P01 VVR20P01	VEA21xA50P01 VEA21xA50P01UL	VLA21xA51P01 VLA21xA52P01 VLA21xA53P01 VLA21xA71P01
RETURN FILTERS	With bypass 1.75 bar	ELIXIR® RFEX060-080-110-160	BVA14P01 BVR14P01 BVP15HP01 BVQ15HP01	BEA15HA50P01 BEA15HA50P01UL BEM15HA41P01	BLA15HA51P01 BLA15HA52P01 BLA15HA53P01 BLA15HA71P01
	Without bypass	ELIXIR® RFEX060-080-110-160	BVA25P01 BVR25P01 BVP20HP01 BVQ20HP01	BEA20HA50P01 BEA20HA50P01UL BEM20HA41P01	BLA20HA51P01 BLA20HA52P01 BLA20HA53P01 BLA20HA71P01
	With bypass 1.75 bar	MDH 250	BVA14P01 BVR14P01 BVP15HP01 BVQ15HP01 DVS12HP01	BEA15HA50P01 BEA15HA50P01UL BEM15HA41P01 DES12HA10P01 DES12HA30P01 DES12HA80P01	BLA15HA51P01 BLA15HA52P01 BLA15HA53P01 BLA15HA71P01
	With bypass 3 bar	MDH 250	BVA25P01 BVR25P01 BVP20HP01 BVQ20HP01 DVS25HP01	BEA20HA50P01 BEA20HA50P01UL BEM20HA41P01 DES25HA10P01 DES25HA30P01 DES25HA80P01	BLA20HA51P01 BLA20HA52P01 BLA20HA53P01 BLA20HA71P01
	With bypass 1.75 bar	MPFX MPTX MPF MPT MPH	BVA14P01 BVR14P01 BVP15HP01 BVQ15HP01	BEA15HA50P01 BEA15HA50P01UL BEM15HA41P01	BLA15HA51P01 BLA15HA52P01 BLA15HA53P01 BLA15HA71P01
	With bypass 3 bar	MPFX MPTX MPF MPT	BVA25P01 BVR25P01 BVP20HP01 BVQ20HP01	BEA20HA50P01 BEA20HA50P01UL BEM20HA41P01	BLA20HA51P01 BLA20HA52P01 BLA20HA53P01 BLA20HA71P01
	With bypass 2.5 bar	MPH			
	With bypass 4.5 bar	MPLX	DVA20xP01 DVM20xP01	DEA20xA50P01 DEA20xA50P01UL DEM20xx10P01 DEM20xx20P01 DEM20xx30P01 DEM20xx35P01 DEU20VA50P01UL	DLA20xA51P01 DLA20xA52P01 DLA20xA71P01 DLE20xA50P01 DLE20xF50P01 DTA20xF70P01
	With bypass 2.4 bar	FRI			

Ordering codes

Filter family	Filter series		Visual indicators	Electrical indicators	Electronic / Electrical-Visual indicators
RETURN / SUCTION FILTERS	With bypass valve 2.5 bar	MRSX 116 - 165 - 166 Suction line	VVB20P01 VVS20P01	VEB21AA50P01	VLB21AA51P01 VLB21AA52P01 VLB21AA53P01 VLB21AA71P01
		MRSX 116 - 165 - 166 Return line	BVA25P01 BVR25P01 BVP20HP01 BVQ20HP01	BEA20HA50P01 BEA20HA50P01UL BEM20HA41P01 BET25HF10P01 BET25HF30P01 BET25HF50P01	BLA20HA51P01 BLA20HA52P01 BLA20HA53P01 BLA20HA71P01
	With bypass valve 2.5 bar	LMP 124 MULTIPORT	BVA25P01 BVR25P01 BVP20HP01 BVQ20HP01 DVA20xP01 DVM20xP01	BEA20HA50P01 BEA20HA50P01UL BEM20HA41P01 BET25HF10P01 BET25HF30P01 BET25HF50P01 DEA20xA50P01 DEM20xx10P01 DEM20xx20P01 DEM20xx30P01 DEM20xx35P01 DEU20VA50P01UL	BLA20HA51P01 BLA20HA52P01 BLA20HA53P01 BLA20HA71P01 DLA20xA51P01 DLA20xA52P01 DLA20xA71P01 DLE20xA50P01 DLE20xF50P01 DTA20xF70P01
SPIN-ON FILTERS	Suction line	MPS 050 - 070 - 100 - 150 MPS 200 - 250 - 300 - 350	VVB20P01 VVS20P01	VEB21AA50P01	VLB21AA51P01 VLB21AA52P01 VLB21AA53P01 VLB21AA71P01
	Return line	MPS 050 - 070 - 100 - 150 MPS 200 - 250 - 300 - 350 MST 050 - 070 - 100 - 150	BVA14P01 BVR14P01 BVP15HP01 BVQ15HP01	BEA15HA50P01 BEA15HA50P01UL BEM15HA41P01	BLA15HA51P01 BLA15HA52P01 BLA15HA53P01 BLA15HA71P01
	In-line	MPS 051 - 071 - 101 - 151 MPS 301 - 351 MSH 050 - 070 - 100 - 150	DVA12xP01 DVM12xP01 DVA20xP01 DVM20xP01	DEA12xA50P01 DEM12xAxxP01 DEA20xA50P01 DEM20xAxxP01 DEU20VA50P01UL	DLA12xA51P01 DLA12xA52P01 DLA12xA71P01 DLA20xA51P01 DLA20xA52P01 DLA20xA71P01 DLE12xA50P01 DLE12xF50P01 DLE20xF50P01 DLE20xF50P01 DTA12xF70P01 DTA20xF70P01

QUICK REFERENCE GUIDE

Ordering codes

Filter family	Filter series		Visual indicators	Electrical indicators	Electronic / Electrical-Visual indicators
LOW & MEDIUM PRESSURE FILTERS	With bypass valve 3.5 bar	ELIXIR® LFEX 060-080-110-160	DVS25HP01	DES25HA10P01 DES25HA30P01 DES25HA80P01	
		LMP 110 LMP 112 - 116 - 118 - 119 MULTIPORT LMP 120 - 122 - 123 MULTIPORT LMP 210 - 211 - LDP LMP 400 - 401 & 430 - 431 LMP 900 - 901 LMP 902 - 903 LMP 950 - 951 LMP 952 - 953 - 954 LMD 211 - 400 - 401 - 431 - 951 - LDD	DVA20xP01 DVM20xP01	DEA20xA50P01 DEM20xx10P01 DEM20xx20P01 DEM20xx30P01 DEM20xx35P01 DEU20VA50P01UL	DLA20xA51P01 DLA20xA52P01 DLA20xA71P01 DLE20xA50P01 DLE20xF50P01 DTA20xF70P01
	With bypass valve 2.5 bar	LPH 630	DVA20xP01 DVM20xP01	DEA20xA50P01 DEM20xx10P01 DEM20xx20P01 DEM20xx30P01 DEM20xx35P01 DEU20VA50P01UL	DLA20xA51P01 DLA20xA52P01 DLA20xA71P01 DLE20xA50P01 DLE20xF50P01 DTA20xF70P01
	With bypass valve 1.75 bar	LPH 630	DVA12xP01 DVM12xP01	DEA12xA50P01 DEM12xx10P01 DEM12xx20P01 DEM12xx30P01 DEM12xx35P01	DLA12xA51P01 DLA12xA52P01 DLA12xA71P01 DLE12xA50P01 DLE12xF50P01 DTA12xF70P01
	Without bypass valve	ELIXIR® LFEX 060-080-110-160	DVS40HP01	DES40HA10P01 DES40HA30P01 DES40HA80P01	
		LMP 110 LMP 112 - 116 - 118 - 119 MULTIPORT LMP 120 - 122 - 123 MULTIPORT LMP 210 - 211 - LDP LMP 400 - 401 & 430 - 431 LMP 900 - 901 LMP 902 - 903 LMP 950 - 951 LMP 952 - 953 - 954 LMD 211 - 400 - 401 - 431 - 951 - LDD LPH 630	DVA50xP01 DVM50xP01	DEA50xA50P01 DEM50xx10P01 DEM50xx20P01 DEM50xx30P01 DEM50xx35P01 DEU50VA50P01UL	DLA50xA51P01 DLA50xA52P01 DLA50xA71P01 DLE50xA50P01 DLE50xF50P01 DTA50xF70P01
HIGH PRESSURE FILTERS	With bypass valve 6 bar	FMP 039 - 065 - 135 - 320 FHP 010 - 011 - 065 - 135 - 350 - 351 - 500 FMMX 050 - 150 FMM 050 - 150 FHA 051 FHM 006 - 007 - 010 - 050 - 065 - 135 - 320 - 500 FHB 050 - 135 - 320 FHF 325 FHD 021 - 051 - 326 - 333	DVA50xP01 DVM50xP01	DEA50xA50P01 DEM50xx10P01 DEM50xx20P01 DEM50xx30P01 DEM50xx35P01 DEU50VA50P01UL	DLA50xA51P01 DLA50xA52P01 DLA50xA71P01 DLE50xA50P01 DLE50xF50P01
	Without bypass valve	FMP 039 - 065 - 135 - 320 FHP 010 - 011 - 065 - 135 - 350 - 351 - 500 FMMX 050 - 150 FMM 050 - 150 FHA 051 FHM 006 - 007 - 010 - 050 - 065 - 135 - 320 - 500 FHB 050 - 135 - 320 FHF 325 FHD 021 - 051 - 326 - 333	DVA70xP01 DVA95xP01 DVM70xP01 DVM95xP01	DEA70xA50P01 DEA95xA50P01 DEM70xx10P01 DEM70xx20P01 DEM70xx30P01 DEM70xx35P01 DEU70VA50P01UL DEM95xx10P01 DEM95xx20P01 DEM95xx30P01 DEM95xx35P01	DLA70xA51P01 DLA70xA52P01 DLA70xA71P01 DLA95xA51P01 DLA95xA52P01 DLA95xA71P01 DLE70xA50P01 DLE70xF50P01 DLE95xA50P01 DLE95xF50P01 DTA70xF70P01 DTA95xF70P01

Ordering codes

Filter family	Filter series		Visual indicators	Electrical indicators	Electronic / Electrical-Visual indicators
STAINLESS STEEL HIGH PRESSURE FILTERS	With bypass valve 6 bar	FZH 012 - 040	DVZ50xP01	DEZ50xA50P01	DLZ50xA51P01 DLZ50xA52P01
	Without bypass valve	FZH 012 - 040	DVZ70xP01 DVZ95xP01	DEZ70xA50P01 DEZ95xA50P01	DLZ70xA51P01 DLZ70xA52P01 DLZ95xA51P01 DLZ95xA52P01
	With bypass valve 6 bar	FZP 039 - 136 FZB 039 FZM 039 FZD 051	DVX50xP01 DVY50xP01	DEX50xA50P01	DLX50xA51P01 DLX50xA52P01
	Without bypass valve	FZP 039 - 136 FZB 039 FZM 039 FZD 010 - 021 - 051	DVX70xP01 DVX95xP01 DVY70xP01 DVY95xP01	DEX70xA50P01 DEX95xA50P01	DLX70xA51P01 DLX70xA52P01 DLX95xA51P01 DLX95xA52P01
FILTERS FOR POTENTIALLY EXPLOSIVE ATMOSPHERE	With bypass valve 6 bar	FMMX 050 - 150	DVA50xP01 DVM50xP01	DEH50xA48P01 DEH50xA49P01 DEH50xA70P01	
	Without bypass valve	FMMX 050 - 150	DVA70xP01 DVA95xP01 DVM70xP01 DVM95xP01	DEH70xA48P01 DEH70xA49P01 DEH70xA70P01	
	With bypass valve 6 bar	FZP 039 - 136	DVX50xP01 DVY50xP01	DEH50xA48P01 DEH50xA49P01 DEH50xA70P01	
	Without bypass valve	FZP 039 - 136	DVX70xP01 DVX95xP01 DVY70xP01 DVY95xP01	DEH70xA48P01 DEH70xA49P01 DEH70xA70P01	
	With bypass valve 6 bar	FZH 012 - 040	DVZ50xP01		
	Without bypass valve	FZH 012 - 040	DVZ70xP01 DVZ95xP01		

Suitable indicator types

V ACUUM INDICATORS

Vacuum indicators are used on the Suction line to check the efficiency of the filter element.
They measure the pressure downstream of the filter element.
Standard items are produced with R 1/4” EN 10226 connection.
Available products with R 1/8” EN 10226 to be fitted on MPS series.
Vacuum indicators are identified in the Hydraulic Filtration catalogue and in the Quick Reference Guide table by the letter "V".

Example:
V VVB20P01

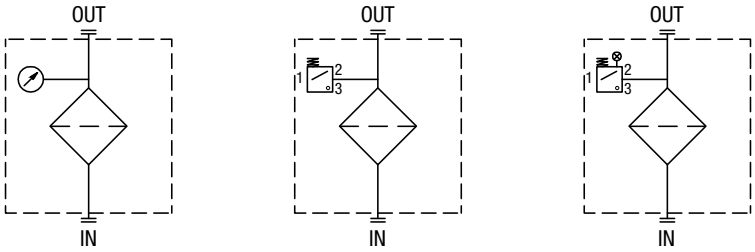

B AROMETRIC (PRESSURE) INDICATORS

Pressure indicators are used on the Return line to check the efficiency of the filter element.
They measure the pressure upstream of the filter element.
Standard items are produced with R 1/8” EN 10226 connection.
Barometric (pressure) indicators are identified in the Hydraulic Filtration catalogue and in the Quick Reference Guide table by the letter "B"

Example:
B BVA14P01

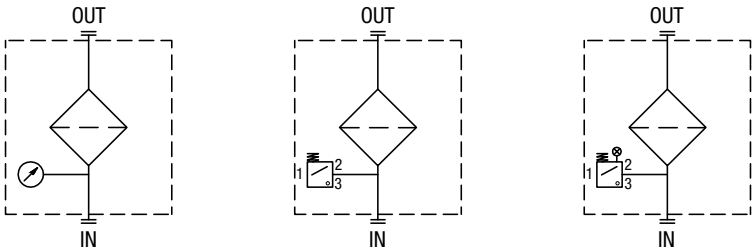

D IFFERENTIAL PRESSURE INDICATORS

Differential pressure indicators are used on the Pressure line to check the efficiency of the filter element.
They measure the pressure upstream and downstream of the filter element (differential pressure).
Standard items are produced with special connection G 1/2” size.
Also available in Stainless Steel models.
Differential pressure indicators are identified in the Hydraulic Filtration catalogue and in the Quick Reference Guide table by the letter "D"

Example:
D DVA20xP01

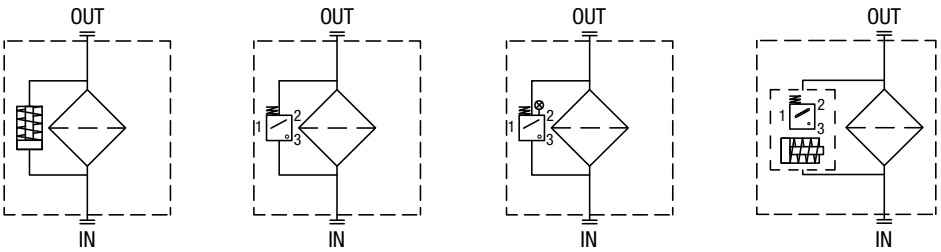

Designation & Ordering code

VACUUM INDICATORS

Configuration example 1:	VE	A	21	V	A	50	P01	EX
Configuration example 2:	VL	B	21	A	A	71	P01	
Configuration example 3:	VV	R	20				P01	

Series

VE	Electrical vacuum indicator
VL	Electrical/Visual vacuum indicator
VV	Vacuum gauge

Type VE - VL

A	Connection EN 10226 - R1/4”
B	Connection EN 10226 - R1/8”

Type VV

		SFxC	SFEX
A	Axial connection EN 10226 - R1/4”	•	-
B	Axial connection EN 10226 - R1/8”	-	•
R	Radial connection EN 10226 - R1/4”	•	-
S	Radial connection EN 10226 - R1/8”	-	•

Vacuum setting

		VE	VL	VV
20	-0.16 bar	-	-	•
21	-0.21 bar	•	•	-

Seals

		VEA - VLA	VEB - VLB
A	NBR	•	•
V	FPM	•	-

Thermostat

		VE	VL
A	Without	•	•

Electrical connections

		VE	VL
50	Connection EN 175301-803	•	-
51	Connection EN 175301-803, transparent base with lamps 24 Vdc	-	•
52	Connection EN 175301-803, transparent base with lamps 110 Vdc	-	•
53	Connection EN 175301-803, transparent base with lamps 230 Vac	-	•
71	Connection IEC 61076-2-101 D (M12), black base with lamps 24 Vdc	-	•

Option

P01	MP Filtri standard
Pxx	Customized

Certifications

		VEA21A	VEA21V	VEB	VL	VV
	Without	•	•	•	•	•
EX	ATEX certification	•	•	•	-	-
UL	UL certification	•	-	-	-	-

Designation & Ordering code

BAROMETRIC (PRESSURE) INDICATORS

Configuration example 1:	BE	A	15	H	A	41	P01	EX
Configuration example 2:	BL	A	20	H	A	71	P01	
Configuration example 3:	BV	R	14				P01	
Configuration example 4:	BV	P	20	H			P01	

Series	
BE	Electrical pressure indicator
BL	Electrical/Visual pressure indicator
BV	Visual pressure indicator

Type	BE	BL
A Standard type	•	•
M With wired electrical connection	•	-
T With thermal switch	•	-

BV	
A	Axial connection pressure gauge
R	Radial connection pressure gauge
P	Visual indicator with automatic reset
Q	Visual indicator with manual reset

Pressure setting	BEA-BEM	BET	BLA	BVA-BVR	BVP-BVQ
14 1.4 bar	-	-	-	•	-
15 1.5 bar	•	-	•	-	•
20 2.0 bar	•	•	•	-	•
25 2.5 bar	-	•	-	•	-

Seals	BE	BLA	BVA-BVR	BVP-BVQ
H HNBR	•	•	-	•

Thermostat	BEA-BEM	BET	BLA
A Without thermostat	•	-	•
F With thermostat	-	•	-

Electrical connections	BEA	BEM	BET	BL
10 Connection AMP Superseal series 1,5	-	-	•	-
30 Connection Deutsch DT-04-2-P	-	-	•	-
41 Connection via four-core cable	-	•	-	-
50 Connection EN 175301-803	•	-	-	-
51 Connection EN 175301-803, transparent base with lamps 24 Vdc	-	-	-	•
52 Connection EN 175301-803, transparent base with lamps 110 Vdc	-	-	-	•
53 Connection EN 175301-803, transparent base with lamps 230 Vac	-	-	-	•
71 Connection IEC 61076-2-101 D (M12), black base with lamps 24 Vdc	-	-	-	•

Option	
P01	MP Filtri standard
Pxx	Customized

Certifications	BEA	BEM-BET	BL	BV
Without	•	•	•	•
EX ATEX certification	•	-	-	-
UL UL certification	•	-	-	-

DIFFERENTIAL PRESSURE INDICATORS

Configuration example 1:	DE	M	20	H	F	50	P01	
Configuration example 2:	DE	U	50	V	A	50	P01	UL
Configuration example 3:	DL	E	20	V	A	71	P01	
Configuration example 4:	DT	A	20	H	F	70	P01	
Configuration example 5:	DV	M	20	V			P01	

Series	
DE	Electrical differential pressure indicator
DL	Electrical/Visual differential pressure indicator
DT	Electrical differential pressure indicator
DV	Visual differential pressure indicator

Type	DE	DL	DT
A Standard type	•	•	•
M With wired electrical connection	•	-	-
U Standard type 210 bar, UL certified	•	-	-
E For high power supply	-	•	-
S Compact version	•	-	-

DV	
A	With automatic reset
M	With manual reset
S	With automatic reset

Pressure setting	DEA	DEM	DEU	DES	DL	DT	DVA	DVM	DVS
12 1.2 bar	-	-	-	•	-	-	-	-	•
20 2.0 bar	•	•	•	-	•	•	•	•	
25 2.5 bar	-	-	-	•	-	-	-	-	•

Seals	DEA	DEM	DEU	DES	DL	DT	DVA	DVM	DVS
H HNBR	•	•	-	•	•	•	•	•	•
V FPM	•	•	•	-	•	•	•	•	-

Thermostat	DEA	DEM	DEU	DES	DLA	DLE	DT
A Without thermostat	•	•	•	•	•	•	-
F With thermostat	-	•	-	-	-	•	•

Electrical connections	DEA	DEM	DEU	DES	DLA	DLE	DT
10 Connection AMP Superseal series 1.5	-	•	-	•	-	-	-
20 Connection AMP Timer Junior	-	•	-	-	-	-	-
30 Connection Deutsch DT-04-2-P	-	•	-	•	-	-	-
35 Connection Deutsch DT-04-3-P	-	•	-	-	-	-	-
50 Connection EN 175301-803	•	-	•	-	-	•	-
51 Connection EN 175301-803, transparent base with lamps 24 Vdc	-	-	-	-	•	-	-
52 Connection EN 175301-803, transparent base with lamps 110 Vdc	-	-	-	-	•	-	-
70 Connection IEC 61076-2-101 D (M12)	-	-	-	-	-	-	•
71 Connection IEC 61076-2-101 D (M12), black base with lamps 24 Vdc	-	-	-	-	•	-	-
80 Connection Stud #10-32 UNF	-	-	-	•	-	-	-

Option	
P01	MP Filtri standard
Pxx	Customized

Certifications	DEU	OTHERS
Without	-	•
UL UL certification	•	-

PLUGS

Configuration example	T2	H

Series	
T2	Plug
T4	Plug

Seals	T2	T4
A NBR	-	•
H HNBR	•	-
V FPM	•	-

Designation & Ordering code

VACUUM INDICATORS

Configuration example 1:	VE	A	21	V	A	50	P01	EX
Configuration example 2:	VL	B	21	A	A	71	P01	
Configuration example 3:	VV	R	20				P01	

Series

VE	Electrical vacuum indicator
VL	Electrical/Visual vacuum indicator
VV	Vacuum gauge

Type VE - VL

A	Connection EN 10226 - R1/4”
B	Connection EN 10226 - R1/8”

Type VV

A	Axial connection EN 10226 - R1/4”
B	Axial connection EN 10226 - R1/8”
R	Radial connection EN 10226 - R1/4”
S	Radial connection EN 10226 - R1/8”

Vacuum setting	VE	VL	VV
20 -0.16 bar	-	-	•
21 -0.21 bar	•	•	-

Seals	VEA - VLA	VEB - VLB
A NBR	•	•
V FPM	•	-

Thermostat	VE	VL
A Without thermostat	•	•

Electrical connections	VE	VL
50 Connection EN 175301-803	•	-
51 Connection EN 175301-803, transparent base with lamps 24 Vdc	-	•
52 Connection EN 175301-803, transparent base with lamps 110 Vdc	-	•
53 Connection EN 175301-803, transparent base with lamps 230 Vac	-	•
71 Connection IEC 61076-2-101 D (M12), black base with lamps 24 Vdc	-	•

Option

P01	MP Filtri standard
Pxx	Customized

Certifications	VEA21A	VEA21V	VEB	VL	VV
Without	•	•	•	•	•
EX ATEX certification	•	•	•	-	-
UL UL certification	•	-	-	-	-

BAROMETRIC (PRESSURE) INDICATORS

Configuration example 1:	BE	M	15	H	A	41	P01	EX
Configuration example 2:	BL	A	20	H	A	71	P01	
Configuration example 3:	BV	R	14				P01	
Configuration example 4:	BV	P	20	H			P01	

Series

BE	Electrical pressure indicator
BL	Electrical/Visual pressure indicator
BV	Visual pressure indicator

Type	BE	BL
A Standard type	•	•
M With wired electrical connection	•	-
T With thermal switch	•	-

BV	
A	Axial connection pressure gauge
R	Radial connection pressure gauge
P	Visual indicator with automatic reset
Q	Visual indicator with manual reset

Pressure setting	BEA-BEM	BET	BLA	BVA-BVR	BVP-BVQ
14 1.4 bar	-	-	-	•	-
15 1.5 bar	•	-	•	-	-
20 2.0 bar	•	•	•	-	•
25 2.5 bar	-	•	-	•	-

Seals	BE	BLA	BVP-BVQ
H HNBR	•	•	•

Thermostat	BEA-BEM	BET	BLA
A Without thermostat	•	-	•
F With thermostat	-	•	-

Electrical connections	BEA	BEM	BET	BL
10 Connection AMP Superseal series 1.5	-	-	•	-
30 Connection Deutsch DT-04-2-P	-	-	•	-
41 Connection via four-core cable	-	•	-	-
50 Connection EN 175301-803	•	-	•	-
51 Connection EN 175301-803, transparent base with lamps 24 Vdc	-	-	-	•
52 Connection EN 175301-803, transparent base with lamps 110 Vdc	-	-	-	•
53 Connection EN 175301-803, transparent base with lamps 230 Vac	-	-	-	•
71 Connection IEC 61076-2-101 D (M12), black base with lamps 24 Vdc	-	-	-	•

Option

P01	MP Filtri standard
Pxx	Customized

Certifications	BEA	BEM-BET	BL	BV
Without	•	•	•	•
EX ATEX certification	•	-	-	-
UL UL certification	•	-	-	-

DIFFERENTIAL PRESSURE INDICATORS

Configuration example 1:	DE	M	12	H	F	50	P01	
Configuration example 2:	DE	U	50	V	A	50	P01	UL
Configuration example 3:	DL	E	20	V	A	71	P01	
Configuration example 4:	DT	A	50	H	F	70	P01	
Configuration example 5:	DV	M	70	V			P01	

Series

DE	Electrical differential pressure indicator
DL	Electrical/Visual differential pressure indicator
DT	Electronic differential pressure indicator
DV	Visual differential pressure indicator

Type	DE	DL	DT
A Standard type	•	•	•
M With wired electrical connection	•	-	-
U Standard type 210 bar, UL certified	•	-	-
E For high power supply	-	•	-

DV	
A	With automatic reset
M	With manual reset

Pressure setting	DEA	DEM	DEU	DLA	DLE	DTA	DVA	DVM
20 2.0 bar	•	•	•	•	•	•	•	•

Seals	DEA	DEM	DEU	DLA	DLE	DTA	DVA	DVM
H HNBR	•	•	-	•	•	•	•	•
V FPM	•	•	•	•	•	•	•	•

Thermostat	DEA	DEM	DEU	DLA	DLE	DT
A Without thermostat	•	•	•	•	•	-
F With thermostat	-	•	-	-	•	•

Electrical connections	DEA	DEM	DEU	DLA	DLE	DT
10 Connection AMP Superseal series 1.5	-	•	-	-	-	-
20 Connection AMP Timer Junior	-	•	-	-	-	-
30 Connection Deutsch DT-04-2-P	-	•	-	-	-	-
35 Connection Deutsch DT-04-3-P	-	•	-	-	-	-
50 Connection EN 175301-803	•	-	•	-	•	-
51 Connection EN 175301-803, transparent base with lamps 24 Vdc	-	-	-	•	-	-
52 Connection EN 175301-803, transparent base with lamps 110 Vdc	-	-	-	•	-	-
70 Connection IEC 61076-2-101 D (M12)	-	-	-	-	-	•
71 Connection IEC 61076-2-101 D (M12), black base with lamps 24 Vdc	-	-	-	•	-	-

Option

P01	MP Filtri standard
Pxx	Customized

Certifications	DEU	OTHERS
Without	-	•
UL UL certification	•	-

PLUGS

Configuration example	T2	H

Series

T2	Plug

Seals

H	HNBR
V	FPM

Designation & Ordering code

VACUUM INDICATORS

Configuration example 1:	VE	B	21	A	A	50	P01	EX
Configuration example 2:	VL	B	21	A	A	71	P01	
Configuration example 3:	VV	S	20				P01	

Series

- **VE** Electrical vacuum indicator
- **VL** Electrical/Visual vacuum indicator
- **VV** Vacuum gauge

Type VE - VL

- **B** Connection EN 10226 - R1/8”

Type VV

- **B** Axial connection EN 10226 - R1/8”
- **S** Radial connection EN 10226 - R1/8”

Vacuum setting	VE	VL	VV
20 -0.16 bar	-	-	•
21 -0.21 bar	•	•	-

Seals	VE	VL
A NBR	•	•

Thermostat	VE	VL
A Without thermostat	•	•

Electrical connections	VE	VL
50 Connection EN 175301-803	•	-
51 Connection EN 175301-803, transparent base with lamps 24 Vdc	-	•
52 Connection EN 175301-803, transparent base with lamps 110 Vdc	-	•
53 Connection EN 175301-803, transparent base with lamps 230 Vac	-	•
71 Connection IEC 61076-2-101 D (M12), black base with lamps 24 Vdc	-	•

Option

- **P01** MP Filtri standard
- **Pxx** Customized

Certifications	VEB	VL	VV
Without	•	•	•
EX ATEX certification	•	-	-
UL UL certification	-	-	-

BAROMETRIC (PRESSURE) INDICATORS

Configuration example 1:	BE	M	15	H	A	41	P01
Configuration example 2:	BL	A	20	H	A	71	P01
Configuration example 3:	BV	R	14				P01
Configuration example 4:	BV	P	20	H			P01

Series

- **BE** Electrical pressure indicator
- **BL** Electrical/Visual pressure indicator
- **BV** Visual pressure indicator

Type	BE	BL
A Standard type	•	•
M With wired electrical connection	•	-

BV

- **A** Axial connection pressure gauge
- **R** Radial connection pressure gauge
- **P** Visual indicator with automatic reset
- **Q** Visual indicator with manual reset

Pressure setting	BEA-BEM	BLA	BVA-BVR	BVP-BVQ
14 1.4 bar	-	-	•	-
15 1.5 bar	•	•	-	-
20 2 bar	•	•	-	•
25 2.5 bar	-	-	•	-

Seals	BE	BLA	BVA-BVR	BVP-BVQ
H HNBR	•	•	-	•

Thermostat	BEA-BEM	BLA	BV
A Without thermostat	•	•	-

Electrical connections	BEA	BEM	BL
10 Connection AMP Superseal series 1.5	-	-	-
30 Connection Deutsch DT-04-2-P	-	-	-
41 Connection via four-core cable	-	•	-
50 Connection EN 175301-803	•	-	-
51 Connection EN 175301-803, transparent base with lamps 24 Vdc	-	-	•
52 Connection EN 175301-803, transparent base with lamps 110 Vdc	-	-	•
53 Connection EN 175301-803, transparent base with lamps 230 Vac	-	-	•
71 Connection IEC 61076-2-101 D (M12), black base with lamps 24 Vdc	-	-	•

Option

- **P01** MP Filtri standard
- **Pxx** Customized

Certifications	BEA	BEM-BET	BL	BV
Without	•	•	•	•
EX ATEX certification	•	-	-	-
UL UL certification	•	-	-	-

DIFFERENTIAL PRESSURE INDICATORS

Configuration example 1:	DE	M	12	H	F	50	P01	
Configuration example 2:	DE	U	50	V	A	50	P01	UL
Configuration example 3:	DL	E	20	V	A	71	P01	
Configuration example 4:	DT	A	50	H	F	70	P01	
Configuration example 5:	DV	M	70	V			P01	

Series

DE	Electrical differential pressure indicator
DL	Electrical/Visual differential pressure indicator
DT	Electronic differential pressure indicator
DV	Visual differential pressure indicator

Type	DE	DL	DT
A Standard type	•	•	•
M With wired electrical connection	•	-	-
U Standard type 210 bar, UL certified	•	-	-
E For high power supply	-	•	-

DV	
A	With automatic reset
M	With manual reset

Pressure setting	DEA	DEM	DEU	DLA	DLE	DTA	DVA	DVM
12 1.2 bar	•	•	-	•	•	•	•	•
20 2.0 bar	•	•	•	•	•	•	•	•

Seals	DEA	DEM	DEU	DLA	DLE	DTA	DVA	DVM
H HNBR	•	•	-	•	•	•	•	•
V FPM	•	•	•	•	•	•	•	•

Thermostat	DEA	DEM	DEU	DLA	DLE	DT
A Without thermostat	•	•	•	•	•	-
F With thermostat	-	•	-	-	•	•

Electrical connections	DEA	DEM	DEU	DLA	DLE	DT
10 Connection AMP Superseal series 1.5	-	•	-	-	-	-
20 Connection AMP Timer Junior	-	•	-	-	-	-
30 Connection Deutsch DT-04-2-P	-	•	-	-	-	-
35 Connection Deutsch DT-04-3-P	-	•	-	-	-	-
50 Connection EN 175301-803	•	-	•	-	•	-
51 Connection EN 175301-803, transparent base with lamps 24 Vdc	-	-	-	•	-	-
52 Connection EN 175301-803, transparent base with lamps 110 Vdc	-	-	-	•	-	-
70 Connection IEC 61076-2-101 D (M12)	-	-	-	-	-	•
71 Connection IEC 61076-2-101 D (M12), black base with lamps 24 Vdc	-	-	-	•	-	-

Option

P01	MP Filtri standard
Pxx	Customized

Certifications	DEU	OTHERS
Without	-	•
UL UL certification	•	-

PLUGS

Configuration example	T2	H

Series

T2	Plug

Seals

H	HNBR
V	FPM

Designation & Ordering code

DIFFERENTIAL PRESSURE INDICATORS

Configuration example 1:	DE	M	20	H	F	50	P01	
Configuration example 2:	DE	U	50	V	A	50	P01	UL
Configuration example 3:	DL	E	50	V	A	71	P01	
Configuration example 4:	DT	A	20	H	F	70	P01	
Configuration example 5:	DV	M	50	V			P01	

Series	
DE	Electrical differential pressure indicator
DL	Electrical/Visual differential pressure indicator
DT	Electronic differential pressure indicator
DV	Visual differential pressure indicator

Type	DE	DL	DT
A Standard type	•	•	•
M With wired electrical connection	•	-	-
U Standard type 210 bar, UL certified	•	-	-
E For high power supply	-	•	-
S Compact version	•	-	-

DV	
A	With automatic reset
M	With manual reset
S	With automatic reset

Pressure setting	DEA	DEM	DEU	DES	DLA	DLE	DTA	DVA	DVM	DVS
12 1.2 bar	•	•	-	•	•	•	•	•	•	•
20 2.0 bar	•	•	•	-	•	•	•	•	•	-
25 2.5 bar	-	-	-	-	-	-	-	-	-	•
40 4.0 bar	-	-	-	•	-	-	-	-	-	•
50 5.0 bar	•	•	•	-	•	•	•	•	•	-

Seals	DEA	DEM	DEU	DES	DL	DT	DVA	DVM	DVS
H HNBR	•	•	-	•	•	•	•	•	•
V FPM	•	•	•	-	•	•	•	•	-

Thermostat	DEA	DEM	DEU	DES	DLA	DLE	DT
A Without thermostat	•	•	•	•	•	•	-
F With thermostat	-	•	-	-	-	•	•

Electrical connections	DEA	DEM	DEU	DES	DLA	DLE	DT
10 Connection AMP Superseal series 1.5	-	•	-	•	-	-	-
20 Connection AMP Timer Junior	-	•	-	-	-	-	-
30 Connection Deutsch DT-04-2-P	-	•	-	•	-	-	-
35 Connection Deutsch DT-04-3-P	-	•	-	-	-	-	-
50 Connection EN 175301-803	•	-	•	-	-	•	-
51 Connection EN 175301-803, transparent base with lamps 24 Vdc	-	-	-	-	•	-	-
52 Connection EN 175301-803, transparent base with lamps 110 Vdc	-	-	-	-	•	-	-
70 Connection IEC 61076-2-101 D (M12)	-	-	-	-	-	-	•
71 Connection IEC 61076-2-101 D (M12), black base with lamps 24 Vdc	-	-	-	-	•	-	-
80 Connection Stud #10-32 UNF	-	-	-	•	-	-	-

Option	
P01	MP Filtri standard
Pxx	Customized

Certifications	DEU	OTHERS
Without	-	•
UL UL certification	•	-

PLUGS

Configuration example	T2	H

Series	
T2	Plug
T4	Plug

Seals	T2	T4
A NBR	-	•
H HNBR	•	-
V FPM	•	-

DIFFERENTIAL PRESSURE INDICATORS

Configuration example 1:	DE	M	12	H	F	50	P01	
Configuration example 2:	DE	U	50	V	A	50	P01	UL
Configuration example 3:	DL	E	20	V	A	71	P01	
Configuration example 4:	DT	A	50	H	F	70	P01	
Configuration example 5:	DV	M	70	V			P01	

Series

DE	Electrical differential pressure indicator
DL	Electrical/Visual differential pressure indicator
DT	Electronic differential pressure indicator
DV	Visual differential pressure indicator

Type

		DE	DL	DT
A	Standard type	•	•	•
M	With wired electrical connection	•	-	-
U	Standard type 210 bar, UL certified	•	-	-
E	For high power supply	-	•	-

DV

A	With automatic reset
M	With manual reset

Pressure setting

		DEA	DEM	DEU	DLA	DLE	DTA	DVA	DVM
50	5.0 bar	•	•	•	•	•	•	•	•
70	7.0 bar	•	•	•	•	•	•	•	•
95	9.5 bar	•	•	-	•	•	•	•	•

Seals

		DEA	DEM	DEU	DLA	DLE	DTA	DVA	DVM
H	HNBR	•	•	-	•	•	•	•	•
V	FPM	•	•	•	•	•	•	•	•

Thermostat

		DEA	DEM	DEU	DLA	DLE	DT
A	Without thermostat	•	•	•	•	•	-
F	With thermostat	-	•	-	-	•	•

Electrical connections

		DEA	DEM	DEU	DLA	DLE	DT
10	Connection AMP Superseal series 1.5	-	•	-	-	-	-
20	Connection AMP Timer Junior	-	•	-	-	-	-
30	Connection Deutsch DT-04-2-P	-	•	-	-	-	-
35	Connection Deutsch DT-04-3-P	-	•	-	-	-	-
50	Connection EN 175301-803	•	-	•	-	•	-
51	Connection EN 175301-803, transparent base with lamps 24 Vdc	-	-	-	•	-	-
52	Connection EN 175301-803, transparent base with lamps 110 Vdc	-	-	-	•	-	-
70	Connection IEC 61076-2-101 D (M12)	-	-	-	-	-	•
71	Connection IEC 61076-2-101 D (M12), black base with lamps 24 Vdc	-	-	-	•	-	-

Option

P01	MP Filtri standard
Pxx	Customized

Certifications

		DEU	OTHERS
	Without	-	•
UL	UL certification	•	-

PLUGS

Configuration example	T2	H

Series

T2	Plug

Seals

H	HNBR
V	FPM

STAINLESS STEEL HIGH PRESSURE FILTERS

Designation & Ordering code

DIFFERENTIAL PRESSURE INDICATORS

Configuration example 1:	DE	Z	50	H	A	50	P01
Configuration example 2:	DL	X	70	V	A	52	P01

Series

DE	Electrical differential pressure indicator
DL	Electrical / Visual differential pressure indicator
DV	Visual differential pressure indicator

Type		DE	DL	DV
X	Stainless steel standard type 420 bar	•	•	•
Y	Stainless steel optional type 420 bar	-	-	•
Z	Stainless steel 700 bar (only for FZH)	•	•	•

Pressure setting		DEX	DEZ	DL	DV
50	5.0 bar	•	•	•	•
70	7.0 bar	•	•	•	•
95	9.5 bar	•	•	•	•

Seals		DEX	DEZ	DL	DV
H	HNBR	•	•	•	•
V	FPM	-	-	•	•
F	MFQ	•	•	-	-

Thermostat		DEX	DEZ	DL	DV
A	Without thermostat	•	•	•	-

Electrical connections		DEX	DEZ	DL
50	Connection EN 175301-803	•	•	-
51	Connection EN 175301-803, transparent base with lamps 24 Vdc	-	-	•
52	Connection EN 175301-803, transparent base with lamps 110 Vdc	-	-	•

Option

P01	MP Filtri standard
Pxx	Customized

PLUGS

Configuration example	X2	H

Series

X2	Stainless Steel plug 420 bar
X3	Stainless Steel plug 700 bar (only for FZH)

Seals

H	HNBR
V	FPM
F	MFQ

FILTERS FOR POTENTIALLY EXPLOSIVE ATMOSPHERE

Designation & Ordering code

DIFFERENTIAL PRESSURE INDICATORS

Configuration example 1:	DE	H	50	F	A	48	P01
Configuration example 2:	DV	X	70	V			P01

Series	
DE	Electrical differential pressure indicator
DV	Visual differential pressure indicator

Type		DE	DV
A	With automatic reset	-	•
M	With manual reset	-	•
H	Stainless steel hazardous area 420 bar	•	-
X	Stainless steel standard type 420 bar	-	•
Y	Stainless steel optional type 420 bar	-	•

Pressure setting		DEH	DVA	DVM	DVX	DVY
50	5.0 bar	•	•	•	•	•
70	7.0 bar	•	•	•	•	•
95	9.5 bar	-	•	•	•	•

Seals		DEH	DVA	DVM	DVX	DVY
H	HNBR	-	•	•	•	•
V	FPM	•	•	•	•	•
F	MFQ	•	-	-	-	-

Thermostat		DEH
A	Without thermostat	•
T	With thermostat	-

Electrical connections		DEH
48	Connection via three-core cable - fitting M20x1.5	•
49	Connection via four-core cable - fitting 1/2” NPT	•
70	Connection IEC 61076-2-101 D (M12)	•

Option	
P01	MP Filtri standard
Pxx	Customized

PLUGS

Configuration example	X2	H

Series	
T2	Plug
X2	Stainless Steel plug 420 bar
X3	Stainless Steel plug 700 bar (only for FZH)

Seals		T2	X2	X3
H	HNBR	•	•	•
V	FPM	•	•	•
F	MFQ	-	•	•

Technical data

VE*50 (EX)

Electrical Vacuum Indicator
Connection: EN 175301-803

R	Ordering code
EN 10226 - R1/4”	VE A 21 x A 50 P01
	VE A 21 x A 50 P01 EX
EN 10226 - R1/8”	VE B 21 A A 50 P01
	VE B 21 A A 50 P01 EX

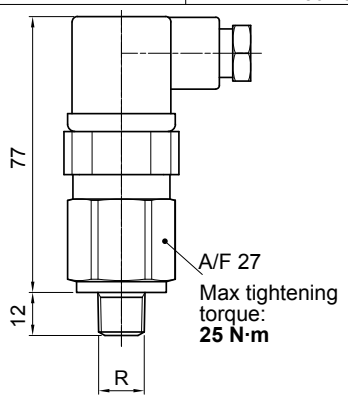

Hydraulic symbol

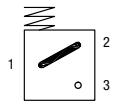

Electrical symbol

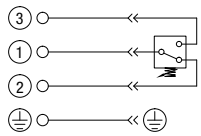

- Certification: ATEX, IECEx
- Certification included in EX version

Materials
- Body: Brass
- Base: Black polyamide
- Contacts: Silver
- Seal: VEA: NBR/FPM
  VEB: NBR

Technical data
- Vacuum setting: 0.21 bar ±10%
- Max working pressure: 10 bar
- Proof pressure: 15 bar
- Working temperature: From -25 °C to +80 °C
- Compatibility with fluids: Mineral oils, Synthetic fluids
  HFB and HFC according to ISO 2943
- Degree of protection: IP65 according to EN 60529

Electrical data
- Electrical connection: EN 175301-803
- Resistive load: 5 A / 14 Vdc
  4 A / 30 Vdc
  5 A / 125 Vac
  4 A / 250 Vac
- CE certification
- Available Atex product: II 1GD Ex ia IIC Tx Ex ia IIIC Tx °C X

VEA50 UL

Electrical Vacuum Indicator
Connection: EN 175301-803

R	Ordering code
EN 10226 - R1/4”	VE A 21 A A 50 P01 UL

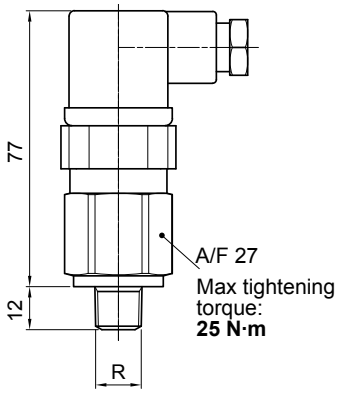

Hydraulic symbol

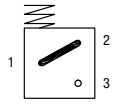

Electrical symbol

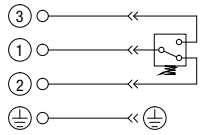

- Certification: UL
- Certification included in EX version

Materials
- Body: Brass
- Base: Black polyamide
- Contacts: Silver
- Seal: VEA: NBR/FPM
  VEB: NBR

Technical data
- Vacuum setting: 0.21 bar ±10%
- Max working pressure: 10 bar
- Proof pressure: 15 bar
- Working temperature: From -25 °C to +80 °C
- Compatibility with fluids: Mineral oils, Synthetic fluids
  HFB and HFC according to ISO 2943
- Degree of protection: IP65 according to EN 60529

Electrical data
- Electrical connection: EN 175301-803
- Resistive load: 5 A / 14 Vdc
  4 A / 30 Vdc
  5 A / 125 Vac
  4 A / 250 Vac
- CE certification
- Available Atex product: II 1GD Ex ia IIC Tx Ex ia IIIC Tx °C X

VL*51 - VL*52 - VL*53

Electrical/Visual Vacuum Indicator
Connection: EN 175301-803

51: Transparent base with lamps 24 Vdc
52: Transparent base with lamps 110 Vdc
53: Transparent base with lamps 230 Vac

R	Ordering code
EN 10226 - R1/4”	VL A 21 x A xx P01
EN 10226 - R1/8”	VL B 21 A A xx P01

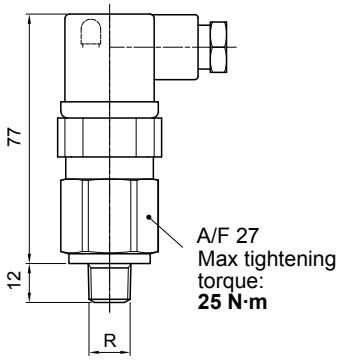

Hydraulic symbol

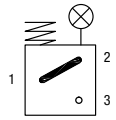

Electrical symbol

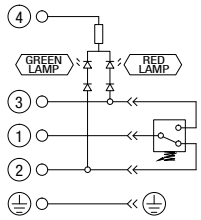

Materials
- Body: Brass
- Base: Transparent polyamide
- Contacts: Brass - Polyamide
- Seal: VLA: NBR/FPM
  VLB: NBR

Technical data
- Vacuum setting: 0.21 bar ±10%
- Max working pressure: 10 bar
- Proof pressure: 15 bar
- Working temperature: From -25 °C to +80 °C
- Compatibility with fluids: Mineral oils, Synthetic fluids
  HFB and HFC according to ISO 2943
- Degree of protection: IP65 according to EN 60529

Electrical data
- Electrical connection: EN 175301-803

- Type	51	52	53
- Lamps	24 Vdc	110 Vdc	230 Vac
- Resistive load:	1 A / 24 Vdc	1 A / 110 Vdc	1 A / 230 Vac

VL*71

Electrical/Visual Vacuum Indicator
Connection IEC 61076-2-101 D (M12), black base with lamps 24 Vdc

Connections	Indicator code
EN 10226 - R1/4”	VL A 21 x A 71 P01
EN 10226 - R1/8”	VL B 21 A A 71 P01

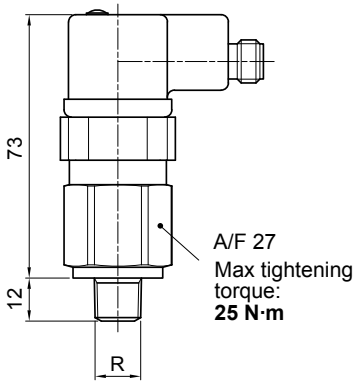

Hydraulic symbol

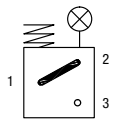

Electrical symbol

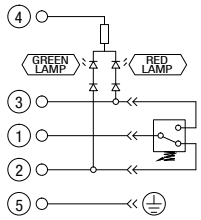

Materials
- Body: Brass
- Base: Black polyamide
- Contacts: Silver
- Seal: VLA: NBR/FPM
  VLB: NBR

Technical data
- Vacuum setting: 0.21 bar ±10%
- Max working pressure: 10 bar
- Proof pressure: 15 bar
- Working temperature: From -25 °C to +80 °C
- Compatibility with fluids: Mineral oils, Synthetic fluids
  HFB and HFC according to ISO 2943
- Degree of protection: IP65 according to EN 60529

Electrical data
- Electrical connection: IEC 61076-2-101 D (M12)
- Lamps 24 Vdc (black base)
- Resistive load: 0.4 A / 24 Vdc

VVA - VVB

Axial Vacuum Gauge

R	Ordering code
EN 10226 - R1/4”	VVA 20 P01
EN 10226 - R1/8”	VVB 20 P01

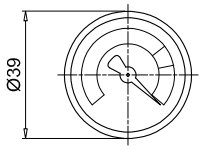

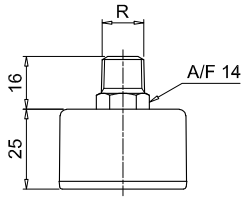

Hydraulic symbol

Dial scale

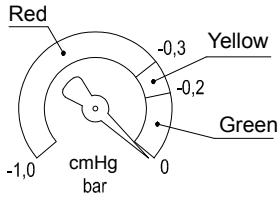

Conversion to SI units

[cmHg]	[bar]
-12	-0.16
-18	-0.24
-76	-1.01

Materials
- Case: Black plastic
- Window: Clear plastic
- Dial: White plastic
- Pointer: Black plastic
- Pressure connection: Cu-alloy
- Pressure element: Bourdon tube Cu-alloy soft soldered, C type
- Movement: Cu-alloy

Technical data
- Max working pressure: Steady: -0.7 bar
  Fluctuating: -0.6 bar
  Short time: -1.0 bar
- Working temperature: Ambienti from -40 °C to +60 °C
  Fluid max + 60 °C
  Storage from -40 °C to +60 °C
- Compatibility with fluids: Mineral oils, Synthetic fluids
  HFB and HFC according to ISO 2943
- Accuracy: Class 2.5 according to EN 13190
- Degree of protection: IP31 according to EN 60529

VVR - VVS

Radial Vacuum Gauge

R	A/F	Ordering code
EN 10226 - R1/4”	14	VVR 20 P01
EN 10226 - R1/8”	11	VVS 20 P01

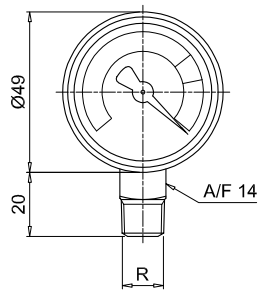

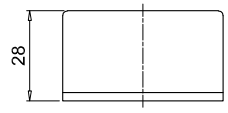

Hydraulic symbol

Dial scale

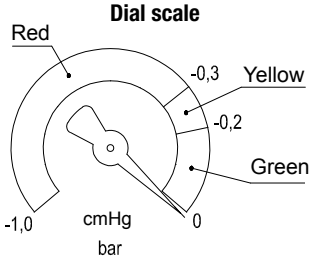

Conversion to SI units

[cmHg]	[bar]
-12	-0.16
-18	-0.24
-76	-1.01

Materials
- Case: Black plastic
- Window: Clear plastic
- Dial: White plastic
- Pointer: Black plastic
- Pressure connection: Cu-alloy
- Pressure element: Bourdon tube Cu-alloy soft soldered, C type
- Movement: Cu-alloy

Technical data
- Max working pressure: Steady: -0.7 bar
  Fluctuating: -0.6 bar
  Short time: -1.0 bar
- Working temperature: Ambienti from -40 °C to +60 °C
  Fluid max + 60 °C
  Storage from -40 °C to +60 °C
- Compatibility with fluids: Mineral oils, Synthetic fluids
  HFB and HFC according to ISO 2943
- Accuracy: Class 2.5 according to EN 13190
- Degree of protection: IP31 according to EN 60529

Dimensions

BEA*50 (EX)

Electrical Pressure Indicator
Connection EN 175301-803

Settings	Ordering code
1.5 bar ±10%	BE A 15 H A 50 P01
	BE A 15 H A 50 P01 EX
2.0 bar ±10%	BE A 20 H A 50 P01
	BE A 20 H A 50 P01 EX

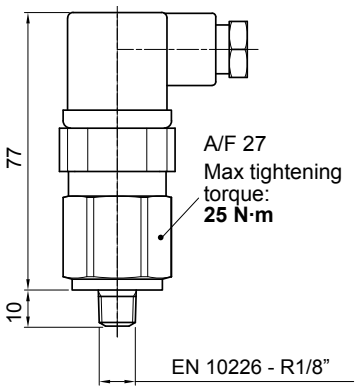

Hydraulic symbol

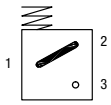

Electrical symbol

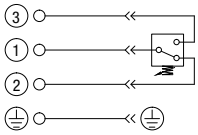

- Certification: ATEX, IECEx
- Certification included in EX version

Materials
- Body: Brass
- Base: Black polyamide
- Contacts: Silver
- Seal: HNBR

Technical data
- Max working pressure: 40 bar
- Proof pressure: 60 bar
- Working temperature: From -25 °C to +80 °C
- Compatibility with fluids: Mineral oils, Synthetic fluids HFB and HFC according to ISO 2943
- Degree of protection: IP65 according to EN 60529

Electrical data
- Electrical connection: EN 175301-803
- Resistive load: 5 A / 14 Vdc; 4 A / 30 Vdc; 5 A / 125 Vac; 4 A / 250 Vac
- CE certification
- Available Atex product: I M1 Ex ia I Ma; II 1GD Ex ia IIC Tx Ex ia IIIC Tx °C X

BEA*50 UL

Electrical Pressure Indicator
Connection EN 175301-803

Settings	Ordering code
1.5 bar ±10%	BE A 15 H A 50 P01 UL
2.0 bar ±10%	BE A 20 H A 50 P01 UL

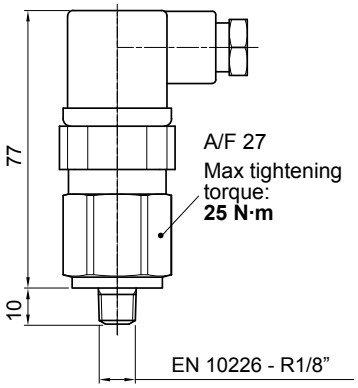

Hydraulic symbol

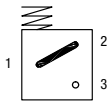

Electrical symbol

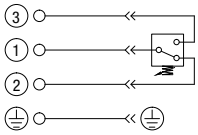

- Certification: UL
- Certification included in EX version

Materials
- Body: Brass
- Base: Black polyamide
- Contacts: Silver
- Seal: HNBR

Technical data
- Max working pressure: 40 bar
- Proof pressure: 60 bar
- Working temperature: From -25 °C to +80 °C
- Compatibility with fluids: Mineral oils, Synthetic fluids HFB and HFC according to ISO 2943
- Degree of protection: IP65 according to EN 60529

Electrical data
- Electrical connection: EN 175301-803
- Resistive load: 5 A / 14 Vdc; 4 A / 30 Vdc; 5 A / 125 Vac; 4 A / 250 Vac
- CE certification
- Available Atex product: I M1 Ex ia I Ma; II 1GD Ex ia IIC Tx Ex ia IIIC Tx °C X

BEM*41

Electrical Pressure Indicator
Connection via four-core cable

Settings	Ordering code
1.5 bar ±10%	BE M 15 H A 41 P01
2.0 bar ±10%	BE M 20 H A 41 P01

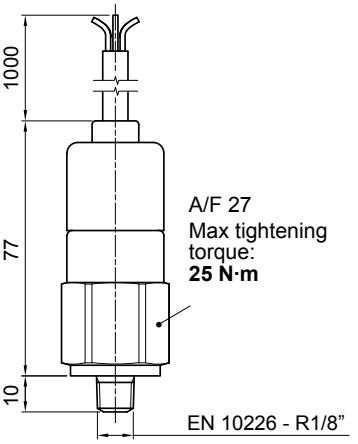

Hydraulic symbol

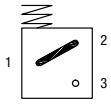

Electrical symbol

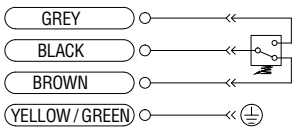

Materials
- Body: Brass
- Base: Black polyamide
- Contacts: Silver
- Seal: HNBR

Technical data
- Max working pressure: 40 bar
- Proof pressure: 60 bar
- Working temperature: From -25 °C to +80 °C
- Compatibility with fluids: Mineral oils, Synthetic fluids HFB and HFC according to ISO 2943
- Degree of protection: IP67 according to EN 60529

Electrical data
- Electrical connection: Four-core cable
- Resistive load: 5 A / 14 Vdc; 4 A / 30 Vdc; 5 A / 125 Vac; 4 A / 250 Vac
- CE certification

On request this indicator can be provided with main connectors in use for wirings.

BET*F10

Electrical Pressure Indicator
Connection AMP Superseal series 1.5

Settings	Ordering code
2.0 bar ±10%	BE T 20 H F 10 P01
2.5 bar ±10%	BE T 25 H F 10 P01

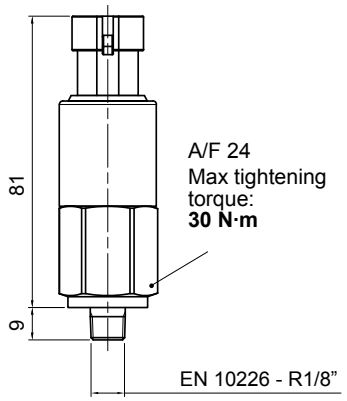

Hydraulic symbol

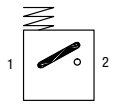

Electrical symbol

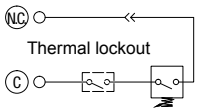

Materials
- Body: Brass
- Base: Black polyamide
- Contacts: Silver
- Seal: HNBR

Technical data
- Max working pressure: 10 bar
- Proof pressure: 15 bar
- Working temperature: From -25 °C to +100 °C
- Compatibility with fluids: Mineral oils, Synthetic fluids HFB and HFC according to ISO 2943
- Degree of protection: IP65 according to EN 60529

Electrical data
- Electrical connection: AMP Superseal series 1.5
- Resistive load: 0.5 A / 48 Vdc
- Thermostat condition: Open up to 30 °C
- CE certification

BET*F30

Electrical Pressure Indicator
Deutsch DT-04-2-P

Settings	Ordering code
2.0 bar ±10%	BE T 20 H F 30 P01
2.5 bar ±10%	BE T 25 H F 30 P01

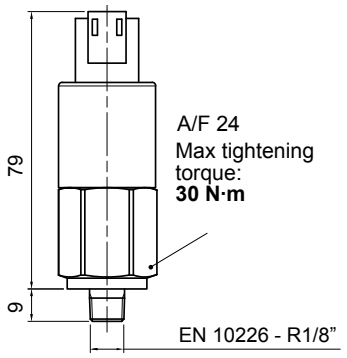

Hydraulic symbol

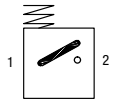

Electrical symbol

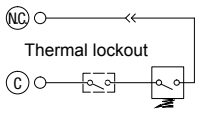

Materials
- Body: Brass
- Base: Black polyamide
- Contacts: Silver
- Seal: HNBR

Technical data
- Max working pressure: 10 bar
- Proof pressure: 15 bar
- Working temperature: From -25 °C to +100 °C
- Compatibility with fluids: Mineral oils, Synthetic fluids HFB and HFC according to ISO 2943
- Degree of protection: IP65 according to EN 60529

Electrical data
- Electrical connection: Deutsch DT-04-2-P
- Resistive load: 0.5 A / 48 Vdc
- Thermostat condition: Open up to 30 °C
- CE certification

BET*F50

Electrical Pressure Indicator
Connection EN 175301-803

Settings	Ordering code
2.0 bar ±10%	BE T 20 H F 50 P01
2.5 bar ±10%	BE T 25 H F 50 P01

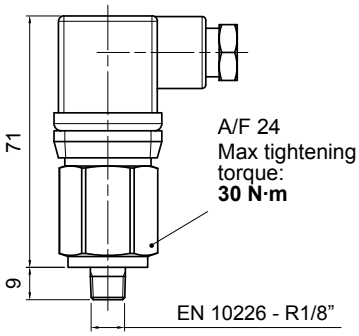

Hydraulic symbol

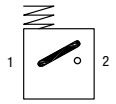

Electrical symbol

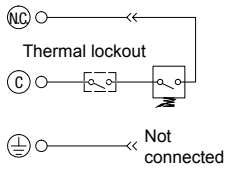

Materials
- Body: Brass
- Base: Black polyamide
- Contacts: Silver
- Seal: HNBR

Technical data
- Max working pressure: 10 bar
- Proof pressure: 15 bar
- Working temperature: From -25 °C to +100 °C
- Compatibility with fluids: Mineral oils, Synthetic fluids HFB and HFC according to ISO 2943
- Degree of protection: IP65 according to EN 60529

Electrical data
- Electrical connection: EN 175301-803
- Resistive load: 0.5 A / 48 Vdc
- Thermostat condition: Open up to 30 °C
- CE certification

Dimensions

BL*51 - BL*52 - BL*53

Electrical/Visual Pressure Indicator
Connection: EN 175301-803

51: Transparent base with lamps 24 Vdc
52: Transparent base with lamps 110 Vdc
53: Transparent base with lamps 230 Vac

Settings	Ordering code
1.5 bar ±10%	BL A 15 H A xx P01
2.0 bar ±10%	BL A 20 H A xx P01

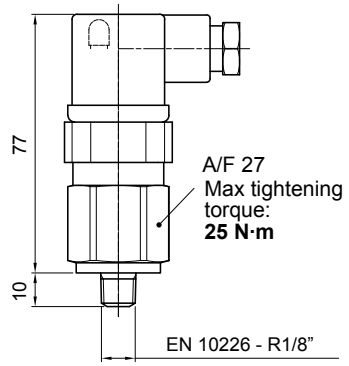

Hydraulic symbol

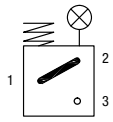

Electrical symbol

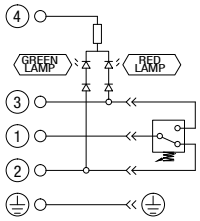

Materials
- Body: Brass
- Base: Transparent polyamide
- Contacts: Silver
- Seal: HNBR

Technical data
- Max working pressure: 40 bar
- Proof pressure: 60 bar
- Working temperature: From -25 °C to +80 °C
- Compatibility with fluids: Mineral oils, Synthetic fluids HFB and HFC according to ISO 2943
- Degree of protection: IP65 according to EN 60529

Electrical data

- Electrical connection:	EN 175301-803		
- Type	51	52	53
- Lamps	24 Vdc	110 Vdc	230 Vac
- Resistive load:	1 A / 24 Vdc	1 A / 110 Vdc	1 A / 230 Vac

BL*71

Electrical/Visual Pressure Indicator
Connection IEC 61076-2-101 D (M12), black base with lamps 24 Vdc

Settings	Ordering code
1.5 bar ±10%	BL A 15 H A 71 P01
2.0 bar ±10%	BL A 20 H A 71 P01

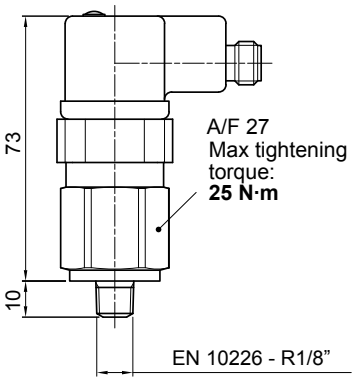

Hydraulic symbol

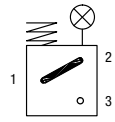

Electrical symbol

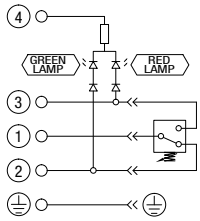

Materials
- Body: Brass
- Base: Black polyamide
- Contacts: Silver
- Seal: HNBR

Technical data
- Max working pressure: 40 bar
- Proof pressure: 60 bar
- Working temperature: From -25 °C to +80 °C
- Compatibility with fluids: Mineral oils, Synthetic fluids HFB and HFC according to ISO 2943
- Degree of protection: IP65 according to EN 60529

Electrical data
- Electrical connection: IEC 61076-2-101 D (M12)
- Lamps: 24 Vdc (black base)
- Resistive load: 0.4 A / 24 Vdc

BVA

Axial Pressure Gauge

Settings	Ordering code
1.4 bar ±10%	BV A 14 P01
2.5 bar ±10%	BV A 25 P01

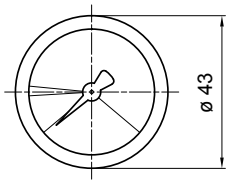

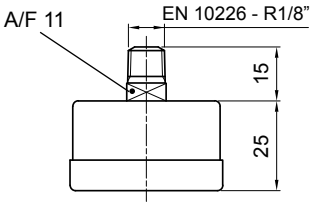

Hydraulic symbol

Dial scale

BV A 14 P01

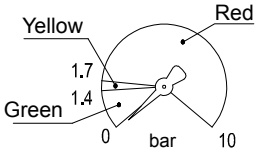

BV A 25 P01

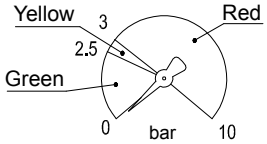

Materials
- Case: Painted Steel
- Window: Clear plastic
- Dial: Painted Steel
- Pointer: Black plastic
- Pressure connection: Brass
- Pressure element: Bourdon tube Cu-alloy sof t soldered, C type

Technical data
- Max working pressure: Static: 7 bar
  Fluctuating: 6 bar
  Short time: 10 bar
- Working temperature: Ambient from -40 °C to +60 °C
  Fluid max +60 °C
- Compatibility with fluids: Mineral oils, Synthetic fluids HFB and HFC according to ISO 2943
- Accuracy: Class 2.5 according to EN 13190
- Degree of protection: IP31 according to EN 60529

BVR

Radial Pressure Gauge

Settings	Ordering code
1.4 bar ±10%	BV R 14 P01
2.5 bar ±10%	BV R 25 P01

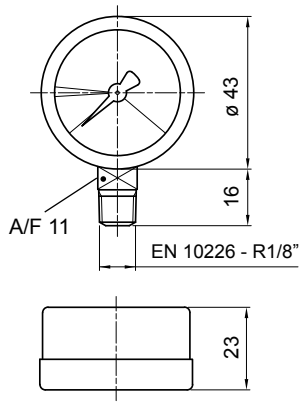

Hydraulic symbol

Dial scale

BV R 14 P01

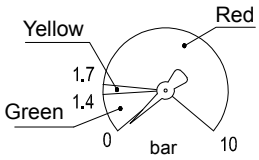

BV R 25 P01

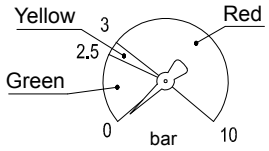

Materials

- Case: Painted Steel
- Window: Clear plastic
- Dial: Painted Steel
- Pointer: Black plastic
- Pressure connection: Brass
- Pressure element: Bourdon tube Cu-alloy sof t soldered, C type

Technical data

- Max working pressure: Static: 7 bar
  Fluctuating: 6 bar
  Short time: 10 bar
- Working temperature: Ambient from -40 °C to +60 °C
  Fluid max +60 °C
- Compatibility with fluids: Mineral oils, Synthetic fluids
  HFB and HFC according to ISO 2943
- Accuracy: Class 2.5 according to EN 13190
- Degree of protection: IP31 according to EN 60529

BVP - BVQ

Visual Pressure Indicator
BVP - Automatic reset
BVQ - Manual reset

Setting	Ordering code
1.5 bar ±10%	BV P 15 H P01
	BV Q 15 H P01
2.0 bar ±10%	BV P 20 H P01
	BV Q 20 H P01

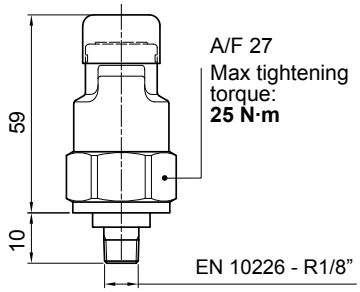

Hydraulic symbol

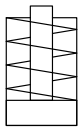

Materials

- Body: Brass
- Cover / internal parts: Nylon
- Caps: VMQ
- Seal: HNBR

Technical data

- Reset: BVP - Automatic reset
  BVQ - Manual reset
- Max working pressure: 10 bar
- Proof pressure: 15 bar
- Working temperature: From -25 °C to +80 °C
- Compatibility with fluids: Mineral oils, Synthetic fluids
  HFB and HFC according to ISO 2943
- Degree of protection: IP45 according to EN 60529

Signals

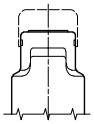

Absence of pressure
(no indicator)

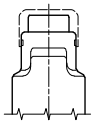

Presence of pressure
(green button rises gradually)

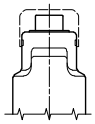

Clogged filter element
(red button risen)

Dimensions

DEA*50

Electrical Differential Pressure Indicator
Connection: EN 175301-803

Settings	Ordering code
1.2 bar ±10%	DE A 12 x A 50 P01
2.0 bar ±10%	DE A 20 x A 50 P01
5.0 bar ±10%	DE A 50 x A 50 P01
7.0 bar ±10%	DE A 70 x A 50 P01
9.5 bar ±10%	DE A 95 x A 50 P01

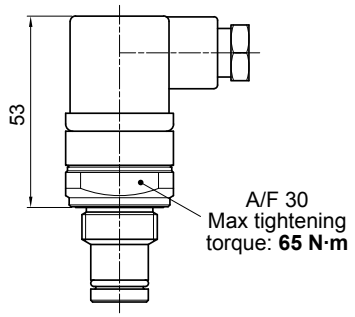

Hydraulic symbol

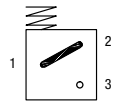

Electrical symbol

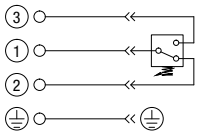

Materials
- Body: Brass
- Base: Black polyamide
- Contacts: Silver
- Seal: HNBR - FPM

Technical data
- Max working pressure: 420 bar
- Proof pressure: 630 bar
- Burst pressure: 1260 bar
- Working temperature: From -25 °C to +110 °C
- Compatibility with fluids: Mineral oils, Synthetic fluids HFB and HFC according to ISO 2943
- Degree protection: IP66 according to EN 60529 IP69K according to ISO 20653

Electrical data
- Electrical connection: EN 175301-803
- Resistive load: 0.2 A / 115 Vdc

DEH*48

Hazardous Area
Electrical Differential Pressure Indicator
Connection via three-core cable - fitting M20x1.5

Settings	Ordering code
2.0 bar ±10%	DE H 20 x A 48 P01
5.0 bar ±10%	DE H 50 x A 48 P01
7.0 bar ±10%	DE H 70 x A 48 P01

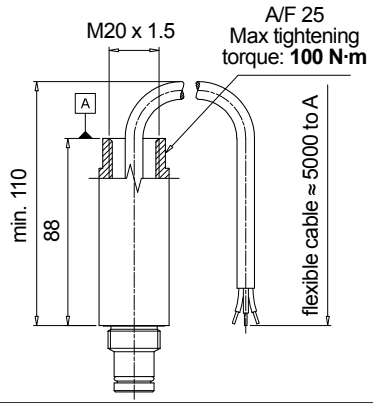

Hydraulic symbol

Electrical symbol

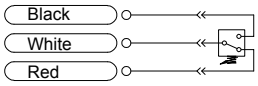

- Certification / Approvals: ATEX, IECEx, EAC TR CU, INMETRO
- Certification included as standard

Materials
- Body: AISI 316L
- Contacts: Rhodium
- Seal: FPM - MFQ

Technical data
- Max working pressure: 420 bar
- Proof pressure: 630 bar
- Burst pressure: 1260 bar
- Working temperature: From -60 °C to +125 °C
- Compatibility with fluids: Mineral oils, Synthetic fluids HFB and HFC according to ISO 2943
- Temperature class: T4 (135 °C) and T6 (85 °C)
- Degree of protection: IP 66/67/68 according to EN 60529
- Connection type:Three-core cable, fitting M20x1.5
- Contact type: SPCO/SPDT (Hermetically sealed - Volt-free contacts)

Electrical data
- Connection via three-core cable - fitting M20x1.5
- Resistive Load: 830 mA / 24 Vdc - 180 mA / 110 Vac
- Electrical Ratings: Ui = 30 Vdc / Ii = 250 mA / Pi = 1.3 W
- Available ATEX product: II 1 GD Ex ia IIC T6 Ga -60°C ≤ Ta ≤ 80°C
  Ex ia IIC T4 Ga -60°C ≤ Ta ≤ 125°C
  II 2 GD Ex db IIC T6* Gb Ex tb IIIC T85°C* Db
  (Tamb : = -60°C to +70°C)* IP66/67
  * alternative T/Class and ambients T4, T135°C
  (Tamb = -60°C to +120°C)

DEH*49

Hazardous Area
Electrical Differential Pressure Indicator
Connection via four-core cable - fitting 1/2" NPT

Settings	Ordering code
2.0 bar ±10%	DE H 20 x A 49 P01
5.0 bar ±10%	DE H 50 x A 49 P01
7.0 bar ±10%	DE H 70 x A 49 P01

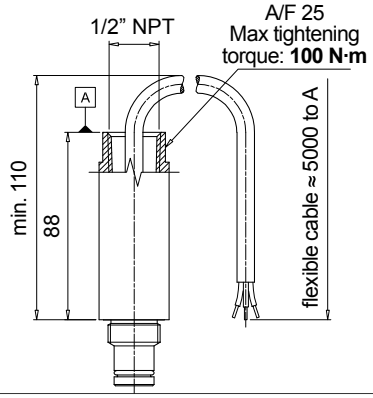

Hydraulic symbol

Electrical symbol

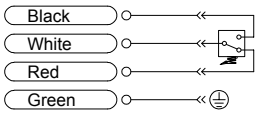

- Certification / Approvals: ATEX, IECEx, EAC TR CU, INMETRO, UL/CSA Class I Division 1 Groups A-D, UL/CSA Class II Division 1 Groups E-G
- Certification included as standard

Materials
- Body: AISI 316L
- Contacts: Rhodium
- Seal: FPM - MFQ

Technical data
- Max working pressure: 420 bar
- Proof pressure: 630 bar
- Burst pressure: 1260 bar
- Working temperature: From -60 °C to +120 °C : ATEX, IECEx, EAC TR CU, INMETRO
  From -60 °C to +105 °C : UL/CSA
- Compatibility with fluids: Mineral oils, Synthetic fluids HFB and HFC according to ISO 2943
- Temperature class: T4 (135 °C) and T6 (85 °C)
- Degree of protection: IP 66/67/68 according to EN 60529
- Connection type:Four-core cable, fitting 1/2" NPT
- Contact type: SPCO/SPDT (Hermetically sealed - Volt-free contacts)

Electrical data
- Connection via four-core cable - fitting 1/2" NPT
- Resistive Load: 830 mA / 24 Vdc - 180 mA / 110 Vac
- Max voltage 150 Vac/dc
- Power 20 W
- Available ATEX product: II 1 GD Ex ia IIC T6 Ga -60°C ≤ Ta ≤ 80°C
  Ex ia IIC T4 Ga -60°C ≤ Ta ≤ 125°C
  II 2 GD Ex db IIC T6* Gb Ex tb IIIC T85°C* Db
  (Tamb : = -60°C to +70°C)* IP66/67
  * alternative T/Class and ambients T4, T135°C
  (Tamb = -60°C to +120°C)

DEH*70

Hazardous Area
Electrical Differential Pressure Indicator
Connection IEC 61076-2-101 D (M12)

Settings	Ordering code
2.0 bar ±10%	DE H 20 x A 70 P01
5.0 bar ±10%	DE H 50 x A 70 P01
7.0 bar ±10%	DE H 70 x A 70 P01

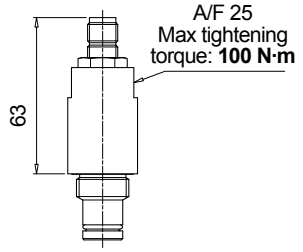

Hydraulic symbol

Electrical symbol

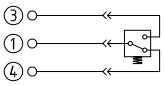

- Certification / Approvals:
ATEX, IECEx, EAC TR CU, INMETRO
- Certification included as standard

Materials
- Body: AISI 316L with internal engineered resin switch
- Contacts: Rhodium
- Seal: FPM - MFQ

Technical data
- Max working pressure: 420 bar
- Proof pressure: 630 bar
- Burst pressure: 1260 bar
- Working temperature: From -60 °C to +80 °C
- Compatibility with fluids: Mineral oils, Synthetic fluids HFB and HFC according to ISO 2943
- Temperature class: T6 (85 °C)
- Degree of protection: IP 66/67 according to EN 60529
- Connection type:IEC 61076-2-101 D (M12)
- Contact type: SPCO/SPDT (Hermetically sealed - Volt-free contacts)

Electrical data
- Connection IEC 61076-2-101 D (M12)
- Resistive Load: 830 mA / 24 Vdc - 180 mA / 110 Vdc
- Electrical Ratings: Ui = 30 Vdc
Ii = 250 mA
Pi = 1.3 W
- Available ATEX product: II 1 GD Ex ia IIC T6 Ga -60°C ≤ Ta ≤ 80°C
Ex ia IIC T4 Ga -60°C ≤ Ta ≤ 125°C
II 2 GD Ex db IIC T6* Gb Ex tb IIIC T85°C* Db
(Tamb : = -60°C to +70°C)* IP66/67
* alternative T/Class and ambients T4, T135°C
(Tamb = -60°C to +120°C)

DEM*F10

Electrical Differential Pressure Indicator
Connection: AMP Superseal series 1.5

Settings	Ordering code
1.2 bar ±10%	DE M 12 x F 10 P01
2.0 bar ±10%	DE M 20 x F 10 P01
5.0 bar ±10%	DE M 50 x F 10 P01
7.0 bar ±10%	DE M 70 x F 10 P01
9.5 bar ±10%	DE M 95 x F 10 P01

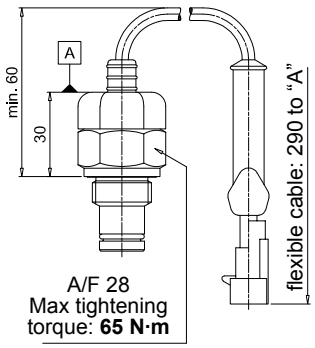

Hydraulic symbol

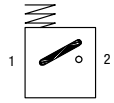

Electrical symbol

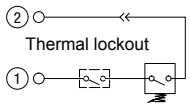

Materials
- Body: Brass
- Base: Black polyamide
- Contacts: Silver
- Seal: HNBR - FPM

Technical data
- Max working pressure: 420 bar
- Proof pressure: 630 bar
- Burst pressure: 1260 bar
- Working temperature: From -25 °C to +110 °C
- Compatibility with fluids: Mineral oils, Synthetic fluids HFB and HFC according to ISO 2943
- Degree protection: IP66 according to EN 60529

Electrical data
- Electrical connection: AMP Superseal series 1.5
- Resistive load: 0.2 A / 115 Vdc
- Switching type: Normally open contacts (NC on request)
- Thermal lockout: Normally open up to 30 °C (option "F")

DEM*F20

Electrical Differential Pressure Indicator
AMP Time junior

Settings	Ordering code
1.2 bar ±10%	DE M 12 x F 20 P01
2.0 bar ±10%	DE M 20 x F 20 P01
5.0 bar ±10%	DE M 50 x F 20 P01
7.0 bar ±10%	DE M 70 x F 20 P01
9.5 bar ±10%	DE M 95 x F 20 P01

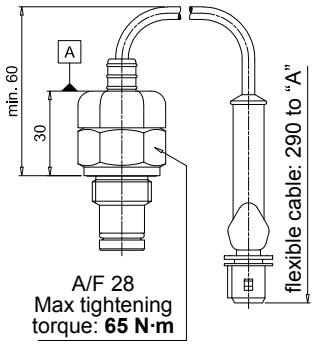

Hydraulic symbol

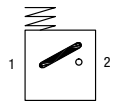

Electrical symbol

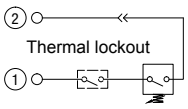

Materials
- Body: Brass
- Base: Black polyamide
- Contacts: Silver
- Seal: HNBR - FPM

Technical data
- Max working pressure: 420 bar
- Proof pressure: 630 bar
- Burst pressure: 1260 bar
- Working temperature: From -25 °C to +110 °C
- Compatibility with fluids: Mineral oils, Synthetic fluids HFB and HFC according to ISO 2943
- Degree protection: IP66 according to EN 60529

Electrical data
- Electrical connection: AMP Time junior
- Resistive load: 0.2 A / 115 Vdc
- Switching type: Normally open contacts (NC on request)
- Thermal lockout: Normally open up to 30 °C (option "F")

Dimensions

DEM*F30

Electrical Differential Pressure Indicator
Deutsch DT-04-2-P

Settings	Ordering code
1.2 bar ±10%	DE M 12 x F 30 P01
2.0 bar ±10%	DE M 20 x F 30 P01
5.0 bar ±10%	DE M 50 x F 30 P01
7.0 bar ±10%	DE M 70 x F 30 P01
9.5 bar ±10%	DE M 95 x F 30 P01

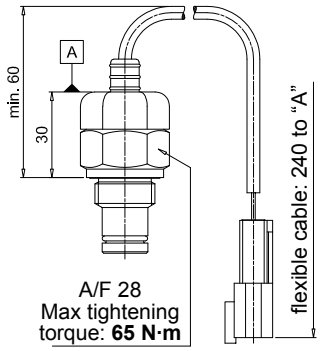

Hydraulic symbol

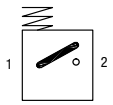

Electrical symbol

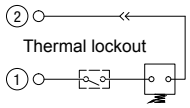

Materials
- Body: Brass
- Base: Black polyamide
- Contacts: Silver
- Seal: HNBR - FPM

Technical data
- Max working pressure: 420 bar
- Proof pressure: 630 bar
- Burst pressure: 1260 bar
- Working temperature: From -25 °C to +110 °C
- Compatibility with fluids: Mineral oils, Synthetic fluids HFB and HFC according to ISO 2943
- Degree protection: IP66 according to EN 60529

Electrical data
- Electrical connection: Deutsch DT-04-2-P
- Resistive load: 0.2 A / 115 Vdc
- Switching type: Normally open contacts (NC on request)
- Thermal lockout: Normally open up to 30 °C (option "F")

DEM*F35

Electrical Differential Pressure Indicator
Deutsch DT-04-3-P

Settings	Ordering code
1.2 bar ±10%	DE M 12 x F 35 P01
2.0 bar ±10%	DE M 20 x F 35 P01
5.0 bar ±10%	DE M 50 x F 35 P01
7.0 bar ±10%	DE M 70 x F 35 P01
9.5 bar ±10%	DE M 95 x F 35 P01

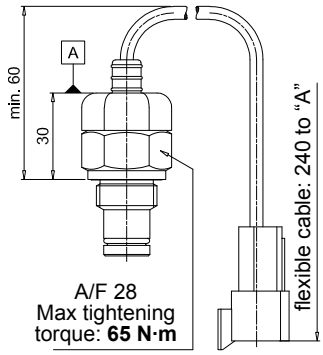

Hydraulic symbol

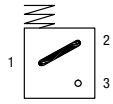

Electrical symbol

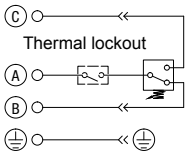

Materials
- Body: Brass
- Base: Black polyamide
- Contacts: Silver
- Seal: HNBR - FPM

Technical data
- Max working pressure: 420 bar
- Proof pressure: 630 bar
- Burst pressure: 1260 bar
- Working temperature: From -25 °C to +110 °C
- Compatibility with fluids: Mineral oils, Synthetic fluids HFB and HFC according to ISO 2943
- Degree protection: IP66 according to EN 60529

Electrical data
- Electrical connection: Deutsch DT-04-3-P
- Resistive load: 0.2 A / 115 Vdc
- Switching type: SPDT contact
- Thermal lockout: Normally open up to 30 °C (option "F")

DEM*A10

Electrical Differential Pressure Indicator
Connection: AMP Superseal series 1.5

Settings	Ordering code
1.2 bar ±10%	DE M 12 x A 10 P01
2.0 bar ±10%	DE M 20 x A 10 P01
5.0 bar ±10%	DE M 50 x A 10 P01
7.0 bar ±10%	DE M 70 x A 10 P01
9.5 bar ±10%	DE M 95 x A 10 P01

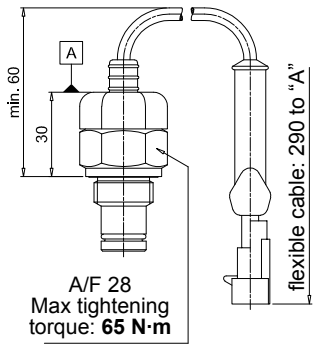

Hydraulic symbol

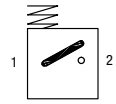

Electrical symbol

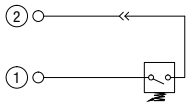

Materials
- Body: Brass
- Base: Black polyamide
- Contacts: Silver
- Seal: HNBR - FPM

Technical data
- Max working pressure: 420 bar
- Proof pressure: 630 bar
- Burst pressure: 1260 bar
- Working temperature: From -25 °C to +110 °C
- Compatibility with fluids: Mineral oils, Synthetic fluids HFB and HFC according to ISO 2943
- Degree protection: IP66 according to EN 60529

Electrical data
- Electrical connection: AMP Superseal series 1.5
- Resistive load: 0.2 A / 115 Vdc
- Switching type: Normally open contacts (NC on request)

DEM*A20

Electrical Differential Pressure Indicator
AMP Time junior

Settings	Ordering code
1.2 bar ±10%	DE M 12 x A 20 P01
2.0 bar ±10%	DE M 20 x A 20 P01
5.0 bar ±10%	DE M 50 x A 20 P01
7.0 bar ±10%	DE M 70 x A 20 P01
9.5 bar ±10%	DE M 95 x A 20 P01

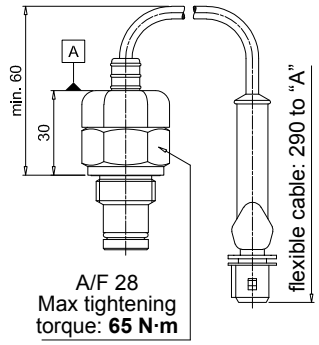

Hydraulic symbol

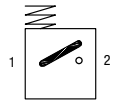

Electrical symbol

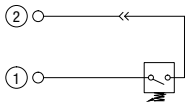

Materials
- Body: Brass
- Base: Black polyamide
- Contacts: Silver
- Seal: HNBR - FPM

Technical data
- Max working pressure: 420 bar
- Proof pressure: 630 bar
- Burst pressure: 1260 bar
- Working temperature: From -25 °C to +110 °C
- Compatibility with fluids: Mineral oils, Synthetic fluids HFB and HFC according to ISO 2943
- Degree protection: IP66 according to EN 60529

Electrical data
- Electrical connection: AMP Time junior
- Resistive load: 0.2 A / 115 Vdc
- Switching type: Normally open contacts (NC on request)

DEM*A30

Electrical Differential Pressure Indicator
Deutsch DT-04-2-P

Settings	Ordering code
1.2 bar ±10%	DE M 12 x A 30 P01
2.0 bar ±10%	DE M 20 x A 30 P01
5.0 bar ±10%	DE M 50 x A 30 P01
7.0 bar ±10%	DE M 70 x A 30 P01
9.5 bar ±10%	DE M 95 x A 30 P01

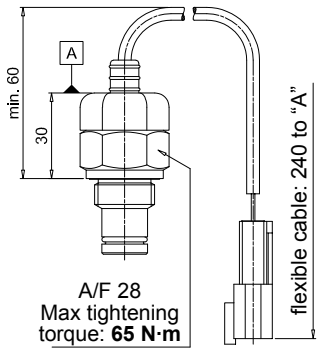

Hydraulic symbol

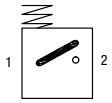

Electrical symbol

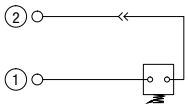

Materials
- Body: Brass
- Base: Black polyamide
- Contacts: Silver
- Seal: HNBR - FPM

Technical data
- Max working pressure: 420 bar
- Proof pressure: 630 bar
- Burst pressure: 1260 bar
- Working temperature: From -25 °C to +110 °C
- Compatibility with fluids: Mineral oils, Synthetic fluids HFB and HFC according to ISO 2943
- Degree protection: IP66 according to EN 60529

Electrical data
- Electrical connection: Deutsch DT-04-2-P
- Resistive load: 0.2 A / 115 Vdc
- Switching type: Normally open contacts (NC on request)

DEM*A35

Electrical Differential Pressure Indicator
Deutsch DT-04-3-P

Settings	Ordering code
1.2 bar ±10%	DE M 12 x A 35 P01
2.0 bar ±10%	DE M 20 x A 35 P01
5.0 bar ±10%	DE M 50 x A 35 P01
7.0 bar ±10%	DE M 70 x A 35 P01
9.5 bar ±10%	DE M 95 x A 35 P01

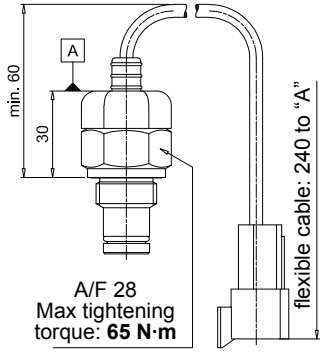

Hydraulic symbol

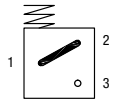

Electrical symbol

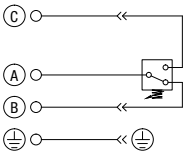

Materials
- Body: Brass
- Base: Black polyamide
- Contacts: Silver
- Seal: HNBR - FPM

Technical data
- Max working pressure: 420 bar
- Proof pressure: 630 bar
- Burst pressure: 1260 bar
- Working temperature: From -25 °C to +110 °C
- Compatibility with fluids: Mineral oils, Synthetic fluids HFB and HFC according to ISO 2943
- Degree protection: IP66 according to EN 60529

Electrical data
- Electrical connection: Deutsch DT-04-3-P
- Resistive load: 0.2 A / 115 Vdc
- Switching type: SPDT contact

Dimensions

DES*10

Electrical Differential Pressure Indicator
AMP Superseal series 1.5

Settings	Ordering code
1.2 bar ±10%	DE S 12 H A 10 P01
2.5 bar ±10%	DE S 25 H A 10 P01
4.0 bar ±10%	DE S 40 H A 10 P01

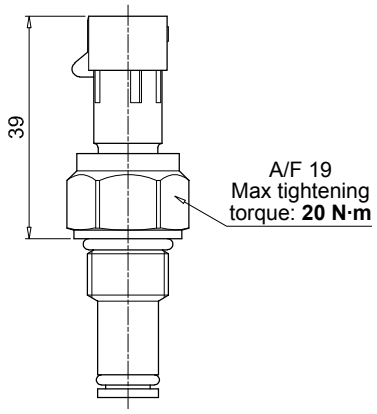

Hydraulic symbol

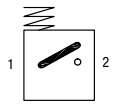

Electrical symbol

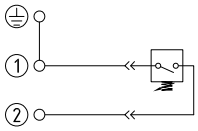

Materials
- Body: Brass
- Internal parts: Brass - Polyamide
- Contacts: Silver
- Seal: HNBR

Technical data
- Max working pressure: 16 bar
- Proof pressure: 24 bar
- Burst pressure: 48 bar
- Working temperature: From -25 °C to +110 °C
- Compatibility with fluids: Mineral oils, Synthetic fluids HFB and HFC according to ISO 2943
- Degree protection: IP67 according to EN 60529

Electrical data
- Electrical connection: AMP Superseal series 1.5
- Resistive load: 0.2 A / 24 Vdc
- Switching type: Normally open contacts (NC on request)

DES*30

Electrical Differential Pressure Indicator
Deutsch DT-04-2-P

Settings	Ordering code
1.2 bar ±10%	DE S 12 H A 30 P01
2.5 bar ±10%	DE S 25 H A 30 P01
4.0 bar ±10%	DE S 40 H A 30 P01

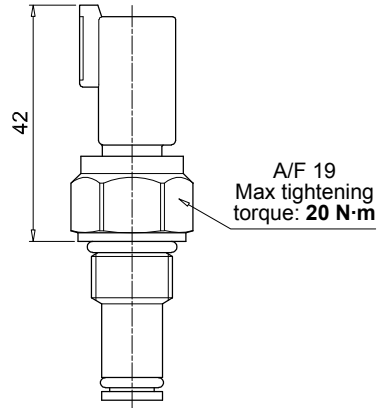

Hydraulic symbol

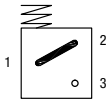

Electrical symbol

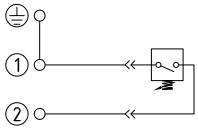

Materials
- Body: Brass
- Internal parts: Brass - Polyamide
- Contacts: Silver
- Seal: HNBR

Technical data
- Max working pressure: 16 bar
- Proof pressure: 24 bar
- Burst pressure: 48 bar
- Working temperature: From -25 °C to +110 °C
- Compatibility with fluids: Mineral oils, Synthetic fluids HFB and HFC according to ISO 2943
- Degree protection: IP67 according to EN 60529

Electrical data
- Electrical connection: Deutsch DT-04-2-P
- Resistive load: 0.2 A / 24 Vdc
- Switching type: Normally open contacts (NC on request)

DES*80

Electrical Differential Pressure Indicator
Stud #10-32 UNF

Settings	Ordering code
1.2 bar ±10%	DE S 12 H A 80 P01
2.5 bar ±10%	DE S 25 H A 80 P01
4.0 bar ±10%	DE S 40 H A 80 P01

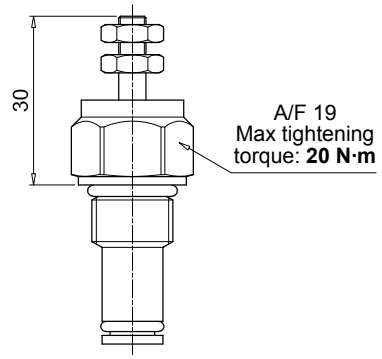

Hydraulic symbol

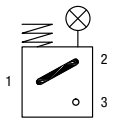

Electrical symbol

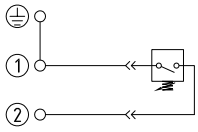

Materials
- Body: Brass
- Internal parts: Brass - Polyamide
- Contacts: Silver
- Seal: HNBR

Technical data
- Max working pressure: 16 bar
- Proof pressure: 24 bar
- Burst pressure: 48 bar
- Working temperature: From -25 °C to +110 °C
- Compatibility with fluids: Mineral oils, Synthetic fluids HFB and HFC according to ISO 2943
- Degree protection: IP67 according to EN 60529

Electrical data
- Electrical connection: Stud #10-32 UNF
- Resistive load: 0.2 A / 24 Vdc
- Switching type: Normally open contacts (NC on request)

DEU*50 UL

Electrical Differential Pressure Indicator
Connection EN 175301-803

Settings	Ordering code
2.0 bar ±10%	DE U 20 V A 50 P01 UL
5.0 bar ±10%	DE U 50 V A 50 P01 UL
7.0 bar ±10%	DE U 70 V A 50 P01 UL

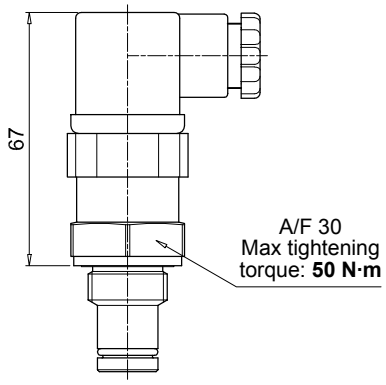

Hydraulic symbol

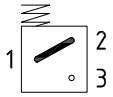

Electrical symbol

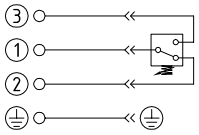

- Certification: UL
- Certification included as standard

Materials
- Body: Brass
- Base: Black Polyamide
- Contacts: Silver
- Seal: FPM

Technical data
- Max working pressure: 210 bar
- Proof pressure: 220 bar
- Burst pressure: 880 bar
- Working temperature: From --25 °C to +85 °C
- Compatibility with fluids: Mineral oils, Synthetic fluids HFB and HFC according to ISO 2943
- Degree protection: IP65 according to EN 60529

Electrical data
- Electrical connection: EN 175301-803
- Resistive load: 3 A / 30 Vdc
  3 A / 125 Vac
  3 (3) A / 250 Vac

DEX*50

Electrical Differential Pressure Indicator
Connection: EN 175301-803

Settings	Ordering code
1.2 bar ±10%	DE X 12 x A 50 P01
2.0 bar ±10%	DE X 20 x A 50 P01
5.0 bar ±10%	DE X 50 x A 50 P01
7.0 bar ±10%	DE X 70 x A 50 P01
9.5 bar ±10%	DE X 95 x A 50 P01

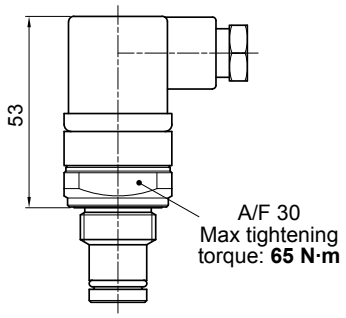

Hydraulic symbol

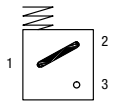

Electrical symbol

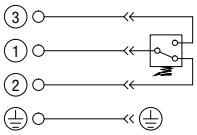

Materials
- Body: AISI 316L
- Base: Black polyamide
- Contacts: Silver
- Seal: HNBR - MFQ

Technical data
- Max working pressure: 420 bar
- Proof pressure: 630 bar
- Burst pressure: 1260 bar
- Working temperature: From -25 °C to +110 °C
- Compatibility with fluids: Mineral oils, Synthetic fluids HFB and HFC according to ISO 2943
- Degree protection: IP66 according to EN 60529 IP69K according to ISO 20653

Electrical data
- Electrical connection: EN 175301-803
- Resistive load: 0.2 A / 115 Vdc

DEZ*50

Electrical Differential Pressure Indicator
Connection: EN 175301-803

Settings	Ordering code
1.2 bar ±10%	DE Z 12 x A 50 P01
2.5 bar ±10%	DE Z 25 x A 50 P01
5.0 bar ±10%	DE Z 50 x A 50 P01
7.0 bar ±10%	DE Z 70 x A 50 P01
9.5 bar ±10%	DE Z 95 x A 50 P01

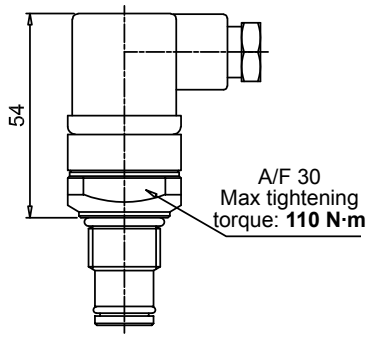

Hydraulic symbol

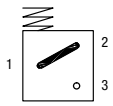

Electrical symbol

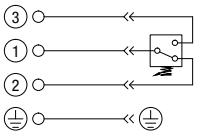

Materials
- Body: AISI 316L
- Base: Black polyamide
- Contacts: Silver
- Seal: HNBR - MFQ

Technical data
- Max working pressure: 700 bar
- Proof pressure: 1050 bar
- Burst pressure: 2100 bar
- Working temperature: From -25 °C to +110 °C
- Compatibility with fluids: Mineral oils, Synthetic fluids HFA, HFB, HFC according to ISO 2943
- Degree protection: IP66 according to EN 60529 IP69K according to ISO 20653

Electrical data
- Electrical connection: EN 175301-803
- Resistive load: 0.2 A / 115 Vdc

Dimensions

DLA*51 - DLA*52

Electrical/Visual Differential Pressure Indicator
Connection: EN 175301-803
51: Transparent base with lamps 24 Vdc
52: Transparent base with lamps 110 Vdc

Settings	Ordering code
1.2 bar ±10%	DL A 12 x A xx P01
2.0 bar ±10%	DL A 20 x A xx P01
5.0 bar ±10%	DL A 50 x A xx P01
7.0 bar ±10%	DL A 70 x A xx P01
9.5 bar ±10%	DL A 95 x A xx P01

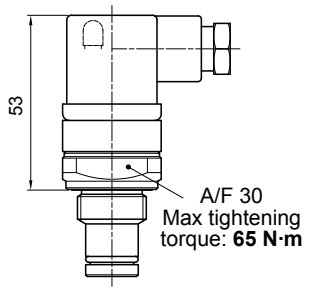

Hydraulic symbol

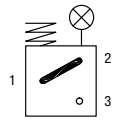

Electrical symbol

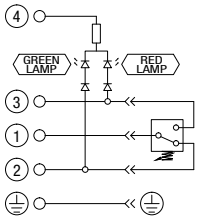

Materials
- Body: Brass
- Base: Transparent polyamide
- Contacts: Silver
- Seal: HNBR - FPM

Technical data
- Max working pressure: 420 bar
- Proof pressure: 630 bar
- Burst pressure: 1260 bar
- Working temperature: From -25 °C to +110 °C
- Compatibility with fluids: Mineral oils, Synthetic fluids HFB and HFC according to ISO 2943
- Degree protection: IP66 according to EN 60529 IP69K according to ISO 20653

Electrical data

- Electrical connection:	EN 175301-803	
- Type	51	52
- Lamps	24 Vdc	110 Vdc
- Resistive load:	1 A / 24 Vdc	1 A / 110 Vdc

DLA*71

Electrical/Visual Differential pressure indicator
Connection IEC 61076-2-101 D (M12),
black base with lamps 24 Vdc

Settings	Ordering code
1.2 bar ±10%	DL A 12 x A 71 P01
2.0 bar ±10%	DL A 20 x A 71 P01
5.0 bar ±10%	DL A 50 x A 71 P01
7.0 bar ±10%	DL A 70 x A 71 P01
9.5 bar ±10%	DL A 95 x A 71 P01

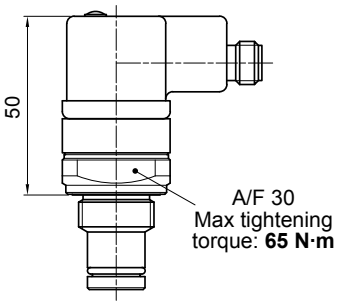

Hydraulic symbol

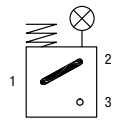

Electrical symbol

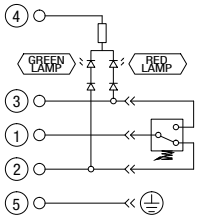

Materials
- Body: Brass
- Base: Black polyamide
- Contacts: Silver
- Seal: HNBR - FPM

Technical data
- Max working pressure: 420 bar
- Proof pressure: 630 bar
- Burst pressure: 1260 bar
- Working temperature: From -25 °C to +110 °C
- Compatibility with fluids: Mineral oils, Synthetic fluids HFB and HFC according to ISO 2943
- Degree protection: IP65 according to EN 60529 IP69K according to ISO 20653

Electrical data
- Electrical connection: IEC 61076-2-101 D (M12)
- Lamps 24 Vdc (black base)
- Resistive load: 0.4 A / 24 Vdc

DLE*A50

Electrical/Visual Differential Pressure Indicator
Without term. Connections: EN 175301-803

Settings	Ordering code
1.2 bar ±10%	DL E 12 x A 50 P01
2.0 bar ±10%	DL E 20 x A 50 P01
5.0 bar ±10%	DL E 50 x A 50 P01
7.0 bar ±10%	DL E 70 x A 50 P01
9.5 bar ±10%	DL E 95 x A 50 P01

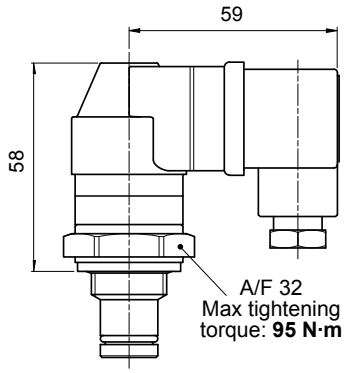

Hydraulic symbol

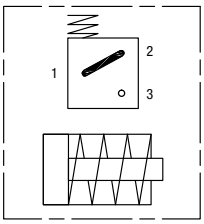

Electrical symbol

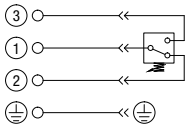

Materials
- Body: Brass
- Base: Black polyamide
- Contacts: Silver
- Seal: HNBR - FPM

Technical data
- Max working pressure: 420 bar
- Proof pressure: 630 bar
- Burst pressure: 1260 bar
- Working temperature: From -25 °C to +110 °C
- Compatibility with fluids: Mineral oils, Synthetic fluids HFB and HFC according to ISO 2943
- Degree protection: IP65 according to EN 60529

Electrical data
- Electrical connections: EN 175301-803
- Resistive load: 5 A / 250 Vac
- Available the connector with lamps

DLE*F50

Electrical/Visual Differential Pressure Indicator
With term. Connections: EN 175301-803

Settings	Ordering code
1.2 bar ±10%	DL E 12 x F 50 P01
2.0 bar ±10%	DL E 20 x F 50 P01
5.0 bar ±10%	DL E 50 x F 50 P01
7.0 bar ±10%	DL E 70 x F 50 P01
9.5 bar ±10%	DL E 95 x F 50 P01

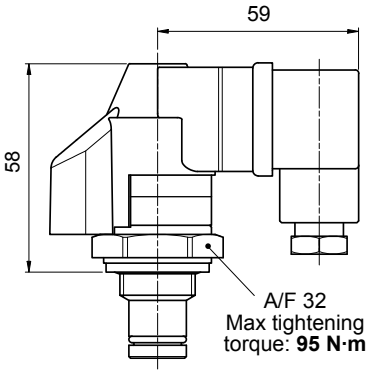

Hydraulic symbol

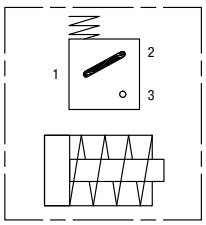

Electrical symbol

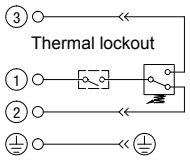

Materials
- Body: Brass
- Base: Black polyamide
- Contacts: Silver
- Seal: HNBR - FPM

Technical data
- Max working pressure: 420 bar
- Proof pressure: 630 bar
- Burst pressure: 1260 bar
- Working temperature: From -25 °C to +110 °C
- Compatibility with fluids: Mineral oils, Synthetic fluids HFB and HFC according to ISO 2943
- Degree protection: IP65 according to EN 60529

Electrical data
- Electrical connections: EN 175301-803
- Resistive load: 5 A / 250 Vac
- Thermal lockout setting: +30 °C

DLX*51 - DLX*52

Electrical/Visual Differential Pressure Indicator
Connection: EN 175301-803

51: Transparent base with lamps 24 Vdc
52: Transparent base with lamps 110 Vdc

Settings	Ordering code
1.2 bar ±10%	DL X 12 x A 5x P01
2.0 bar ±10%	DL X 20 x A 5x P01
5.0 bar ±10%	DL X 50 x A 5x P01
7.0 bar ±10%	DL X 70 x A 5x P01
9.5 bar ±10%	DL X 95 x A 5x P01

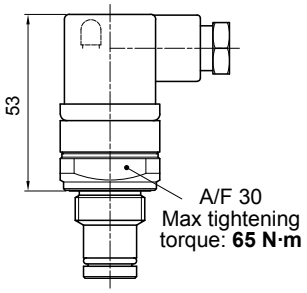

Hydraulic symbol

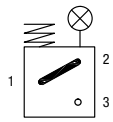

Electrical symbol

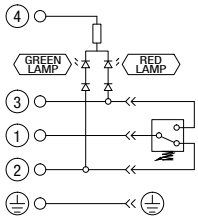

Materials
- Body: AISI 316L
- Base: Transparent polyamide
- Contacts: Silver
- Seal: HNBR - MFQ

Technical data
- Max working pressure: 420 bar
- Proof pressure: 630 bar
- Burst pressure: 1260 bar
- Working temperature: From -25 °C to +110 °C
- Compatibility with fluids: Mineral oils, Synthetic fluids HFB and HFC according to ISO 2943
- Degree protection: IP66 according to EN 60529 IP69K according to ISO 20653

Electrical data

- Electrical connection:	EN 175301-803	
- Type	51	52
- Lamps	24 Vdc	110 Vdc
- Resistive load:	1 A / 24 Vdc	1 A / 110 Vdc

DLZ*51 - DLZ*52

Electrical/Visual Differential Pressure Indicator
Connection: EN 175301-803

51: Transparent base with lamps 24 Vdc
52: Transparent base with lamps 110 Vdc

Settings	Ordering code
1.2 bar ±10%	DL Z 12 x A 5x P01
2.5 bar ±10%	DL Z 25 x A 5x P01
5.0 bar ±10%	DL Z 50 x A 5x P01
7.0 bar ±10%	DL Z 70 x A 5x P01
9.5 bar ±10%	DL Z 95 x A 5x P01

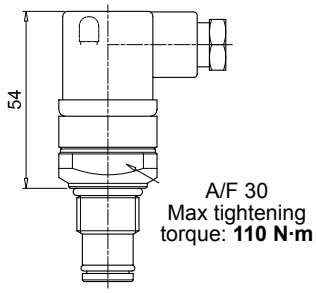

Hydraulic symbol

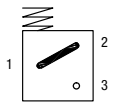

Electrical symbol

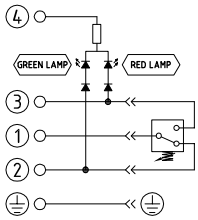

Materials
- Body: AISI 316L
- Base: Transparent polyamide
- Contacts: Silver
- Seal: HNBR - MFQ

Technical data
- Max working pressure: 700 bar
- Proof pressure: 1050 bar
- Burst pressure: 2100 bar
- Working temperature: From -25 °C to +110 °C
- Compatibility with fluids: Mineral oils, Synthetic fluids HFB and HFC according to ISO 2943
- Degree protection: IP66 according to EN 60529 IP69K according to ISO 20653

Electrical data

- Electrical connection:	EN 175301-803	
- Type	51	52
- Lamps	24 Vdc	110 Vdc
- Resistive load:	1 A / 24 Vdc	1 A / 110 Vdc

Dimensions

DTA*F70

Electronic Differential Pressure Indicator
Connection: IEC 61076-2-101 D (M12)

Settings	Ordering code
1.2 bar ±10%	DT A 12 x F 70 P01
2.0 bar ±10%	DT A 20 x F 70 P01
5.0 bar ±10%	DT A 50 x F 70 P01
7.0 bar ±10%	DT A 70 x F 70 P01
9.5 bar ±10%	DT A 95 x F 70 P01

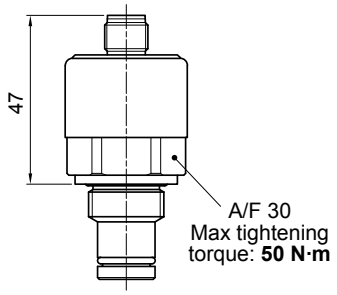

Hydraulic symbol

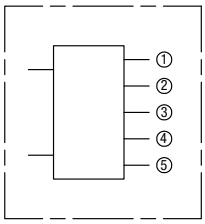

Electrical symbol

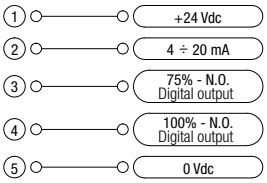

Materials
- Body: Brass
- Internal parts: Brass - Polyamide
- Contacts: Silver
- Seal: HNBR - FPM

Technical data
- Max working pressure: 420 bar
- Proof pressure: 630 bar
- Burst pressure: 1260 bar
- Compatibility with fluids: Mineral oils, Synthetic fluids HFB and HFC according to ISO 2943
- Degree protection: IP67 according to EN 60529

Electrical data
- Electrical connection: IEC 61076-2-101 D (M12)
- Power supply: 24 Vdc
- Analogue output: From 4 to 20 mA
- Thermal lockout: 30 °C (all output signals stalled up to 30 °C)

DVA

Visual Differential Pressure Indicator

Settings	Ordering code
1.2 bar ±10%	DV A 12 x P01
2.0 bar ±10%	DV A 20 x P01
5.0 bar ±10%	DV A 50 x P01
7.0 bar ±10%	DV A 70 x P01
9.5 bar ±10%	DV A 95 x P01

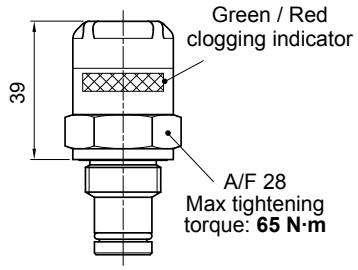

Hydraulic symbol

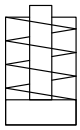

Materials
- Body: Brass
- Internal parts: Brass - Polyamide
- Seal: HNBR - FPM

Technical data
- Reset: Automatic reset
- Max working pressure: 420 bar
- Proof pressure: 630 bar
- Burst pressure: 1260 bar
- Working temperature: From -25 °C to +110 °C
- Compatibility with fluids: Mineral oils, Synthetic fluids HFB and HFC according to ISO 2943
- Degree protection: IP65 according to EN 60529

DVM

Visual Differential Pressure Indicator

Settings	Ordering code
1.2 bar ±10%	DV M 12 x P01
2.0 bar ±10%	DV M 20 x P01
5.0 bar ±10%	DV M 50 x P01
7.0 bar ±10%	DV M 70 x P01
9.5 bar ±10%	DV M 95 x P01

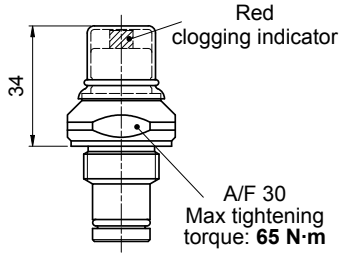

Hydraulic symbol

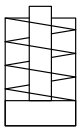

Materials
- Body: Brass
- Internal parts: Brass - Polyamide
- Seal: HNBR - FPM

Technical data
- Reset: Manual reset
- Max working pressure: 420 bar
- Proof pressure: 630 bar
- Burst pressure: 1260 bar
- Working temperature: From -25 °C to +110 °C
- Compatibility with fluids: Mineral oils, Synthetic fluids HFB and HFC according to ISO 2943
- Degree protection: IP65 according to EN 60529

DVS

Visual Differential Pressure Indicator

Settings	Ordering code
1.2 bar ±10%	DV S 12 H P01
2.5 bar ±10%	DV S 25 H P01
4.0 bar ±10%	DV S 40 H P01

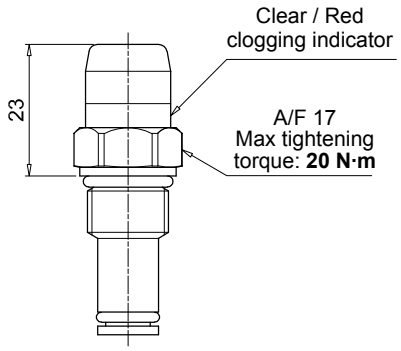

Hydraulic symbol

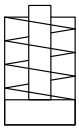

Materials
- Body: Brass
- Internal parts: Brass - Polyamide
- Seal: HNBR

Technical data
- Reset: Automatic reset
- Max working pressure: 16 bar
- Proof pressure: 24 bar
- Burst pressure: 48 bar
- Working temperature: From -25 °C to +110 °C
- Compatibility with fluids: Mineral oils, Synthetic fluids HFB and HFC according to ISO 2943
- Degree protection: IP67 according to EN 60529

DVX

Visual Differential Pressure Indicator

Settings	Ordering code
1.2 bar ±10%	DV X 12 x P01
2.0 bar ±10%	DV X 20 x P01
5.0 bar ±10%	DV X 50 x P01
7.0 bar ±10%	DV X 70 x P01
9.5 bar ±10%	DV X 95 x P01

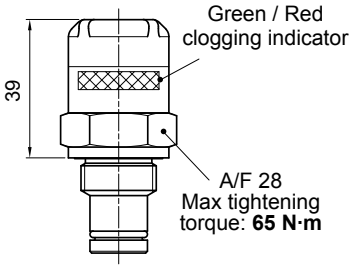

Hydraulic symbol

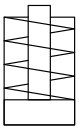

Materials
- Body: AISI 316L
- Internal parts: AISI 316L - Polyamide
- Seal: HNBR - MFQ

Technical data
- Reset: Automatic reset
- Max working pressure: 420 bar
- Proof pressure: 630 bar
- Burst pressure: 1260 bar
- Working temperature: From -25 °C to +110 °C
- Compatibility with fluids: Mineral oils, Synthetic fluids HFB and HFC according to ISO 2943
- Degree protection: IP65 according to EN 60529

DVY

Visual Differential Pressure Indicator

Settings	Ordering code
1.2 bar ±10%	DV Y 12 x P01
2.0 bar ±10%	DV Y 20 x P01
5.0 bar ±10%	DV Y 50 x P01
7.0 bar ±10%	DV Y 70 x P01
9.5 bar ±10%	DV Y 95 x P01

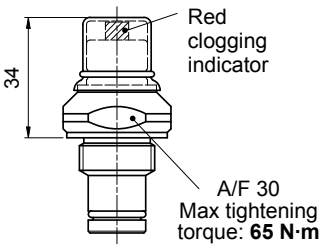

Hydraulic symbol

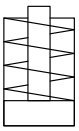

Materials
- Body: AISI 316L
- Internal parts: AISI 316L - Polyamide
- Seal: HNBR - MFQ

Technical data
- Reset: Manual reset
- Max working pressure: 420 bar
- Proof pressure: 630 bar
- Burst pressure: 1260 bar
- Working temperature: From -25 °C to +110 °C
- Compatibility with fluids: Mineral oils, Synthetic fluids HFB and HFC according to ISO 2943
- Degree protection: IP65 according to EN 60529

Dimensions

DVZ

Visual Differential Pressure Indicator

Settings	Ordering code
1.2 bar ±10%	DV Z 12 x P01
2.5 bar ±10%	DV Z 25 x P01
5.0 bar ±10%	DV Z 50 x P01
7.0 bar ±10%	DV Z 70 x P01
9.5 bar ±10%	DV Z 95 x P01

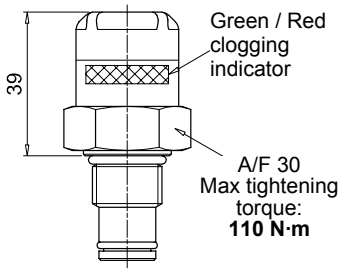

Hydraulic symbol

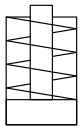

Materials

- Body: AISI 316L
- Internal parts: AISI 316L - Polyamide
- Seal: HNBR - MFQ

Technical data

- Reset: Automatic reset
- Max working pressure: 700 bar
- Proof pressure: 1050 bar
- Burst pressure: 2100 bar
- Working temperature: From -25 °C to +110 °C
- Compatibility with fluids: Mineral oils, Synthetic fluids HFB and HFC according to ISO 2943
- Degree protection: IP65 according to EN 60529

T2

Plug

Seal	Ordering code
HNBR	T2 H
FPM	T2 V

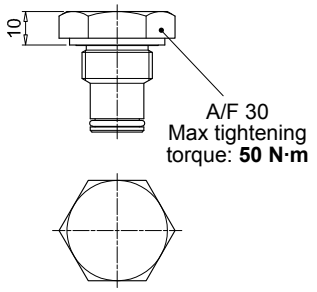

Materials
- Body:
  Phosphatized steel
- Seal:
  HNBR / FPM

T4

Plug

Seal	Ordering code
NBR	T4 A

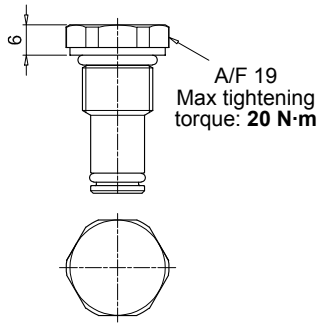

Materials
- Body:
  Anodized aluminium
- Seal:
  NBR

X2

Stainless Steel plug 420 bar

Seal	Ordering code
HNBR	X2 H
FPM	X2 V
MFQ	X2 F

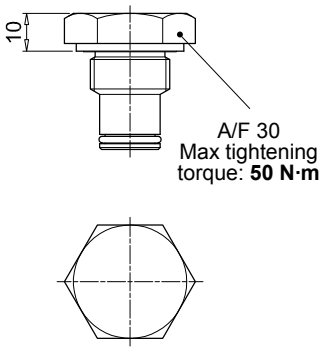

Materials
- Body:
  AISI 316L
- Seal:
  HNBR / FPM / MFQ

X3

Stainless Steel plug 700 bar (only for FZH)

Seal	Ordering code
HNBR	X3 H
FPM	X3 V
MFQ	X3 F

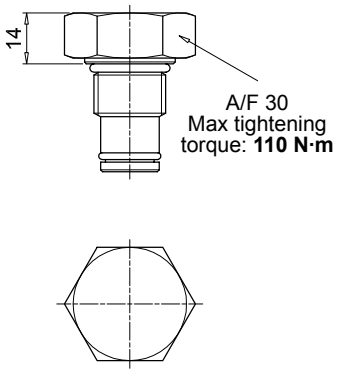

Materials
- Body:
  AISI 316L
- Seal:
  HNBR / FPM / MFQ

NOTES

All data, details and words contained in this publication are provided for use by technically qualified personnel at their discretion, without warranty of any kind.
MP Filtri reserves the right to make modifications to the models and versions of the described products at any time for both technical and/or commercial reasons.
For updated information please visit our website: *www.mpfiltri.com*
The colors and the pictures of the products are purely indicative.
Any reproduction, partial or total, of this document is strictly forbidden.
All rights are strictly reserved

WORLDWIDE NETWORK

CANADA • CHINA • FRANCE • GERMANY • INDIA • SINGAPORE
UNITED ARAB EMIRATES • UNITED KINGDOM • USA

MPFILTRI®

PASSION TO PERFORM

mpfiltri.com
Scan or click me!

MP Filtri reserves the right to make modifications to the models and versions of the described products at any time for both technical and/or commercial reasons.
For updated information please visit our website: www.mpfiltri.com. The colors and the pictures of the products are purely indicative.
Any reproduction, partial or total, of this document is strictly forbidden. All rights are strictly reserved

MF001000017
EN - 2025.04