HYDRAULIC FILTRATION
PRODUCTS

RETURN / SUCTION FILTERS

PASSION TO PERFORM

MPFILTRI®

A WORLDWIDE LEADER IN THE FIELD OF HYDRAULIC FILTRATION EQUIPMENT.

Our company started life in 1964, when Bruno Pasotto decided to attempt to cater for the requests of a market still to be fully explored, with the study, design, development, production and marketing of a vast range of filters for hydraulic equipment, capable of satisfying the needs of manufacturers in all sectors. The quality of our products, our extreme competitiveness compared with major international producers and our constant activities of research, design and development has made us a worldwide leader in the field of hydraulic circuit filtering.
Present for over 50 years in the market, we have played a truly decisive role in defining our sector, and by now we are a group capable of controlling our entire chain of production, monitoring all manufacturing processes to guarantee superior quality standards and to provide concrete solutions for the rapidly evolving needs of customers and the market.

MARKET **LEADER**

Our work is based on a skillful interaction between advanced technology and fine workmanship, **customizing products according to specific market requests**, focusing strongly on innovation and quality, and following every step in the manufacturing of both standard and special products, fully respecting customer expectations.

Our customer-oriented philosophy, which enables us to satisfy all customer requests **rapidly** and **with personalized products**, makes us a **dynamic and flexible enterprise**. The possibility of constantly controlling and monitoring the entire production process is essential to allow us to guarantee the quality of our products.

WORLDWIDE PRESENCE

Our foreign Branches enable us to offer a diversified range of products that allow us to successfully face the aggressive challenge of international competition, and also to maintain a stable presence at a local level.

The Group boasts **8** **business branches**

TECHNOLOGY

Our constant **quest for excellence in quality and technological innovation** allows us to offer only the best solutions and services for applications in many fields, including general industry, test rigs, lubrication, heavy engineering, renewable energies, naval engineering, offshore engineering, aviation systems, emerging technologies and mobile plant (i.e. tractors, excavators, concrete pumps, platforms).

AND PRODUCTION

Our high level of technological expertise means **we can rely entirely on our own resources, without resorting to external providers.** This in turn enables us to satisfy a growing number of customer requests, also exploiting our constantly updated range of machines and equipment, featuring **fully-automated workstations** capable of **24-hour production**.

SUCTION FILTERS

Flow rates
up to 875 l/min

Mounting:
- Tank immersed
- In-Line
- In tank with shut off valve
- In tank with flooded suction

RETURN FILTERS

Flow rates
up to 3000 l/min

Pressure
up to 20 bar

Mounting:
- In-Line
- Tank top
- In single and duplex designs

RETURN / SUCTION FILTERS

Flow rates
up to 300 l/min

Pressure
up to 80 bar

Mounting:
- In-Line
- Tank top

SPIN-ON FILTERS

Flow rates
up to 365 l/min

Pressure
up to 35 bar

Mounting:
- In-Line
- Tank top

LOW & MEDIUM PRESSURE FILTERS

Flow rates
up to 3000 l/min

Pressure
up to 80 bar

Mounting:
- In-Line
- Parallel manifold version
- In single and duplex designs

HIGH PRESSURE FILTERS

Flow rates
up to 750 l/min

Pressure from 110 bar
up to 560 bar

Mounting:
- In-Line
- Manifold
- In single and duplex designs

PRODUCT RANGE

MP Filtri can offer a vast and articulated range of products for the global market, suitable for all industrial sectors using hydraulic equipment.

This includes filters (suction, return, return/suction, spin-on, pressure, stainless steel pressure) and structural components (motor/pump bell-housings, transmission couplings, damping rings, foot brackets, aluminium tanks, cleaning covers).

We can provide all the skills and solutions required by the modern hydraulics industry to monitor contamination levels and other fluid conditions.

Mobile filtration units and a full range of accessories allow us to supply everything necessary for a complete service in the hydraulic circuits.

STAINLESS STEEL HIGH PRESSURE FILTERS

Flow rates up to 125 l/min
Pressure from 320 bar
up to 1000 bar

Mounting:
- In-Line
- Manifold
- In single and duplex designs

CONTAMINATION MONITORING PRODUCTS

- Online, in-line particle counters
- Off-line bottle sampling products
- Fully calibrated using relevant ISO standards
- A wide range of variants to support fluid types and communication protocols

MOBILE FILTRATION UNITS

Flow rates from 15 l/min
up to 200 l/min

POWER TRANSMISSION PRODUCTS

- Aluminium bell-housings for motors from 0.12 kW to 400 kW
- Couplings in Aluminium Cast Iron - Steel
- Damping rings
- Foot bracket
- Aluminium tanks
- Cleaning covers

TANK ACCESSORIES

- Oil filler and air breather plugs
- Optical and electrical level gauges
- Pressure gauge valve selectors
- Pipe fixing brackets
- Pressure gauges

HYDRAULIC FILTRATION PRODUCTS

1 page	INTRODUCTION
1	COMPANY
6	PRODUCT RANGE
11	CONTAMINATION MANAGEMENT
22	FILTER SIZING
24	CORRECTIVE FACTOR

28 page	SUCTION FILTERS		up to Q_{max} l/min	up to Q_{max} gpm
31	STR & MPA - MPM	Submerged suction filter, with bypass or magnetic column	875	231
39	SF2 250 - 350	Semi-submerged positive head suction filter, low flow rate	160	42
47	SF2 500	Semi-submerged positive head suction filter, high flow rate	800	211
57	CLOGGING INDICATORS			

60 page	RETURN FILTERS		up to P_{max} bar	up to P_{max} psi	up to Q_{max} l/min	up to Q_{max} gpm
63	MPFX	Tank top semi-immersed filter, standard filter element disassembly	8	116	750	198
91	MPLX	Tank top semi-immersed filter, standard filter element disassembly	10	145	1800	476
99	MPTX	Tank top semi-immersed filter, easy filter element disassembly	8	116	300	79
117	MFBX	Bowl assembly	8	116	500	132
125	MPF	Tank top semi-immersed filter, standard filter element disassembly	8	116	750	198
153	MPT	Tank top semi-immersed filter, easy filter element disassembly	8	116	300	79
171	MFB	Bowl assembly	8	116	500	132
179	MPH	Tank top semi-immersed filter, standard filter element disassembly	10	145	3000	793
203	MPI	Tank top semi-immersed filter, standard filter element disassembly	10	145	3000	793
215	FRI	Tank top semi-immersed filter, easy filter element disassembly, it can be used also as in-line filter	20	290	1500	396
231	RF2	Semi-immersed under-head filter, easy filter element disassembly	20	290	350	92
238	CLOGGING INDICATORS					
248	ACCESSORIES					

250 page	RETURN / SUCTION FILTERS		up to P_{max} bar	up to P_{max} psi	up to Q_{max} l/min	up to Q_{max} gpm
253	MRSX	Unique TANK TOP filter for mobile machinery, with combined filtration on return and suction to the inlet at the hydrostatic transmissions in closed circuit	10	145	300	79
265	LMP 124 MULTIPORT	Unique IN-LINE filter for mobile machinery, with combined filtration on return and suction to the inlet at the hydrostatic transmissions in closed circuit	80	1160	200	53
273	CLOGGING INDICATORS					

286 page	SPIN-ON FILTERS		up to P_{max} bar	up to P_{max} psi	up to Q_{max} l/min	up to Q_{max} gpm
289	MPS	Low pressure filter, available with single cartridge (CS) for in-line or flange mounting or with two cartridge on the same axis on the opposite sides	12	174	365	96
305	MSH	In-line low and medium pressure filter available with single cartridge (CH)	35	508	195	52
311	CLOGGING INDICATORS					

INDEX

322 page		LOW & MEDIUM PRESSURE FILTERS	up to P_{max} bar	psi	up to Q_{max} l/min	gpm
325	LMP 110 - 120 - 123 MULTIPORT	In-line filter with Multiport design for multiple choice connection	80	1160	200	53
341	LMP 210 - 211	In-line low & medium pressure filter, low flow rate	60	870	330	87
351	LMP 400 - 401 & 430 - 431	In-line low & medium pressure filter, high flow rate	60	870	740	195
363	LMP 950 - 951	In-line filter, available with 2 and up to 6 different heads	30	435	2400	634
371	LMP 952 - 953 - 954	In-line low pressure filter specifically designed to be mounted in series	25	363	3000	793
383	LMD 211	In-line duplex medium pressure filter	60	870	330	87
391	LMD 400 - 401 & 431	In-line duplex low pressure filter	16	232	590	156
407	LMD 951	In-line duplex filter, available with 2 up to 6 different heads	16	232	1200	317
415		Filter elements designed according to DIN 24550				
417	LDP - LDD	In-line and duplex medium pressure filter	60	870	330	87
427	LMP 900 - 901	In-line low pressure filter	30	435	2000	528
435	LMP 902 - 903	In-line filter specifically designed to be mounted in series	20	290	3000	793
444	CLOGGING INDICATORS					
450	ACCESSORIES					

452 page		HIGH PRESSURE FILTERS	up to P_{max} bar	psi	up to Q_{max} l/min	gpm
455	FMP 039	Filter high pressure, low flow rate applications	110	1595	80	21
463	FMP	Filter high pressure, high flow rate applications	320	4641	475	125
475	FHP	Typical high pressure filter for mobile applications, high flow rate	420	6092	750	198
493	FMM	Typical high pressure filter for mobile applications, low flow rate	420	6092	250	66
503	FHA 051	Filter optimized for use in high pressure operating systems, low flow rate	560	8122	140	37
511	FHM	High pressure filter with intermediate manifold construction	320	4641	450	119
529	FHB	High pressure for block mounting	320	4641	485	128
543	FHF 325	In-line manifold top mounting	350	5076	500	132
553	FHD	In-line duplex high pressure filter	350	5076	345	91
566	CLOGGING INDICATORS					

574 page		STAINLESS STEEL HIGH PRESSURE FILTERS	up to P_{max} bar	psi	up to Q_{max} l/min	gpm
577	FZP	In-line pressure filter with threaded mount	420	6092	150	40
587	FZH	In-line pressure filter with threaded mount for higher pressure	700	10153	50	13
597	FZX	In-line pressure filter with threaded mount up to 1000 bar	1000	14504	10	3
605	FZM	Manifold top mounting	320	4641	70	18
613	FZB	Manifold side mounting	320	4641	75	20
621	FZD	Duplex pressure filter for continuous operation requirements	350	5076	90	24
631	CLOGGING INDICATORS					

636 page		CLOGGING INDICATORS
639	QUICK REFERENCE GUIDE	

THE CORRECT FILTER SIZING HAVE TO BE BASED ON THE TOTAL PRESSURE DROP DEPENDING BY THE APPLICATION.
THE MAXIMUM TOTAL PRESSURE DROP ALLOWED BY A NEW AND CLEAN RETURN/SUCTION FILTER HAVE TO BE IN THE RANGE 0.8 ÷ 1.0 bar.

The pressure drop calculation is performed by adding together the value of the housing with the value of the filter element. The pressure drop Δpc of the housing is proportional to the fluid density (kg/dm³); all the graphs in the catalogue are referred to mineral oil with density of 0.86 kg/dm³.
The filter element pressure drop Δpe is proportional to its viscosity (mm²/s), the corrective factor Y have to be used in case of an oil viscosity different than 30 mm²/s (cSt).

Sizing data for single filter element, head at top

Δpc = Filter housing pressure drop [bar]
Δpe = Filter element pressure drop [bar]
Y = Corrective factor Y (see correspondent table), depending on the filter type, on the filter element size, on the filter element length and on the filter media
Q = flow rate (l/min)
V1 reference oil viscosity = 30 mm²/s (cSt)
V2 = operating oil viscosity in mm²/s (cSt)

Filter element pressure drop calculation with an oil viscosity different than 30 mm²/s (cSt)

Δpe = Y : 1000 x Q x (V2:V1)
Δp Tot. = Δpc + Δpe

Verification formula

Δp Tot. ≤ Δp max allowed

Maximum total pressure drop (Δp max) allowed by a new and clean filter

Application	Range (bar)
Suction filters	0.08 ÷ 0.10
Return filters	0.4 ÷ 0.6
Return - Suction filters*	0.8 ÷ 1.0
Low & Medium Pressure filters	0.4 ÷ 0.6 return lines
	0.3 ÷ 0.5 lubrication lines
	0.3 ÷ 0.4 off-line in power systems
	0.1 ÷ 0.3 off-line in test benches
	0.4 ÷ 0.6 over-boost
High Pressure filters	0.8 ÷ 1.5
Stainless Steel filters	0.8 ÷ 1.5

***** The suction flow rate should not exceed 30% of the return flow rate

Generic filter calculation example

Application data:
Telehandler with hydrostatic system
Pressure Pmax = 10 bar
Flow rate Q = 200 l/min
Viscosity V2 = 46 mm²/s (cSt)
Oil density = 0.86 kg/dm³
Required filtration efficiency = 25 µm with absolute filtration
With bypass valve and G 1" inlet connection

Calculation:
Δpc = 0.7 bar (see graphic below)

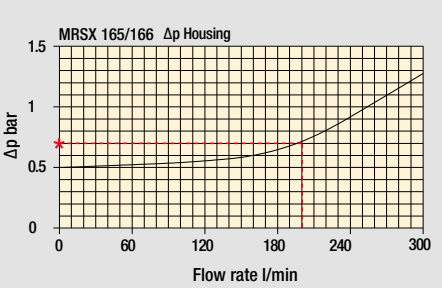

Filter housings Δp pressure drop.
The curves are plotted using mineral oil with density of 0.86 kg/dm³ in compliance with ISO 3968.
Δp varies proportionally with density.

Δpe = (0.61 : 1000) x 200 x (46 : 30) = 0.19 bar

Filter element		Absolute filtration H Series		Nominal filtration N Series
Type		A10	A16	A25
RSX 116	1	5.12	4.33	3.85
	2	2.22	1.87	1.22
RSX 165 RSX 166	1	2.06	1.75	1.46
	2	1.24	1.05	0.96
	3	0.94	0.86	0.61

Δp Tot. = 0.58 + 0.14 = 0.72 bar

The selection is correct because the total pressure drop value is inside the admissible range for return/suction filters.
In case the allowed max total pressure drop is not verified, it is necessary to repeat the calculation changing the filter length/size.

Corrective factor

Corrective factor Y to be used for the filter element pressure drop calculation. The values depend to the filter size and length and to the filter media.
Reference oil viscosity 30 mm^2/s

Return / Suction filters

Filter element		Absolute filtration		
Type		A10	A16	A25
RSX 116	1	5.12	4.33	3.85
	2	2.22	1.87	1.22
RSX 165 RSX 166	1	2.06	1.75	1.46
	2	1.24	1.05	0.96
	3	0.94	0.86	0.61

Filter element		Absolute filtration N Series							
Type		A03	A06	A10	A16	A25	P10	P25	M25 M60 M90
CU 110	1	16.25	15.16	8.75	8.14	5.87	2.86	2.65	0.14
	2	12.62	10.44	6.11	6.02	4.16	1.60	1.49	0.12
	3	8.57	7.95	5.07	4.07	2.40	1.24	1.15	0.11
	4	5.76	4.05	2.80	2.36	1.14	0.91	0.85	0.05

TYPICAL FILTER SIZING Selection Software

Step 1 Select "FILTERS"

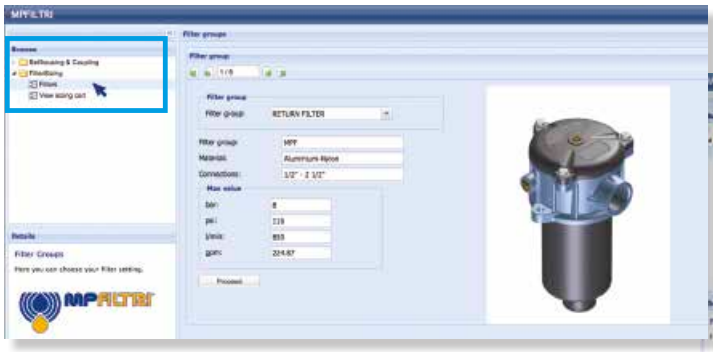

Step 2 Choose filter group (Return Filter, Pressure Filter, etc.)

Step 3 Choose filter type (MPF, MPT, etc.) in function of the max working pressure and the max flow rate

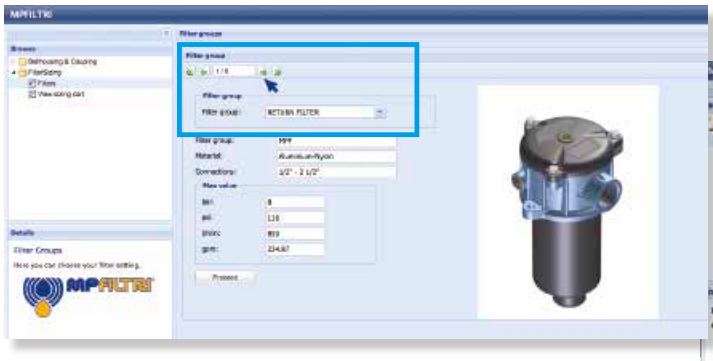

Step 4 Push "PROCEED"

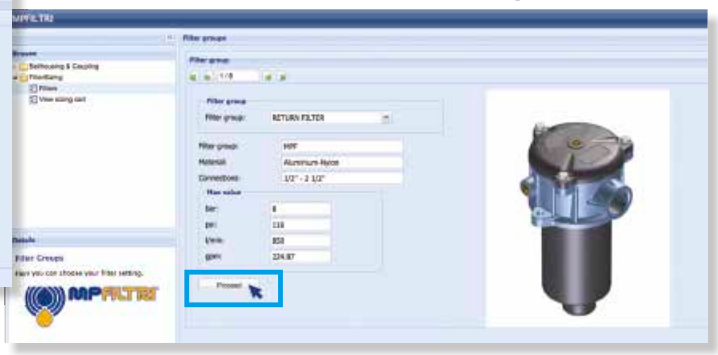

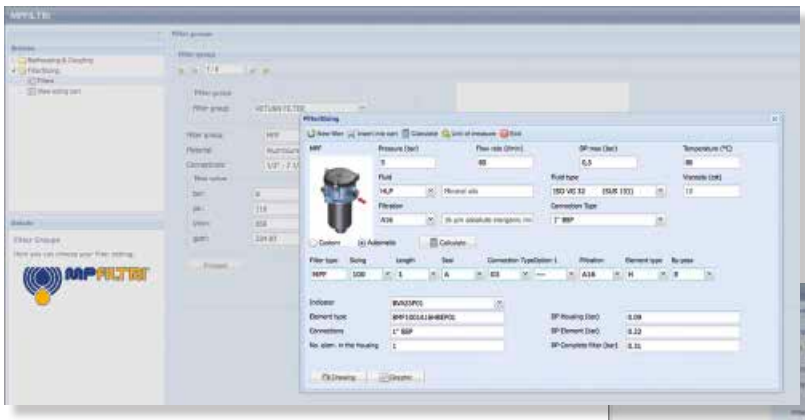

Step 5

Insert all application data to calculate the filter size following the sequence:

- working pressure
- working flow rate
- working pressure drop
- working temperature
- fluid material and fluid type
- filtration media
- connection type

Step 6

Push "CALCULATE" to have result; in case of any mistake, the system will advice which parameter is out of range to allow to modify/adjust the selection

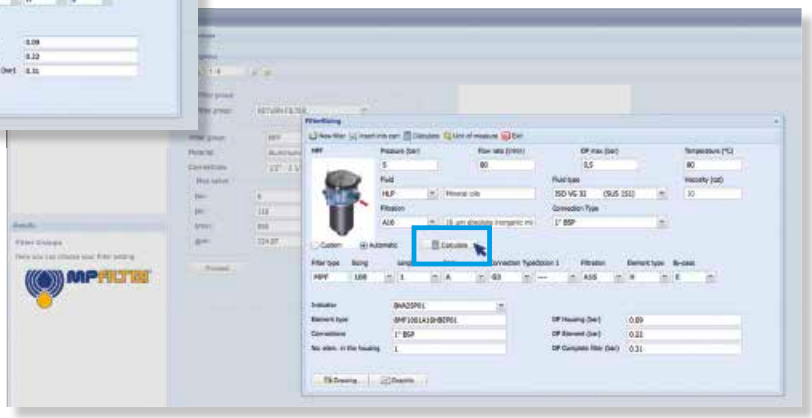

Step 7

Download PDF Datasheet "Report.aspx" pushing the button "Drawing"

Hydraulic combined filters for installation on the return and suction lines of hydrostatic transmissions (HSTs) for commercial vehicles, construction machinery, agricultural vehicles, and mobile work equipment with hydrostatic drive.

Advantage for the installation:
- **Space-saving assembly**
- **Reduced assembly time**
- **Fewer connections to the tank**
- **Protection from the pollution of the tank**

Advantages for the operativity:
- **Absolute filtration of the oil for the hydrostatic drive**
- **Fulfilment of the purity requirements according to ISO 4406, as specified by the manufacturer of the driving drives.**
- **Protection against damages from cavitation even under adverse conditions, i.e. cold start**
- **Less formation of free air in the system**
- **Easier maintenance operations (one spare filter element instead of two)**

FILTER SIZING

For the proper corrective factor Y click here.

Return / Suction filters

MRSX	page 253
LMP 124 MULTIPORT	265
INDICATORS	273

MY CLEAN

THE NEW FILTER CONCEPT

MRSX RSX series

NEW FILTER ELEMENT WITH EXCLUSIVE INTERFACE CONNECTION

- **Protects the machine from improper use of non-original products.**
- **Safety of constant quality protection & reliability**

With exclusive filter element you are sure that only MP Filtri filter elements can be used, ensuring the best cleaning level of the oil due to the use of originals filter elements.

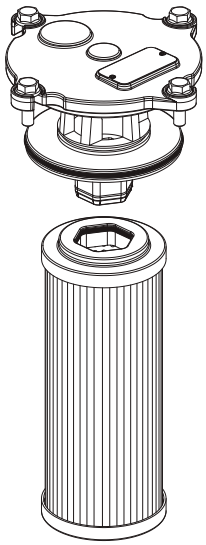

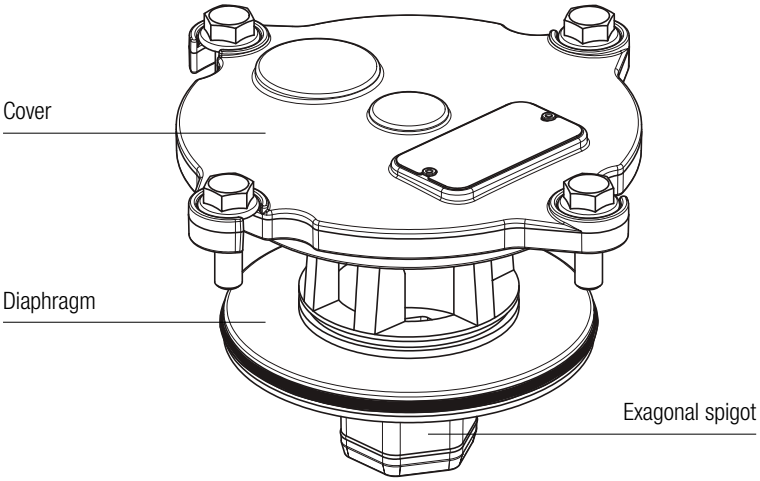

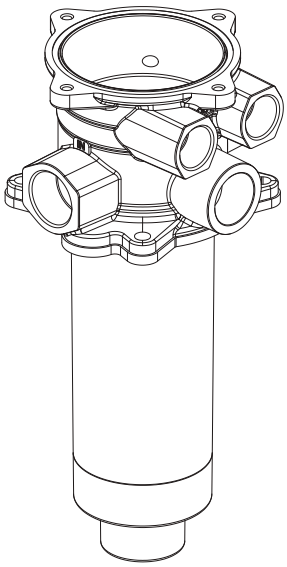

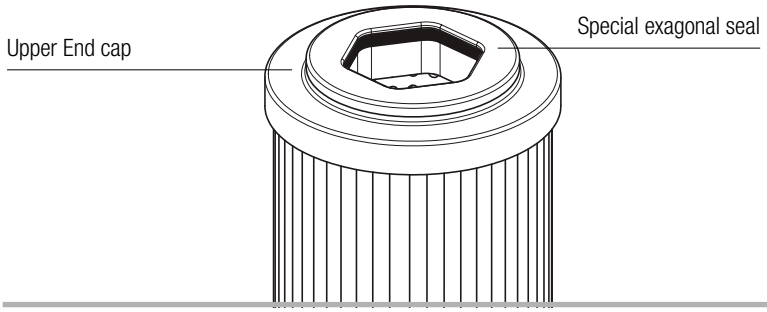

The products identified as MRSX and RSX are protected by:
Italian Patent n° 102015000040473
Canadian Patent n° 2,937,258

and by the following patent applications:
European Patent Pending: n° 16181725.9
US Patent Pending: n° 15/224,337

MRSX series

Maximum working pressure up to 1 MPa (10 bar) - Flow rate up to 300 l/min

MRSX GENERAL INFORMATION

Description

Return / Suction filter	Tank mounted

Maximum working pressure up to 1 MPa (10 bar)
Flow rate up to 300 l/min

MRSX is a range of suction/return filters for hydraulic systems with two or more circuits (both open and closed loops). They are able to provide pressurized oil cleaned by fine filtration to the feed pump of the hydrostatic systems.
They are directly fixed to the reservoir, in immersed or semi-immersed position.
The filter output must be always immersed into the fluid to avoid aeration or foam generation into the reservoir.

Available features:
- Female threaded return connections up to 1 1/4", for a maximum return flow rate of 300 l/min
- Multiple connections, to connect several return and suction lines
- Fine filtration rating, to get a good cleanliness level into the reservoir
- Bypass valve to the tank, to relieve excessive pressure drop across the filter media when the return flow is enough higher than the suction flow
- Bypass valve to the suction line with additional suction filter element, to relieve excessive pressure drop across the filter media when the return flow is not enough higher than the suction flow
- De-pressurization valve, to reduce the pressure inside the filter during the maintenance operations
- Anti-cavitation valve with additional suction filter element, to ensure fluid to the feed pump of the hydrostatic systems during cold starts or initial filling
- O-ring or Flat Seal to suit a variety of reservoir surfaces
- Reservoir side mounting, to save space in the machines
- Visual, electrical and electronic clogging indicators
- MYclean interface connection, to protect the product against non-original spare parts
- External protective wrap, to optimize the flow through the element and to save the element efficiency against non-proper handling

Common applications:
Mobile machines with hydrostatic systems on board
(i.e. skid steer loaders, telehandlers, dumpers, road sweepers)

Technical data

Filter housing materials
- Head: Aluminium

- Cover
  Nylon: MRSX 116
  Aluminium: MRSX 165-166

- Bowl: Nylon

Δp element type
- RSX: 10 bar
- Oil flow from exterior to interior.

Seals
- Standard NBR series A
- Optional FPM series V

Temperature
From -25 °C to +110 °C

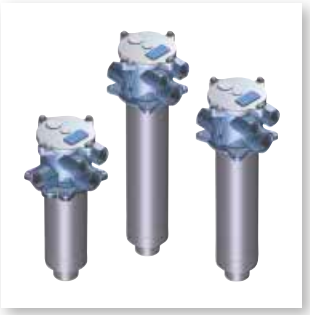

FILTER ASSEMBLY SIZING
Flow rates [l/min]

Filter series	Length	A10	A16	A25
MRSX 116	1	74	82	87
	2	108	113	124
MRSX 165 - 166	1	155	166	178
	2	187	196	200
	3	201	205	217

Maximum flow rate for a complete return/suction filter with a pressure drop Δp = 1 bar.
The reference fluid has a kinematic viscosity of 30 mm^2/s (cSt) and a density of 0.86 kg/dm^3.
For different pressure drop or fluid viscosity we recommend to use our selection software available on www.mpfiltri.com.
You can also calculate the right size using the formulas present on the FILTER SIZING paragraph at the beginning of the full catalogue or at the beginning of the filter family brochure.
Please, contact our Sales Department for further additional information.

Hydraulic symbols

Valves A option	Valves B option	Valves C option	Valves D option	Valves E option	Filter series
					MRSX 116

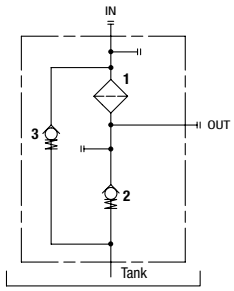

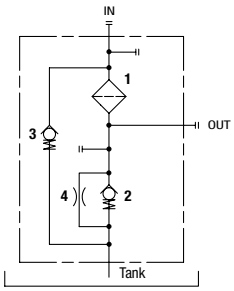

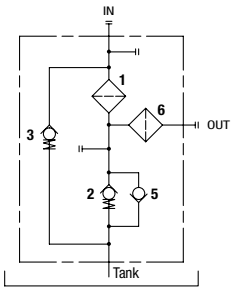

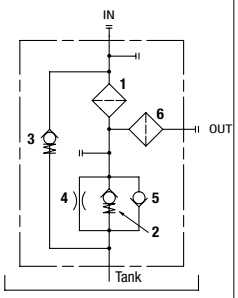

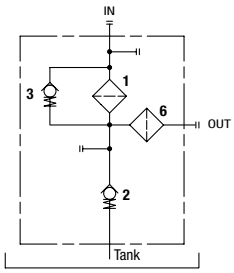

Valves F option	Valves G option	Valves H option	Valves I option	Valves M option
			Suitable only for tank side-wall mounting	

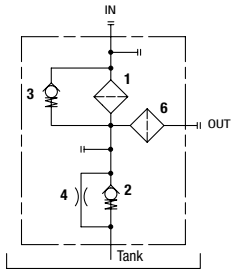

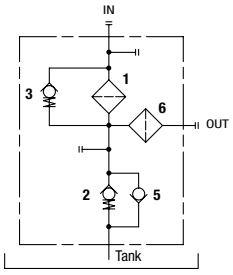

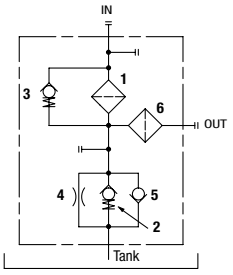

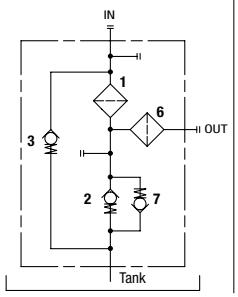

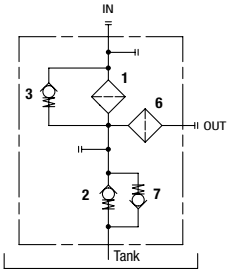

Valves A option	Valves B option	Valves C option	Valves D option	Valves E option	Filter series
					MRSX 165-166

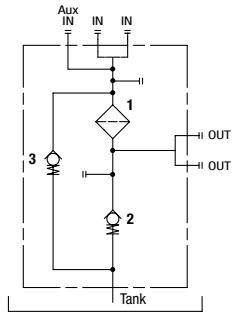

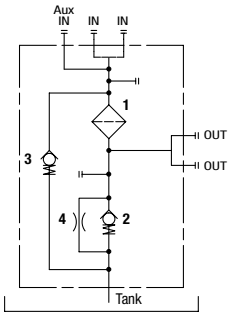

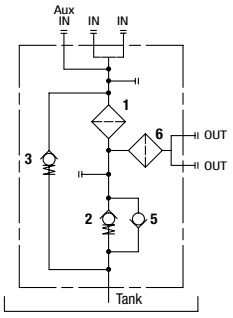

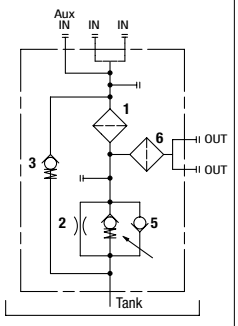

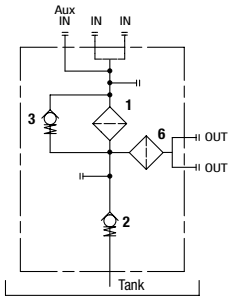

Valves F option	Valves G option	Valves H option	Valves I option	Valves M option
			Suitable only for tank side-wall mounting	

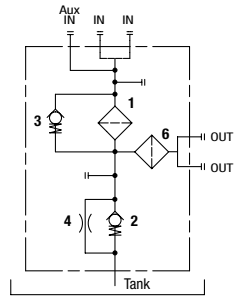

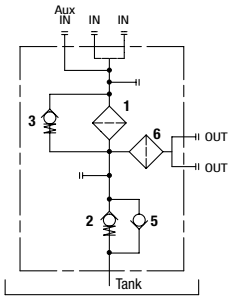

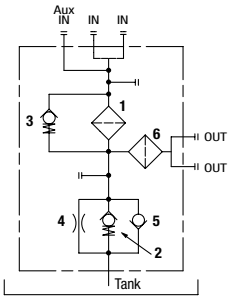

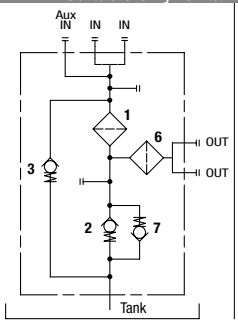

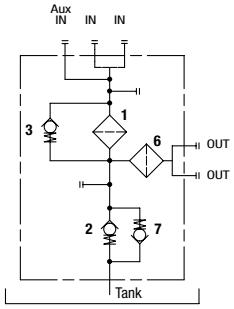

LEGEND

1 - Filter element
2 - Back-Pressure valve: opening pressure 0.5 bar ±10%
3 - Bypass valve: opening pressure 2.5 bar ±10%
4 - Depressurization valve
5 - Anti-Cavitation valve
6 - Safety filter element (wire mesh 60 µm)
7 - Anti-Cavitation valve / Anti-Emptying valve

Pressure drop

Filter housings Δp pressure drop

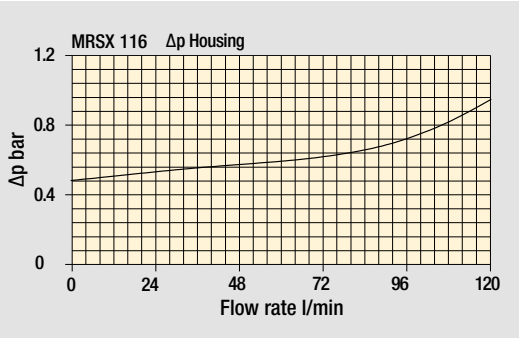

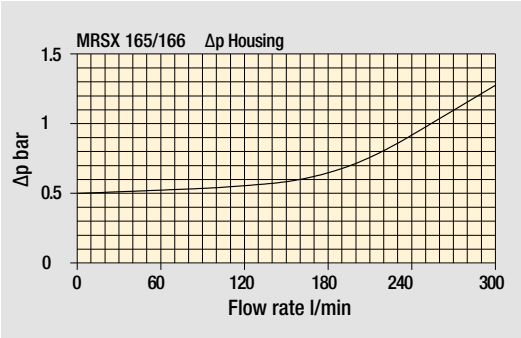

Bypass valve pressure drop

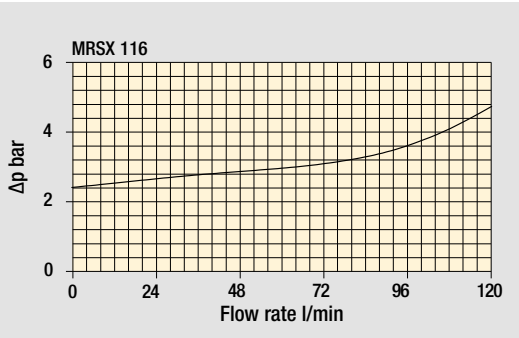

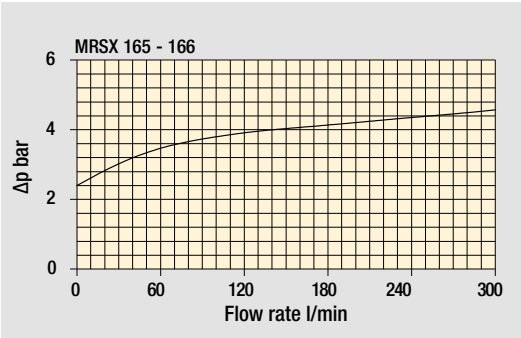

The curves are plotted using mineral oil with density of 0.86 kg/dm^3 in compliance with ISO 3968. Δp varies proportionally with density.

Weights [kg] and volumes [dm^3]

Filter series	Weights [kg]				Volumes [dm^3]			
	Length	1	2	3	Length	1	2	3
MRSX 116		1.30	1.40	-		0.80	1.00	-
MRSX 165		3.40	3.80	4.10		2.00	2.60	3.00
MRSX 166		3.40	3.80	4.10		2.00	2.60	3.00

MRSX MRSX116

Designation & Ordering code

COMPLETE FILTER

Configuration example: MRSX116 | 1 | B | A | G1 | 0 | A16 | B | P01

Series and size

MRSX116 Filter element with private spigot

Length

1 | **2**

Hydraulic diagram configuration - see page 257

	Bypass valve to tank	Bypass valve to OUT
A | **B** | **C** | **D**	•	
E | **F** | **G** | **H**		•
I	•	
M		•

Seals and treatments

A	NBR, O-Ring on head	**B**	NBR, flat seal on head
V	FPM, O-Ring on head	**D**	FPM, flat seal on head

	Connections IN	Connections OUT
G1	G 3/4”	G 3/4”
G2	G 1”	G 1”
G3	3/4” NPT	3/4” NPT
G4	1” NPT	1” NPT
G5	SAE 12 - 1 1/16” - 12 UN	SAE 12 - 1 1/16” - 12 UN
G6	SAE 16 - 1 5/16” - 12 UN	SAE 16 - 1 5/16” - 12 UN
D1	G 1”	G 3/4”
D2	1” NPT	3/4” NPT
D3	SAE 16 - 1 5/16” - 12 UN	SAE 12 - 1 1/16” - 12 UN

Aux IN connection

0 Without aux IN connection

Filtration rating (filter media)

A10 Inorganic microfiber 10 µm
A16 Inorganic microfiber 16 µm
A25 Inorganic microfiber 25 µm

Valves configuration

Mounting position	A	B	C	D	E	F	G	H	I	M
S Standard	•	•	•	•	•	•	•	•		
B Tank side-wall mounting	•	•			•	•			•	•

Execution

P01 MP Filtri standard
Pxx Customized

FILTER ELEMENT

Configuration example: RSX116 | 1 | A16 | A | P01

Element series and size

RSX116 Filter element with private spigot

Element length

1 | **2**

Filtration rating (filter media)

A10 Inorganic microfiber 10 µm
A16 Inorganic microfiber 16 µm
A25 Inorganic microfiber 25 µm

Seals

A NBR
V FPM

Execution

P01 MP Filtri standard
Pxx Customized

ACCESSORIES

Indicators on Return Line		page
BVA	Axial pressure gauge	278
BVR	Radial pressure gauge	278
BVP	Visual pressure indicator with automatic reset	279
BVQ	Visual pressure indicator with manual reset	279

		page
BEA	Electrical pressure indicator	276
BEM	Electrical pressure indicator	276
BET	Electrical pressure indicator	276-277
BLA	Electrical / visual pressure indicator	277-278

Indicators on Suction Line		page
VVB	Axial vacuum gauge	275
VVS	Radial vacuum gauge	275

		page
VEB	Electrical vacuum indicator	274
VLB	Electrical / visual vacuum indicator	274

MRSX116		
Filter length	**H1 [mm]**	**H2 [mm]**
1	203	240
2	263	300

Connections	T
G1 - G2	G 1/8”
G3 - G4	1/8” NPT
G5 - G6	1/8” NPT
D1	G 1/8”
D2 - D3	1/8” NPT

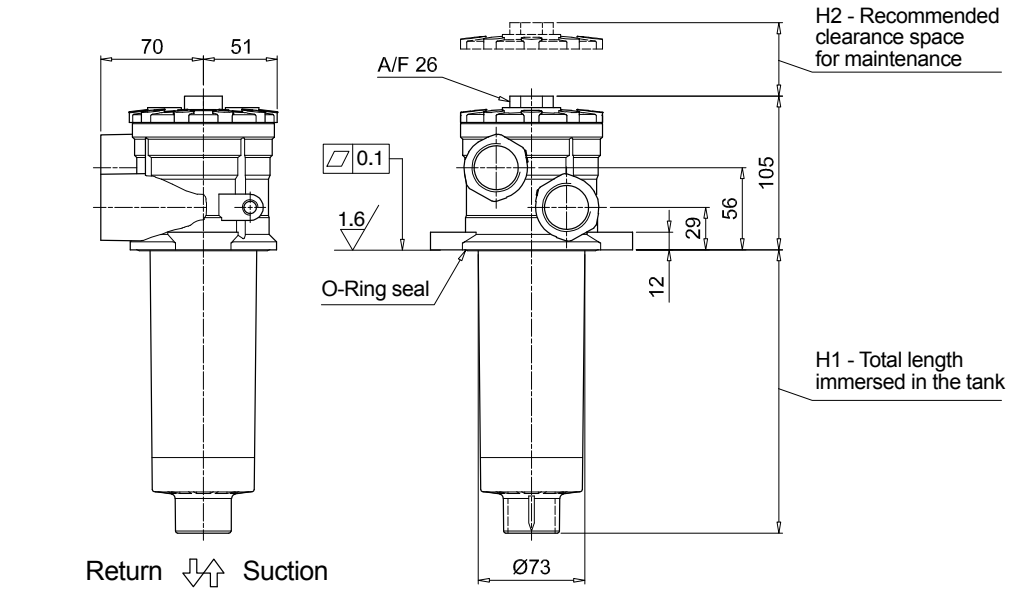

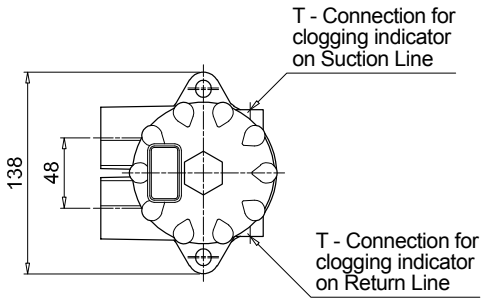

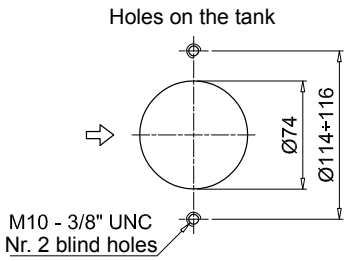

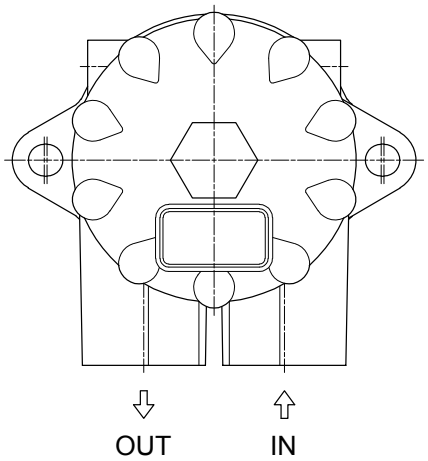

MRSX MRSX165 - MRSX166

Designation & Ordering code

COMPLETE FILTER

Configuration example: MRSX166 | 2 | C | V | G3 | 1 | A10 | S | P01

Series and size

MRSX165 | **MRSX166** Filter element with private spigot

Length

1 | **2** | **3**

Hydraulic diagram configuration - see page 257

	Bypass valve to tank	Bypass valve to OUT
A | **B** | **C** | **D**	•	
E | **F** | **G** | **H**		•
I	•	
M		•

Seals and treatments

A	NBR, O-Ring on head	**B**	NBR, flat seal on head
V	FPM, O-Ring on head	**D**	FPM, flat seal on head

Connections

	IN (size 165)	IN (size 166)	Aux IN	OUT
G1	G 1 1/4”	G 1”	G 1 1/4”	G 1”
G2	1 1/4” NPT	1” NPT	1 1/4” NPT	1” NPT
G3	SAE 20 - 1 5/8” - 12 UN	SAE 16 - 1 5/16” - 12 UN	SAE 20 - 1 5/8” - 12 UN	SAE 16 - 1 5/16” - 12 UN

Aux IN connection

		MRSX 165	MRSX 166
0	Without aux IN connection	•	-
1	With aux IN connection - see previous table	•	•

Filtration rating (filter media)

A10 Inorganic microfiber 10 µm
A16 Inorganic microfiber 16 µm
A25 Inorganic microfiber 25 µm

Valves configuration

Mounting position		A	B	C	D	E	F	G	H	I	M
S	Standard	•	•	•	•	•	•	•	•		
B	Tank side-wall mounting	•	•			•	•			•	•

Execution

P01 MP Filtri standard
Pxx Customized

FILTER ELEMENT

Configuration example: RSX165 | 2 | A10 | V | P01

Element series and size

RSX165 Filter element with private spigot

Element length

1 | **2** | **3**

Filtration rating (filter media)

A10 Inorganic microfiber 10 µm
A16 Inorganic microfiber 16 µm
A25 Inorganic microfiber 25 µm

Seals

A NBR
V FPM

Execution

P01 MP Filtri standard
Pxx Customized

ACCESSORIES

Indicators on Return Line		page
BVA	Axial pressure gauge	278
BVR	Radial pressure gauge	278
BVP	Visual pressure indicator with automatic reset	279
BVQ	Visual pressure indicator with manual reset	279
BEA	Electrical pressure indicator	276
BEM	Electrical pressure indicator	276
BET	Electrical pressure indicator	276-277
BLA	Electrical / visual pressure indicator	277-278

Indicators on Suction Line		page
VVB	Axial vacuum gauge	275
VVS	Radial vacuum gauge	275
VEB	Electrical vacuum indicator	274
VLB	Electrical / visual vacuum indicator	274

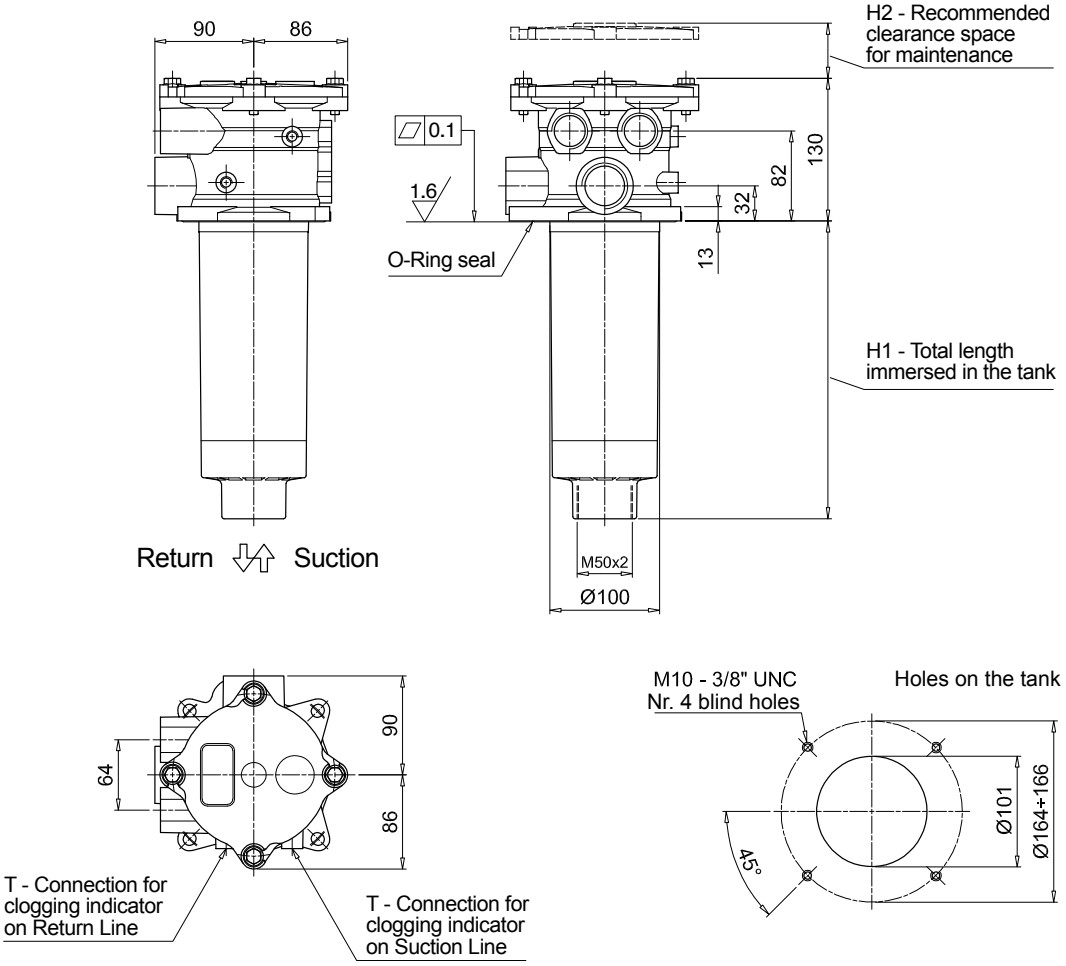

MRSX165		
Filter length	**H1 [mm]**	**H2 [mm]**
1	270	320
2	378	430
3	445	500

Connections	**T**
G1	G 1/8"
G2 - G3	1/8" NPT

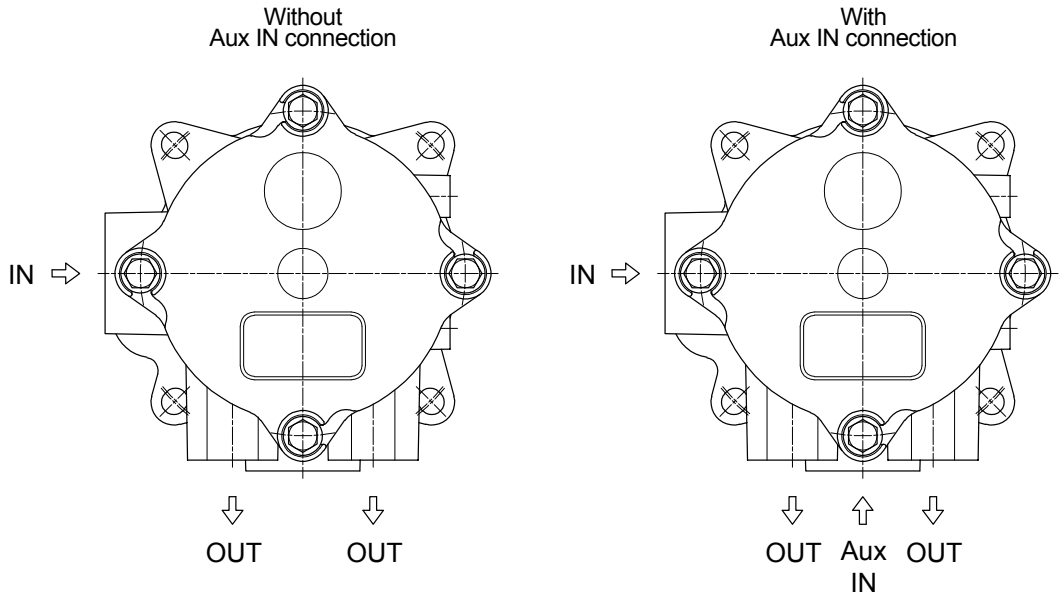

Dimensions

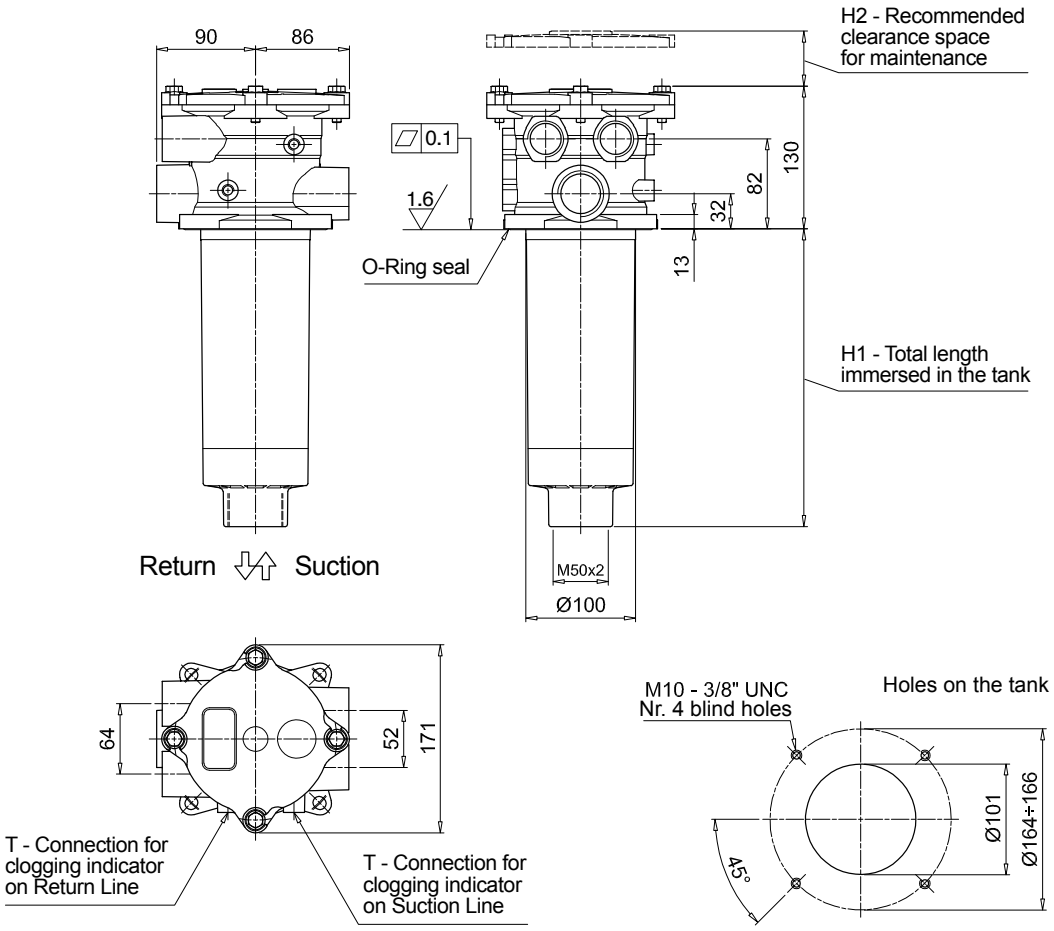

MRSX166		
Filter length	**H1 [mm]**	**H2 [mm]**
1	270	320
2	378	430
3	445	500

Connections	T
G1	G 1/8"
G2 - G3	1/8" NPT

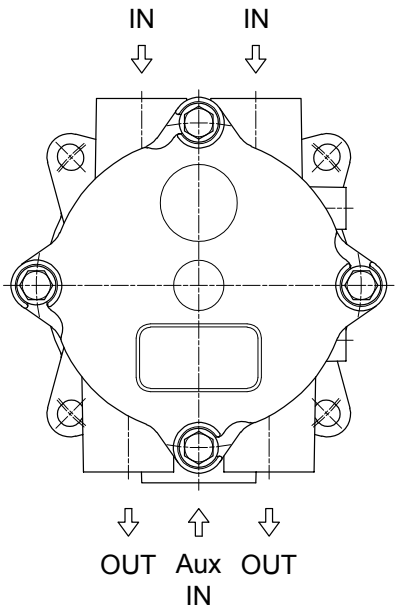

Order number for spare parts

MRSX 116

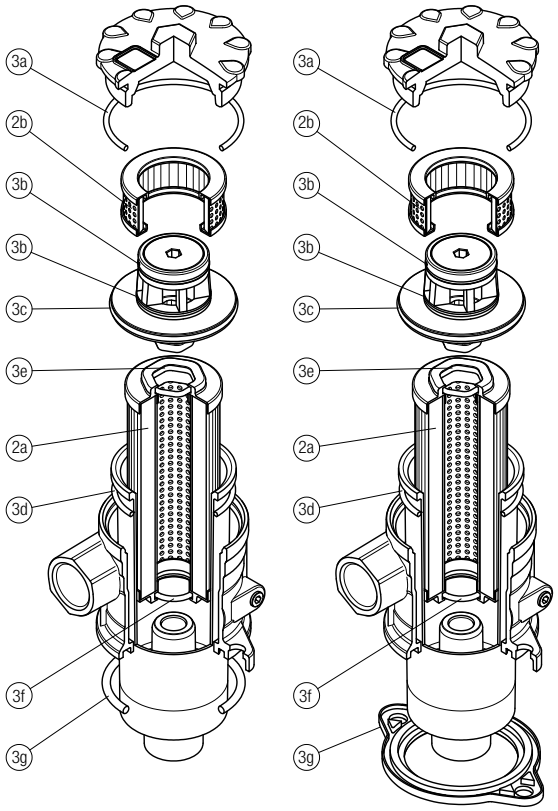

			O-RING SEAL		FLAT SEAL	
	Q.ty: 1 pc.	Q.ty: 1 pc.	Q.ty: 1 pc.		Q.ty: 1 pc.	
Item:	2a	2b	3 (3a ÷ 3g)		3 (3a ÷ 3g)	
Filter series	Filter element	Safety filter element	Seal Kit code number NBR	FPM	Seal Kit code number NBR	FPM
MRSX 116	See order table	S116M60P01	02050617	02050619	02050618	02050620

MRSX 165 - 166

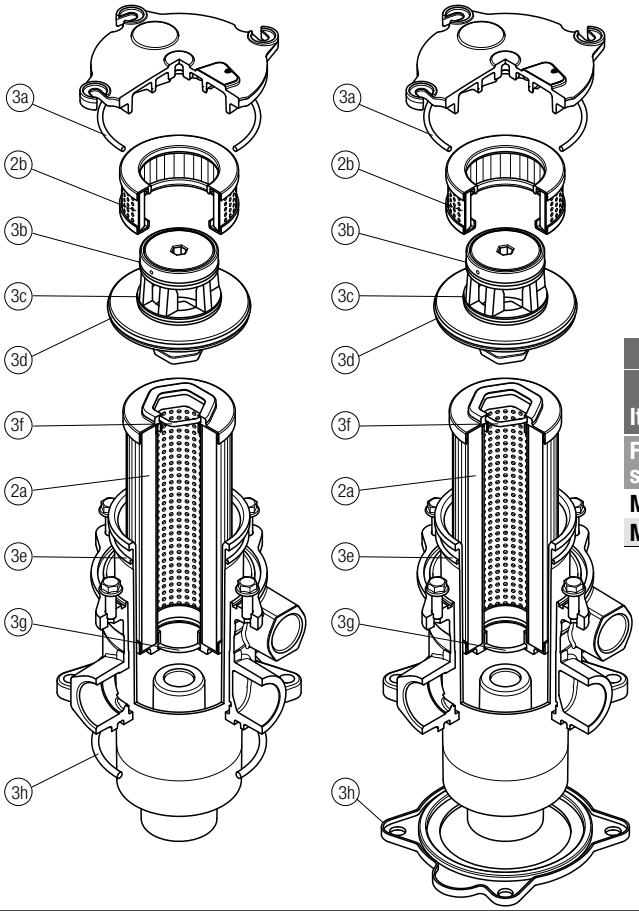

			O-RING SEAL		FLAT SEAL	
	Q.ty: 1 pc.	Q.ty: 1 pc.	Q.ty: 1 pc.		Q.ty: 1 pc.	
Item:	2a	2b	3 (3a ÷ 3h)		3 (3a ÷ 3h)	
Filter series	Filter element	Safety filter element	Seal Kit code number NBR	FPM	Seal Kit code number NBR	FPM
MRSX 165	See order table	S165M60P01	02050627	02050630	02050628	02050631
MRSX 166			02050627	02050630	02050629	02050632

LMP 124 series
MULTIPORT

Maximum working pressure up to 8 MPa (80 bar) - Flow rate up to 200 l/min

LMP 124 GENERAL INFORMATION
MULTIPORT

Description

Return / Suction filter	In-line

Maximum working pressure up to 8 MPa (80 bar)
Flow rate up to 200 l/min

LMP124 is a range of return/suction filters for hydraulic systems with two or more circuits (both open and closed loops). They are able to provide pressurized oil cleaned by fine filtration to the feed pump of the hydrostatic systems.
They are directly connected to the lines of the system through the hydraulic fittings.

Available features:
- Female threaded connections up to 1", for a maximum return flow rate of 200 l/min
- Fine filtration rating, to get a good cleanliness level into the reservoir
- Bypass valve to the tank, to relieve excessive pressure drop across the filter media when the return flow is enough higher than the suction flow
- Bypass valve to the suction line with additional suction filter element, to relieve excessive pressure drop across the filter media when the return flow is not enough higher than the suction flow
- De-pressurization valve, to reduce the pressure inside the filter during the maintenance operations
- Visual, electrical and electronic differential clogging indicators

Common applications:
Mobile machines with hydrostatic systems on board.
(i.e. skid steer loaders, telehandlers, dumpers, road sweepers)

Technical data

Filter housing materials
- Head: Aluminium
- Housing: Cataphoresis - Painted Steel
- Bypass valve: Brass - Aluminium

Pressure
- Test pressure: 12MPa (120 bar)
- Burst pressure: 38 MPa (380 bar)
- Pulse pressure fatigue test: 1 000 000 cycles with pressure from 0 to 80 bar (8 MPa)

Bypass valve
- Opening pressure 250 kPa (2.5 bar) ±10%
- Other opening pressures on request.

Δp element type
- Microfibre filter elements - series N - W: 20 bar
- Fluid flow through the filter element from OUT to IN.

Seals
- Standard NBR series A
- Optional FPM series V

Temperature
From -25 °C to +110 °C

Note
LMP124 filters are provided for vertical mounting

Weights [kg] and volumes [dm³]

Filter series	Weights [kg]					Volumes [dm³]				
	Length	1	2	3	4	Length	1	2	3	4
LMP 124		1.70	1.90	2.20	2.70		0.75	0.81	1.11	1.53

FILTER ASSEMBLY SIZING
Flow rates [l/min]

		Filter element design - N series							
Filter series	Length	A03	A06	A10	A16	A25	M25 M60 M90	P10	P25
LMP 124	1	39	41	58	60	69	99	84	85
	2	47	53	68	69	77	99	90	91
	3	59	61	73	77	86	99	92	93
	4	70	78	84	86	93	100	94	95

Maximum flow rate for a complete return/suction filter with a pressure drop Δp = 1.2 bar.
The reference fluid has a kinematic viscosity of 30 mm^2/s (cSt) and a density of 0.86 kg/dm^3.
For different pressure drop or fluid viscosity we recommend to use our selection software available on www.mpfiltri.com.
You can also calculate the right size using the formulas present on the FILTER SIZING paragraph at the beginning of the full catalogue or at the beginning of the filter family brochure.
Please, contact our Sales Department for further additional information.

Hydraulic symbols - Multiport styles

Multiport	Valves C option	Valves D option	Valves E option	Valves F option

IN - Return
OUT 1 - Tank
OUT 2 - Pump

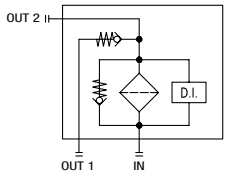

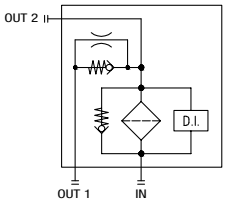

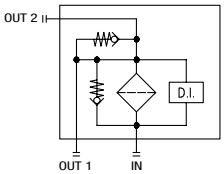

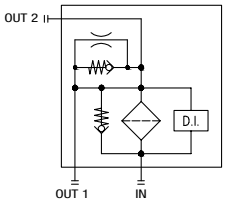

Multiport	Valves G option	Valves H option

IN - Return
OUT 1 - Tank
OUT 2 - Pump

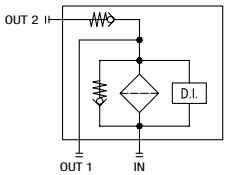

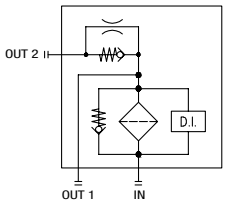

Pressure drop

Filter housings Δp pressure drop

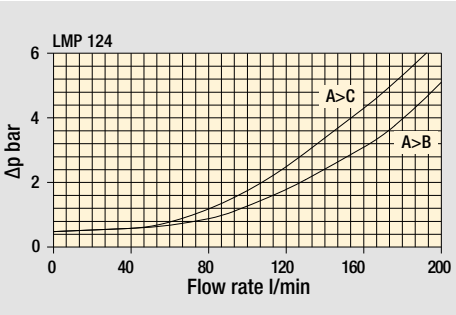

Bypass valve pressure drop

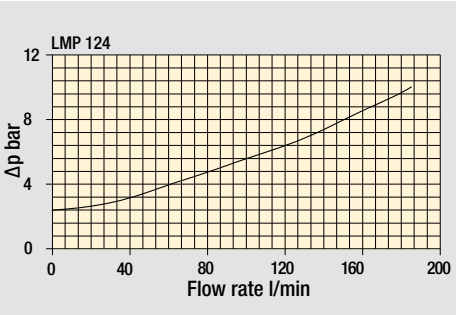

Valves

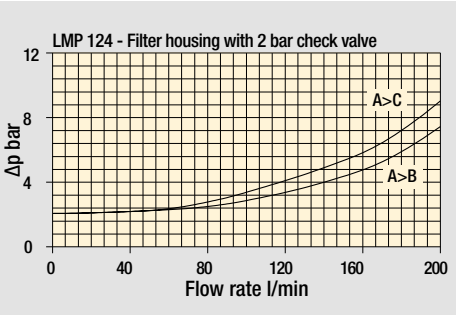

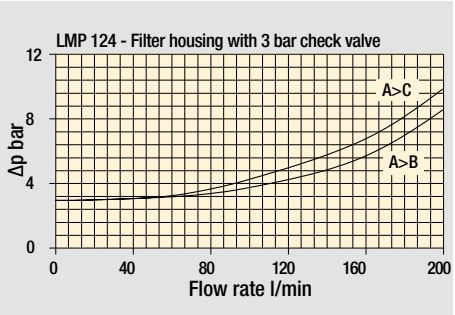

Filter length: **1 - 2 - 3 - 4**

STYLE **C - D - E - F**

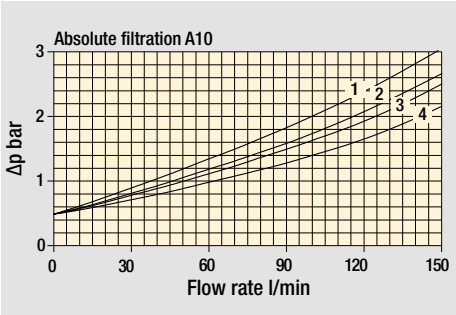

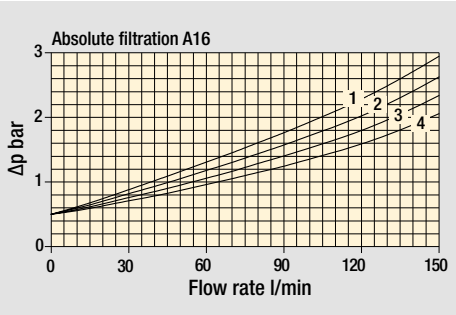

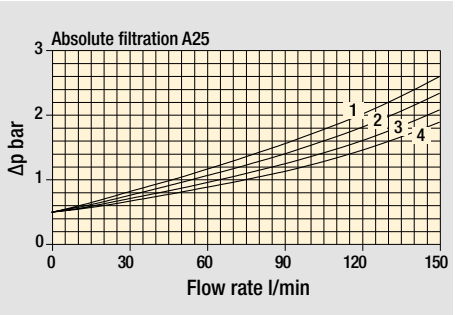

STYLE **G - H**

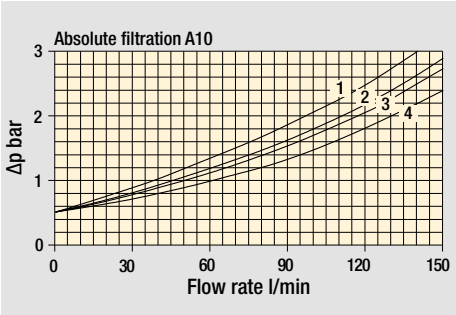

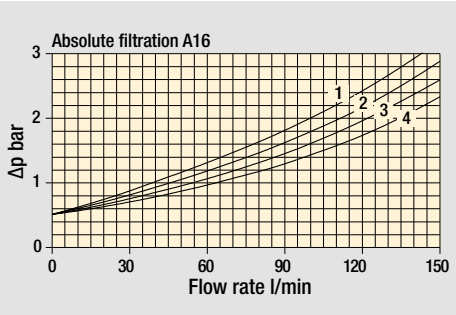

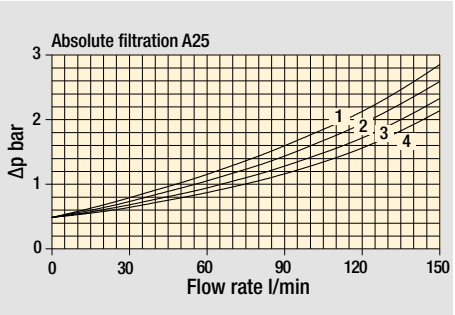

The curves are plotted using mineral oil with density of 0.86 kg/dm^3 in compliance with ISO 3968. Δp varies proportionally with density.

Designation & Ordering code

COMPLETE FILTER

Configuration example: LMP124 | 4 | C | A | F | 1 | A10 | N | P01

Series and size
LMP124

Filter length
1 | 2 | 3 | 4 |

Hydraulic diagram configuration - see page 268
C | D | E | F | G | H |

Seals and treatments		Filtration rating Axx	Mxx	Pxx
A	NBR	•	•	•
V	FPM	•	•	•
W	NBR compatible with fluids HFA-HFB-HFC	•	•	

Connections
B G 1”
F SAE 16 - 1 5/16” - 12 UN

Connection for indicator
1 Without
2 With connection G 1/8” for clogging indicator
3 With connection G 1/4” for clogging indicator
4 With connection for differential indicator

Filtration rating (filter media)

A03	Inorganic microfiber 3 µm	**M25**	Wire mesh 25 µm
A06	Inorganic microfiber 6 µm	**M60**	Wire mesh 60 µm
A10	Inorganic microfiber 10 µm	**M90**	Wire mesh 90 µm
A16	Inorganic microfiber 16 µm	**P10**	Resin impregnated paper 10 µm
A25	Inorganic microfiber 25 µm	**P25**	Resin impregnated paper 25 µm

Element Δp
N 20 bar

Execution
P01 MP Filtri standard
Pxx Customized

FILTER ELEMENT

Configuration example: CU110 | 4 | A10 | A | N | P01

Element series and size
CU110

Element length
1 | 2 | 3 | 4 |

Filtration rating (filter media)

A03	Inorganic microfiber 3 µm	**M25**	Wire mesh 25 µm
A06	Inorganic microfiber 6 µm	**M60**	Wire mesh 60 µm
A10	Inorganic microfiber 10 µm	**M90**	Wire mesh 90 µm
A16	Inorganic microfiber 16 µm	**P10**	Resin impregnated paper 10 µm
A25	Inorganic microfiber 25 µm	**P25**	Resin impregnated paper 25 µm

Seals		Filtration rating Axx	Mxx	Pxx
A	NBR	•	•	•
V	FPM	•	•	•
W	NBR compatible with fluids HFA-HFB-HFC	•	•	

Element Δp
N 20 bar

Execution
P01 MP Filtri standard
Pxx Customized

ACCESSORIES

Indicators on Return Line		page
BVA	Axial pressure gauge	278
BVR	Radial pressure gauge	278
BVP	Visual pressure indicator with automatic reset	279
BVQ	Visual pressure indicator with manual reset	279
BEA	Electrical pressure indicator	276
BEM	Electrical pressure indicator	276
BET	Electrical pressure indicator	276-277
BLA	Electrical / visual pressure indicator	277-278

Differential indicators		page
DEA	Electrical differential indicator	280
DEM	Electrical differential indicator	280-281
DLA	Electrical / visual differential indicator	281-282
DLE	Electrical / visual differential indicator	282
DTA	Electronic differential indicator	283
DVA	Visual differential indicator	283
DVM	Visual differential indicator	283

Additional features		page
T2	Plug	284

LMP 124 MULTIPORT	
Filter length	**H [mm]**
1	182
2	215
3	265
4	365

Connections	R
B	M10
F	3/8" UNC

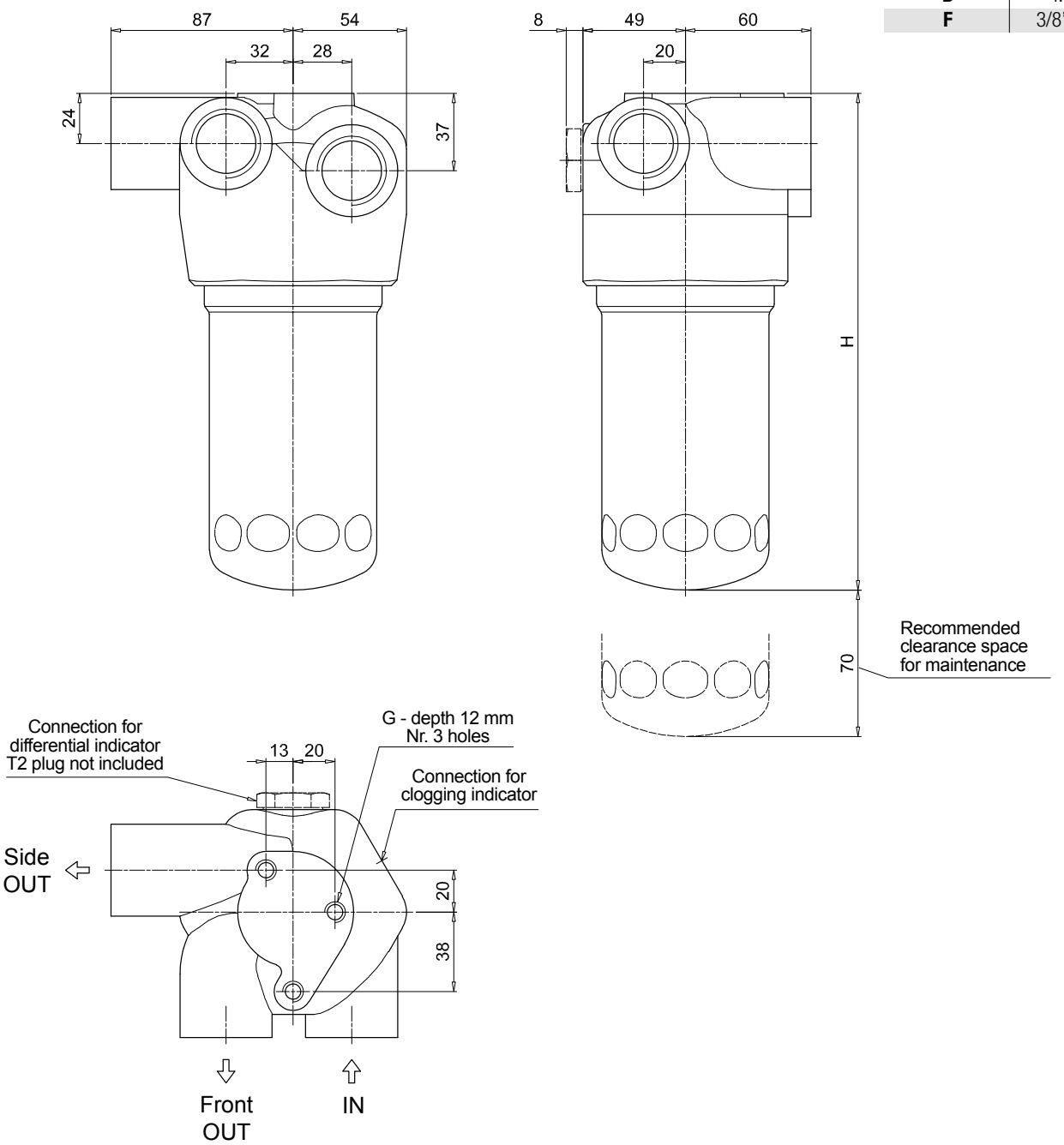

Order number for spare parts

LMP 124 MULTIPORT

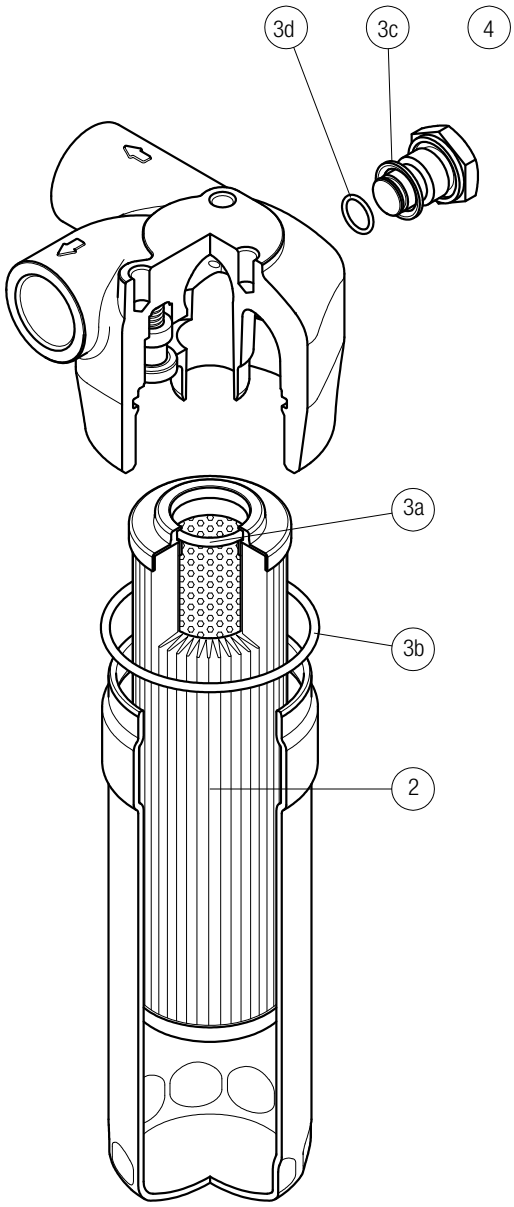

Item:	Q.ty: 1 pc. 2	Q.ty: 1 pc. 3 (3a ÷ 3d)		Q.ty: 1 pc. 4	
Filter series	Filter element	Seal Kit code number NBR	FPM	Indicator connection plug NBR	FPM
LMP 124 MULTIPORT	See order table	02050478	02050479	T2H	T2V

Clogging indicators

Vacuum indicators
Barometric indicators
Differential indicators

Introduction

Filter elements are efficient only if their Dirt Holding Capacity is fully exploited. This is achieved by using filter housings equipped with clogging indicators.
These devices trip when the clogging of the filter element causes an increase in pressure drop across the filter element.
The indicator is set to alarm before the element becomes fully clogged.
MP Filtri can supply indicators of the following designs:

- Vacuum switches and gauges
- Pressure switches and gauges
- Differential pressure indicators

These type of devices can be provided with a visual, electrical or both signals.

Suitable indicator types

VACUUM INDICATORS
Vacuum indicators are used on the Suction line to check the efficiency of the filter element.
They measure the pressure downstream of the filter element.
Standard items are produced with R 1/4" EN 10226 connection.
Available products with R 1/8" EN 10226 to be fitted on MPS series.

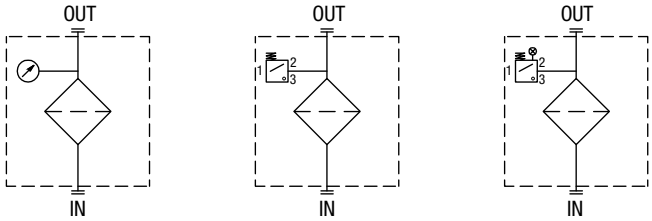

BAROMETRIC INDICATORS
Pressure indicators are used on the Return line to check the efficiency of the filter element.
They measure the pressure upstream of the filter element.
Standard items are produced with R 1/8" EN 10226 connection.

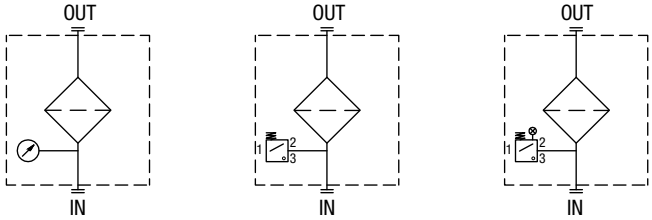

DIFFERENTIAL INDICATORS
Differential indicators are used on the Pressure line to check the efficiency of the filter element.
They measure the pressure upstream and downstream of the filter element (differential pressure).
Standard items are produced with special connection G 1/2" size.
Also available in Stainless Steel models.

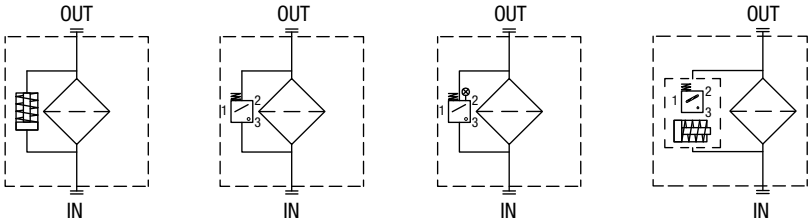

Quick reference guide

	Filter series	Visual indicator	Electrical indicator	Electrical / Visual indicator
Suction line	MRSX 116 - 165 - 166	VVB16P01 VVS16P01	VEB21AA50P01	VLB21AA51P01 VLB21AA52P01 VLB21AA53P01 VLB21AA71P01
Return line	MRSX 116 - 165 - 166 LMP 124 MULTIPORT	BVA25P01 BVR25P01 BVP20HP01 BVQ20HP01	BEA25HA50P01 BEM25HA41P01 BET25HF10P01 BET25HF30P01 BET25HF50P01	BLA25HA51P01 BLA25HA52P01 BLA25HA53P01 BLA25HA71P01

VACUUM INDICATORS

Dimensions

VE*50

Electrical Vacuum Indicator

R	Ordering code
EN 10226 - R1/4”	VE A 21 A A 50 P01
EN 10226 - R1/8”	VE B 21 A A 50 P01

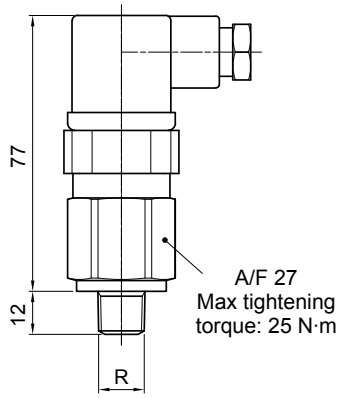

Hydraulic symbol

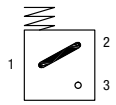

Electrical symbol

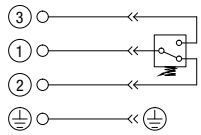

Materials
- Body: Brass
- Base: Black Nylon
- Contacts: Silver
- Seal: NBR

Technical data
- Vacuum setting: -0.21 bar ±10%
- Max working pressure: 10 bar
- Proof pressure: 15 bar
- Working temperature: From -25 °C to +80 °C
- Compatibility with fluids: Mineral oils, Synthetic fluids HFA, HFB, HFC according to ISO 2943
- Degree of protection: IP65 according to EN 60529

Electrical data
- Electrical connection: EN 175301-803
- Resistive load: 5 A / 14 Vdc; 4 A / 30 Vdc; 5 A / 125 Vac; 4 A / 250 Vac
- Available Atex product: II 1GD Ex ia IIC Tx Ex ia IIIC Tx°C X
- CE certification

VL*51 - VL*52 - VL*53

Electrical/Visual Vacuum Indicator

R	Ordering code
EN 10226 - R1/4”	VL A 21 A A xx P01
EN 10226 - R1/8”	VL B 21 A A xx P01

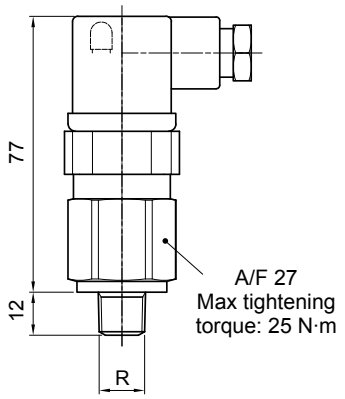

Hydraulic symbol

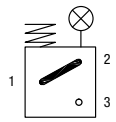

Electrical symbol

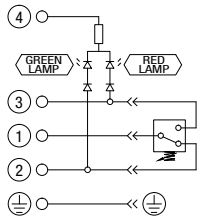

Materials
- Body: Brass
- Base: Transparent Nylon
- Contacts: Brass - Nylon
- Seal: NBR

Technical data
- Vacuum setting: -0.21 bar ±10%
- Max working pressure: 10 bar
- Proof pressure: 15 bar
- Working temperature: From -25 °C to +80 °C
- Compatibility with fluids: Mineral oils, Synthetic fluids HFA, HFB, HFC according to ISO 2943
- Degree of protection: IP65 according to EN 60529

Electrical data
- Electrical connection: EN 175301-803

- Type	51	52	53
- Lamps	24 Vdc	110 Vdc	230 Vac
- Resistive load:	1 A / 24 Vdc	1 A / 110 Vdc	1 A / 230 Vac

VL*71

Electrical/Visual Vacuum Indicator

Connections	Indicator code
EN 10226 - R1/4”	VL A 21 A A 71 P01
EN 10226 - R1/8”	VL B 21 A A 71 P01

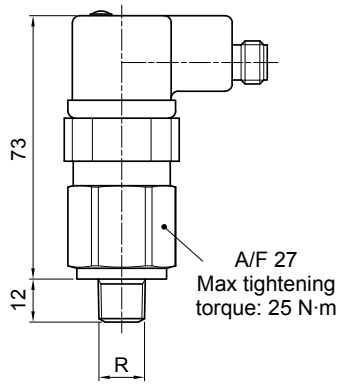

Hydraulic symbol

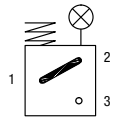

Electrical symbol

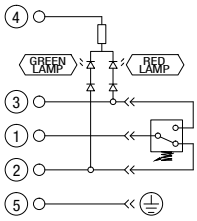

Materials
- Body: Brass
- Base: Black Nylon
- Contacts: Silver
- Seal: NBR

Technical data
- Vacuum setting: -0.21 bar ±10%
- Max working pressure: 10 bar
- Proof pressure: 15 bar
- Working temperature: From -25 °C to +80 °C
- Compatibility with fluids: Mineral oils, Synthetic fluids HFA, HFB, HFC according to ISO 2943
- Degree of protection: IP65 according to EN 60529

Electrical data
- Electrical connection: IEC 61076-2-101 D (M12)
- Lamps 24 Vdc
- Resistive load: 0.4 A / 24 Vdc

VVA - VVB

Axial Vacuum Gauge

R	Ordering code
EN 10226 - R1/4”	VV A 16 P01
EN 10226 - R1/8”	VV B 16 P01

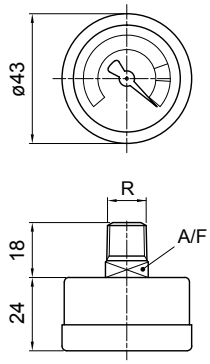

Hydraulic symbol

Dial scale

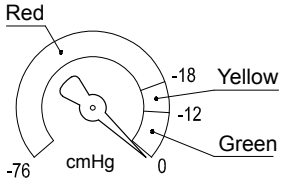

Conversion to SI units

[cmHg]	[bar]
-12	-0.16
-18	-0.24
-76	-1.01

Materials

- Case: Painted Steel
- Window: Transparent plastic
- Dial: Painted Steel
- Pointer: Painted Aluminium
- Pressure connection: Brass
- Pressure element: Bourdon tube Cu-alloy soft soldered

Technical data

- Max working pressure: Static: 7 bar
  Fluctuating: 6 bar
  Short time: 10 bar
- Working temperature: From -40 °C to +60 °C
- Compatibility with fluids: Mineral oils, Synthetic fluids
  HFA, HFB, HFC according to ISO 2943
- Accuracy: Class 2.5 according to EN 13190
- Degree of protection: IP31 according to EN 60529

VVR - VVS

Radial Vacuum Gauge

R	A/F	Ordering code
EN 10226 - R1/4”	14	VV R 16 P01
EN 10226 - R1/8”	11	VV S 16 P01

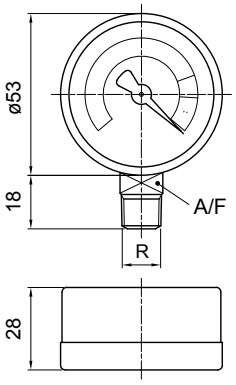

Hydraulic symbol

Dial scale

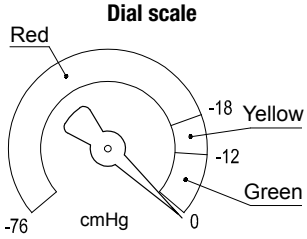

Conversion to SI units

[cmHg]	[bar]
-12	-0.16
-18	-0.24
-76	-1.01

Materials

- Case: Painted Steel
- Window: Transparent plastic
- Dial: Painted Steel
- Pointer: Painted Aluminium
- Pressure connection: Brass
- Pressure element: Bourdon tube Cu-alloy soft soldered

Technical data

- Max working pressure: Static: 7 bar
  Fluctuating: 6 bar
  Short time: 10 bar
- Working temperature: From -40 °C to +60 °C
- Compatibility with fluids: Mineral oils, Synthetic fluids
  HFA, HFB, HFC according to ISO 2943
- Accuracy: Class 2.5 according to EN 13190
- Degree of protection: IP31 according to EN 60529

DESIGNATION & ORDERING CODE

Configuration example 1:	VE	A	21	A	A	50	P01
Configuration example 2:	VL	B	21	A	A	71	P01
Configuration example 3:	VV	R	16				P01

Series

- **VE** Electrical vacuum indicator
- **VL** Electrical/Visual vacuum indicator
- **VV** Vacuum gauge

Type VE - VL

- **A** Connection EN 10226 - R1/4”
- **B** Connection EN 10226 - R1/8”

Type VV

- **A** Axial connection EN 10226 - R1/4”
- **B** Axial connection EN 10226 - R1/8”
- **R** Radial connection EN 10226 - R1/4”
- **S** Radial connection EN 10226 - R1/8”

Vacuum setting	VE	VL	VV
16 -0.16 bar			•
21 -0.21 bar	•	•	

Seals	VE	VL	VV
A NBR	•	•	

Thermostat	VE	VL	VV
A Without	•	•	

Electrical connections	VE	VL	VV
50 Connection EN 175301-803	•		
51 Connection EN 175301-803, transparent base with lamps 24 Vdc		•	
52 Connection EN 175301-803, transparent base with lamps 110 Vdc		•	
53 Connection EN 175301-803, transparent base with lamps 230 Vdc		•	
71 Connection IEC 61076-2-101 D (M12), black base with lamps 24 Vdc		•	

Option

- **P01** MP Filtri standard
- **Pxx** Customized

Dimensions

BEA*50

Electrical Pressure Indicator

Settings	Ordering code
1.5 bar ±10%	BE A 15 H A 50 P01
2.0 bar ±10%	BE A 20 H A 50 P01

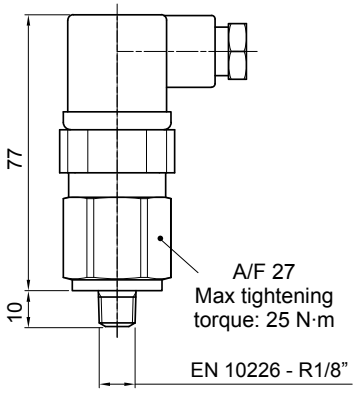

Hydraulic symbol

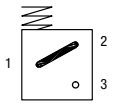

Electrical symbol

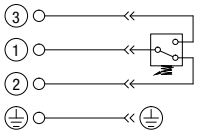

Materials
- Body: Brass
- Base: Black Nylon
- Contacts: Silver
- Seal: HNBR

Technical data
- Max working pressure: 40 bar
- Proof pressure: 60 bar
- Working temperature: From -25 °C to +80 °C
- Compatibility with fluids: Mineral oils, Synthetic fluids HFA, HFB, HFC according to ISO 2943
- Degree of protection: IP65 according to EN 60529

Electrical data
- Electrical connection: EN 175301-803
- Resistive load: 5 A / 14 Vdc; 4 A / 30 Vdc; 5 A / 125 Vac; 4 A / 250 Vac
- Available Atex product: II 1GD Ex ia IIC Tx Ex ia IIIC Tx°C X
- CE certification

BEM*41

Electrical Pressure Indicator

Settings	Ordering code
1.5 bar ±10%	BE M 15 H A 41 P01
2.0 bar ±10%	BE M 20 H A 41 P01

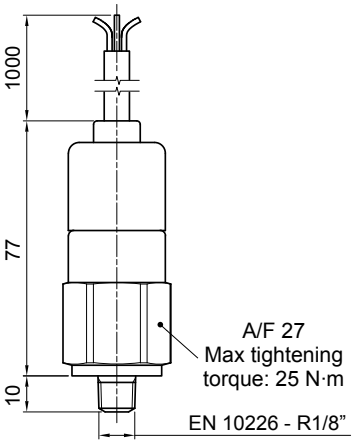

Hydraulic symbol

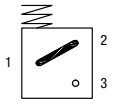

Electrical symbol

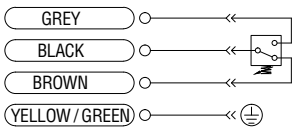

Materials
- Body: Brass
- Base: Black Nylon
- Contacts: Silver
- Seal: HNBR

Technical data
- Max working pressure: 40 bar
- Proof pressure: 60 bar
- Working temperature: From -25 °C to +80 °C
- Compatibility with fluids: Mineral oils, Synthetic fluids HFA, HFB, HFC according to ISO 2943
- Degree of protection: IP67 according to EN 60529

Electrical data
- Electrical connection: Four-core cable
- Resistive load: 5 A / 14 Vdc; 4 A / 30 Vdc; 5 A / 125 Vac; 4 A / 250 Vac
- CE certification

On request this indicator can be provided with main connectors in use for wirings.

BET*10

Electrical Pressure Indicator

Settings	Ordering code
2.0 bar ±10%	BE T 20 H F 10 P01
2.5 bar ±10%	BE T 25 H F 10 P01

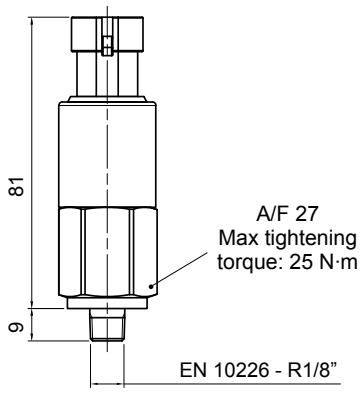

Hydraulic symbol

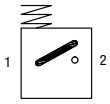

Electrical symbol

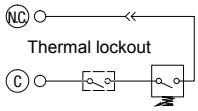

Materials
- Body: Brass
- Base: Black Nylon
- Contacts: Silver
- Seal: HNBR

Technical data
- Max working pressure: 10 bar
- Proof pressure: 15 bar
- Working temperature: From -25 °C to +100 °C
- Compatibility with fluids: Mineral oils, Synthetic fluids HFA, HFB, HFC according to ISO 2943
- Degree of protection: IP65 according to EN 60529

Electrical data
- Electrical connection: AMP Superseal series 1.5
- Resistive load: 0.5 A / 48 Vdc
- Thermostat condition: Open up to 30 °C
- CE certification

BET*30

Electrical Pressure Indicator

Settings	Ordering code
2.0 bar ±10%	BE T 20 H F 30 P01
2.5 bar ±10%	BE T 25 H F 30 P01

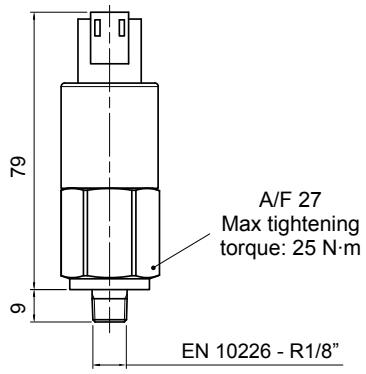

Hydraulic symbol

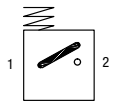

Electrical symbol

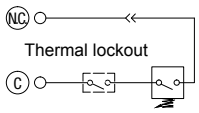

Materials
- Body: Brass
- Base: Black Nylon
- Contacts: Silver
- Seal: HNBR

Technical data
- Max working pressure: 10 bar
- Proof pressure: 15 bar
- Working temperature: From -25 °C to +100 °C
- Compatibility with fluids: Mineral oils, Synthetic fluids HFA, HFB, HFC according to ISO 2943
- Degree of protection: IP65 according to EN 60529

Electrical data
- Electrical connection: Deutsch DT-04-2-P
- Resistive load: 0.5 A / 48 Vdc
- Thermostat condition: Open up to 30 °C
- CE certification

BET*50

Electrical Pressure Indicator

Settings	Ordering code
2.0 bar ±10%	BE T 20 H F 50 P01
2.5 bar ±10%	BE T 25 H F 50 P01

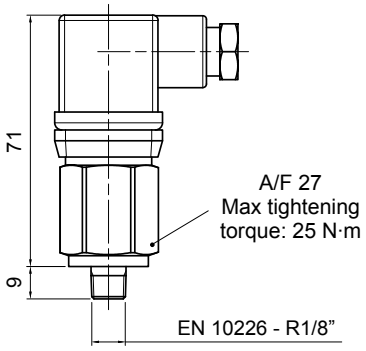

Hydraulic symbol

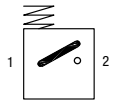

Electrical symbol

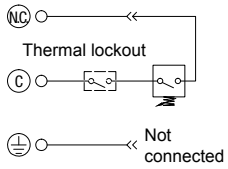

Materials
- Body: Brass
- Base: Black Nylon
- Contacts: Silver
- Seal: HNBR

Technical data
- Max working pressure: 10 bar
- Proof pressure: 15 bar
- Working temperature: From -25 °C to +100 °C
- Compatibility with fluids: Mineral oils, Synthetic fluids HFA, HFB, HFC according to ISO 2943
- Degree of protection: IP65 according to EN 60529

Electrical data
- Electrical connection: EN 175301-803
- Resistive load: 0.5 A / 48 Vdc
- Thermostat condition: Open up to 30 °C
- CE certification

BL*51 - BL*52 - BL*53

Electrical/Visual Pressure Indicator

Settings	Ordering code
1.5 bar ±10%	BL A 15 H A xx P01
2.0 bar ±10%	BL A 20 H A xx P01

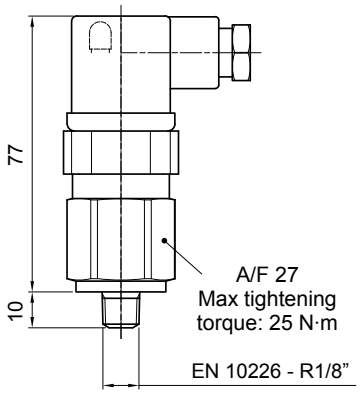

Hydraulic symbol

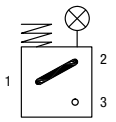

Electrical symbol

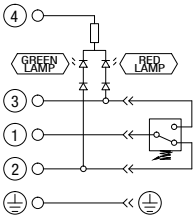

Materials
- Body: Brass
- Base: Transparent Nylon
- Contacts: Silver
- Seal: HNBR

Technical data
- Max working pressure: 40 bar
- Proof pressure: 60 bar
- Working temperature: From -25 °C to +80 °C
- Compatibility with fluids: Mineral oils, Synthetic fluids HFA, HFB, HFC according to ISO 2943
- Degree of protection: IP65 according to EN 60529

Electrical data

- Electrical connection:	EN 175301-803		
- Type	51	52	53
- Lamps	24 Vdc	110 Vdc	230 Vac
- Resistive load:	1 A / 24 Vdc	1 A / 110 Vdc	1 A / 230 Vac

Dimensions

BL*71

Electrical/Visual Pressure Indicator

Settings	Ordering code
1.5 bar ±10%	BL A 15 H A 71 P01
2.0 bar ±10%	BL A 20 H A 71 P01

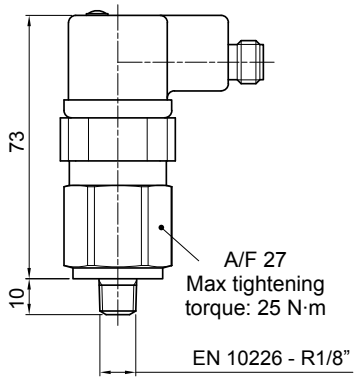

Hydraulic symbol

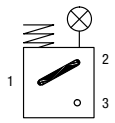

Electrical symbol

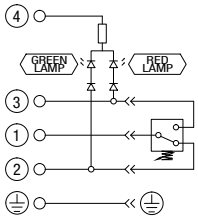

Materials
- Body: Brass
- Base: Black Nylon
- Contacts: Silver
- Seal: HNBR

Technical data
- Max working pressure: 40 bar
- Proof pressure: 60 bar
- Working temperature: From -25 °C to +80 °C
- Compatibility with fluids: Mineral oils, Synthetic fluids HFA, HFB, HFC according to ISO 2943
- Degree of protection: IP65 according to EN 60529

Electrical data
- Electrical connection: IEC 61076-2-101 D (M12)
- Lamps: 24 Vdc
- Resistive load: 0.4 A / 24 Vdc

BVA

Axial Pressure Gauge

Settings	Ordering code
1.4 bar ±10%	BV A 14 P01
2.5 bar ±10%	BV A 25 P01

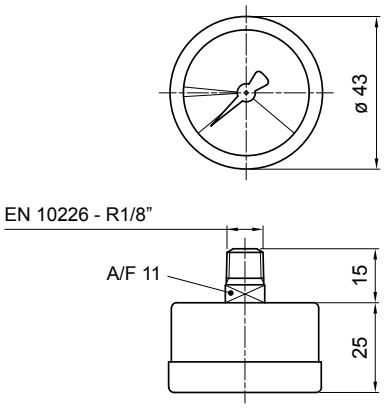

Hydraulic symbol

Dial scale

BV A 14 P01

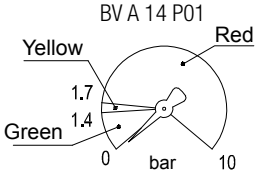

BV A 25 P01

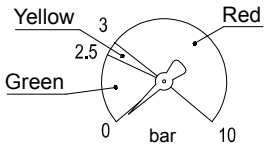

Materials
- Case: Painted Steel
- Window: Transparent plastic
- Dial: Painted Steel
- Pointer: Painted Aluminium
- Pressure connection: Brass
- Pressure element: Bourdon tube Cu-alloy soft soldered

Technical data
- Max working pressure: Static: 7 bar
  Fluctuating: 6 bar
  Short time: 10 bar
- Working temperature: From -40 °C to +60 °C
- Compatibility with fluids: Mineral oils, Synthetic fluids HFA, HFB, HFC according to ISO 2943
- Accuracy: Class 2.5 according to EN 13190
- Degree of protection: IP31 according to EN 60529

BVR

Radial Pressure Gauge

Settings	Ordering code
1.4 bar ±10%	BV R 14 P01
2.5 bar ±10%	BV R 25 P01

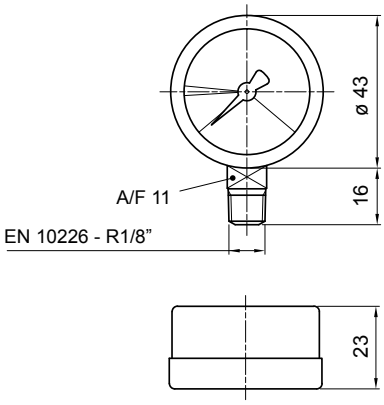

Hydraulic symbol

Dial scale

BV R 14 P01

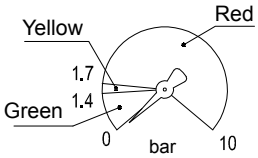

BV R 25 P01

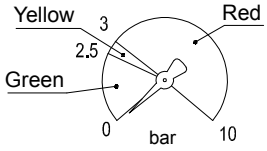

Materials
- Case: Painted Steel
- Window: Transparent plastic
- Dial: Painted Steel
- Pointer: Painted Aluminium
- Pressure connection: Brass
- Pressure element: Bourdon tube Cu-alloy soft soldered

Technical data
- Max working pressure: Static: 7 bar
  Fluctuating: 6 bar
  Short time: 10 bar
- Working temperature: From -40 °C to +60 °C
- Compatibility with fluids: Mineral oils, Synthetic fluids HFA, HFB, HFC according to ISO 2943
- Accuracy: Class 2.5 according to EN 13190
- Degree of protection: IP31 according to EN 60529

BVP - BVQ

Visual Pressure Indicator

Setting	Ordering code
1.5 bar ±10%	BV P 15 H P01
	BV Q 15 H P01
2.0 bar ±10%	BV P 20 H P01
	BV Q 20 H P01

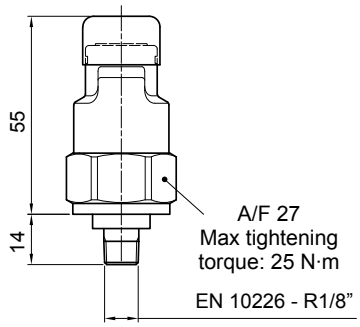

Hydraulic symbol

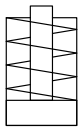

Materials
- Body: Brass
- Cover / internal parts: Nylon
- Caps: VMQ
- Seal: HNBR

Technical data
- Reset: BVP - Automatic reset
  BVQ - Manual reset
- Max working pressure: 10 bar
- Proof pressure: 15 bar
- Working temperature: From -25 °C to +80 °C
- Compatibility with fluids: Mineral oils, Synthetic fluids
  HFA, HFB, HFC according to ISO 2943
- Degree of protection: IP45 according to EN 60529

Signals

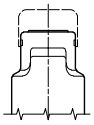

Absence of pressure
(no indicator)

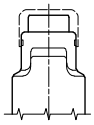

Presence of pressure
(green button rises gradually)

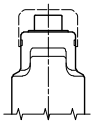

Clogged filter element
(red button risen)

DESIGNATION & ORDERING CODE

Configuration example 1:	BE	M	15	H	A	41	P01
Configuration example 2:	BL	A	20	H	A	71	P01
Configuration example 3:	BV	R	14				P01
Configuration example 4:	BV	P	20	H			P01

Series

BE	Electrical pressure indicator
BL	Electrical/Visual pressure indicator
BV	Visual pressure indicator

Type	BE	BL
A Standard type	•	•
M With wired electrical connection	•	
T With thermal switch	•	

BV	
A	Axial connection pressure gauge
R	Radial connection pressure gauge
P	Visual indicator with automatic reset
Q	Visual indicator with manual reset

Pressure setting	BEA-BEM	BET	BLA	BVA-BVR	BVP-BVQ
14 1.4 bar				•	
15 1.5 bar	•		•		
20 2.0 bar	•	•	•		•
25 2.5 bar		•		•	

Seals	BE	BLA	BVA-BVR	BVP-BVQ
H HNBR	•	•		•

Thermostat	BEA-BEM	BET	BLA	BV
A Without	•		•	
F With		•		

Electrical connections	BEA	BEM	BET	BL	BV
10 Connection AMP Superseal series 1.5			•		
30 Connection Deutsch DT-04-2-P			•		
41 Connection via four-core cable		•			
50 Connection EN 175301-803	•		•		
51 Connection EN 175301-803, transparent base with lamps 24 Vdc				•	
52 Connection EN 175301-803, transparent base with lamps 110 Vdc				•	
53 Connection EN 175301-803, transparent base with lamps 230 Vdc				•	
71 Connection IEC 61076-2-101 D (M12), black base with lamps 24 Vdc				•	

Option	
P01	MP Filtri standard
Pxx	Customized

Dimensions

DEA*50

Electrical Differential Indicator

Settings	Ordering code
2.0 bar ±10%	DE A 20 x A 50 P01

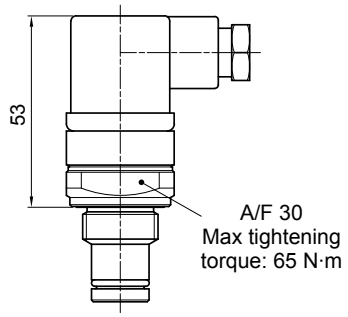

Hydraulic symbol

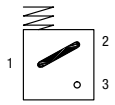

Electrical symbol

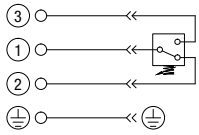

Materials
- Body: Brass
- Base: Black Nylon
- Contacts: Silver
- Seal: HNBR - FPM

Technical data
- Max working pressure: 420 bar
- Proof pressure: 630 bar
- Burst pressure: 1260 bar
- Working temperature: From -25 °C to +110 °C
- Compatibility with fluids: Mineral oils, Synthetic fluids HFA, HFB, HFC according to ISO 2943
- Degree protection: IP66 according to EN 60529 IP69K according to ISO 20653

Electrical data
- Electrical connection: EN 175301-803
- Resistive load: 0.2 A / 115 Vdc

DEM*10

Electrical Differential Indicator

Settings	Ordering code
2.0 bar ±10%	DE M 20 xx 10 P01

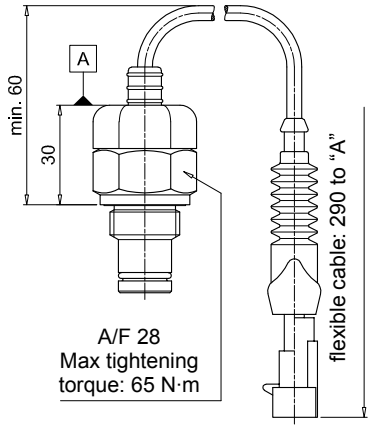

Hydraulic symbol

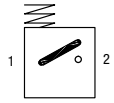

Electrical symbol

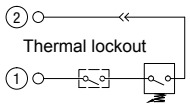

Materials
- Body: Brass
- Base: Black Nylon
- Contacts: Silver
- Seal: HNBR - FPM

Technical data
- Max working pressure: 420 bar
- Proof pressure: 630 bar
- Burst pressure: 1260 bar
- Working temperature: From -25 °C to +110 °C
- Compatibility with fluids: Mineral oils, Synthetic fluids HFA, HFB, HFC according to ISO 2943
- Degree protection: IP66 according to EN 60529

Electrical data
- Electrical connection: AMP Superseal series 1.5
- Resistive load: 0.2 A / 115 Vdc
- Switching type: Normally open contacts (NC on request)
- Thermal lockout: Normally open up to 30 °C (option "F")

DEM*20

Electrical Differential Indicator

Settings	Ordering code
2.0 bar ±10%	DEM20xx20P01

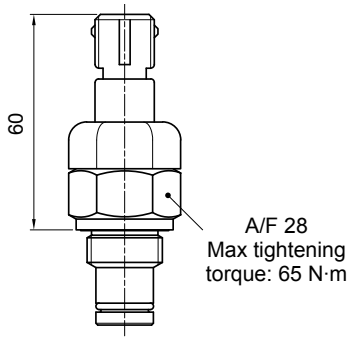

Hydraulic symbol

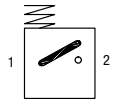

Electrical symbol

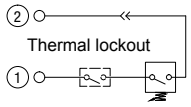

Materials
- Body: Brass
- Base: Black Nylon
- Contacts: Silver
- Seal: HNBR - FPM

Technical data
- Max working pressure: 420 bar
- Proof pressure: 630 bar
- Burst pressure: 1260 bar
- Working temperature: From -25 °C to +110 °C
- Compatibility with fluids: Mineral oils, Synthetic fluids HFA, HFB, HFC according to ISO 2943
- Degree protection: IP66 according to EN 60529

Electrical data
- Electrical connection: AMP Time junior
- Resistive load: 0.2 A / 115 Vdc
- Switching type: Normally open contacts (NC on request)
- Thermal lockout: Normally open up to 30 °C (option "F")

DEM*30

Electrical Differential Indicator

Settings	Ordering code
2.0 bar ±10%	DE M 20 xx 30 P01

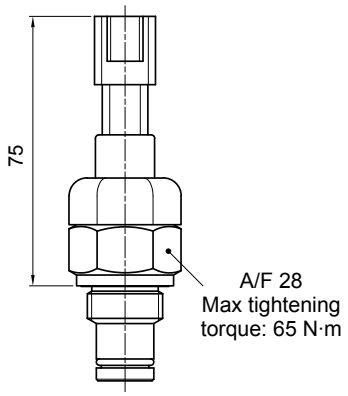

Hydraulic symbol

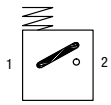

Electrical symbol

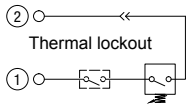

Materials
- Body: Brass
- Base: Black Nylon
- Contacts: Silver
- Seal: HNBR - FPM

Technical data
- Max working pressure: 420 bar
- Proof pressure: 630 bar
- Burst pressure: 1260 bar
- Working temperature: From -25 °C to +110 °C
- Compatibility with fluids: Mineral oils, Synthetic fluids HFA, HFB, HFC according to ISO 2943
- Degree protection: IP66 according to EN 60529

Electrical data
- Electrical connection: Deutsch DT-04-2-P
- Resistive load: 0.2 A / 115 Vdc
- Switching type: Normally open contacts (NC on request)
- Thermal lockout: Normally open up to 30 °C (option “F”)

DEM*35

Electrical Differential Indicator

Settings	Ordering code
2.0 bar ±10%	DE M 20 xx 35 P01

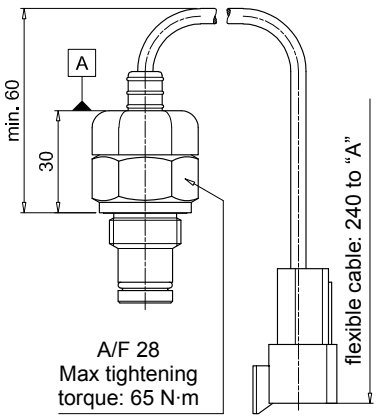

Hydraulic symbol

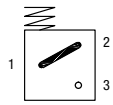

Electrical symbol

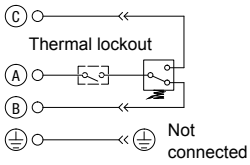

Materials
- Body: Brass
- Base: Black Nylon
- Contacts: Silver
- Seal: HNBR - FPM

Technical data
- Max working pressure: 420 bar
- Proof pressure: 630 bar
- Burst pressure: 1260 bar
- Working temperature: From -25 °C to +110 °C
- Compatibility with fluids: Mineral oils, Synthetic fluids HFA, HFB, HFC according to ISO 2943
- Degree protection: IP66 according to EN 60529

Electrical data
- Electrical connection: Deutsch DT-04-3-P
- Resistive load: 0.2 A / 115 Vdc
- Switching type: SPDT contact
- Thermal lockout: Normally open up to 30 °C (option “F”)

DLA*51 - DLA*52

Electrical/Visual Differential Indicator

Settings	Ordering code
2.0 bar ±10%	DL A 20 x A xx P01

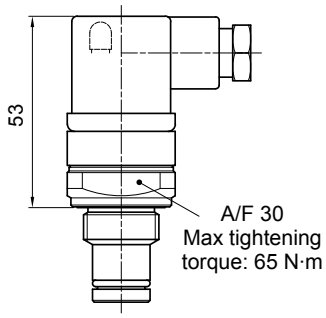

Hydraulic symbol

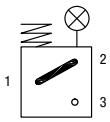

Electrical symbol

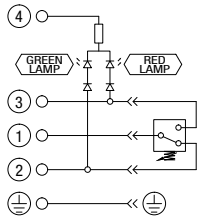

Materials
- Body: Brass
- Base: Transparent Nylon
- Contacts: Silver
- Seal: HNBR - FPM

Technical data
- Max working pressure: 420 bar
- Proof pressure: 630 bar
- Burst pressure: 1260 bar
- Working temperature: From -25 °C to +110 °C
- Compatibility with fluids: Mineral oils, Synthetic fluids HFA, HFB, HFC according to ISO 2943
- Degree protection: IP66 according to EN 60529 IP69K according to ISO 20653

Electrical data

- Electrical connection:	EN 175301-803	
- Type	51	52
- Lamps	24 Vdc	110 Vdc
- Resistive load:	1 A / 24 Vdc	1 A / 110 Vdc

Dimensions

DLA*71

Electrical/Visual Differential Indicator

Settings	Ordering code
2.0 bar ±10%	DL A 20 x A 71 P01

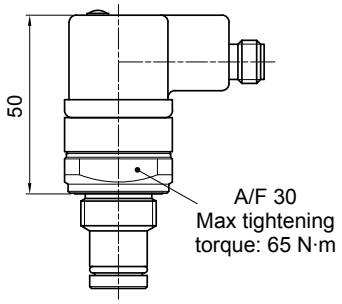

Hydraulic symbol

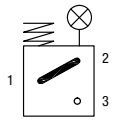

Electrical symbol

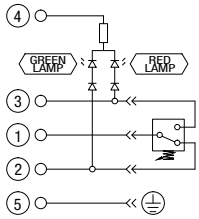

Materials
- Body: Brass
- Base: Black Nylon
- Contacts: Silver
- Seal: HNBR - FPM

Technical data
- Max working pressure: 420 bar
- Proof pressure: 630 bar
- Burst pressure: 1260 bar
- Working temperature: From -25 °C to +110 °C
- Compatibility with fluids: Mineral oils, Synthetic fluids HFA, HFB, HFC according to ISO 2943
- Degree protection: IP65 according to EN 60529 IP69K according to ISO 20653

Electrical data
- Electrical connection: IEC 61076-2-101 D (M12)
- Lamps 24 Vdc
- Resistive load: 0.4 A / 24 Vdc

DLE*A50

Electrical/Visual Differential Indicator

Settings	Ordering code
2.0 bar ±10%	DL E 20 x A 50 P01

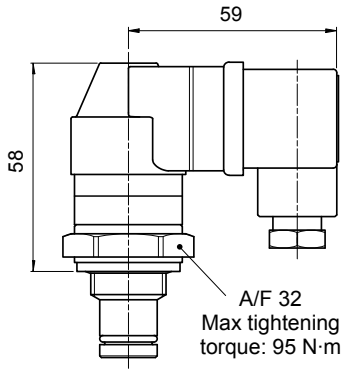

Hydraulic symbol

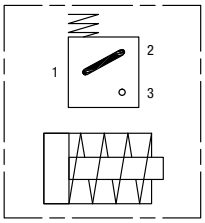

Electrical symbol

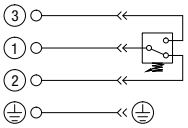

Materials
- Body: Brass
- Base: Black Nylon
- Contacts: Silver
- Seal: HNBR - FPM

Technical data
- Max working pressure: 420 bar
- Proof pressure: 630 bar
- Burst pressure: 1260 bar
- Working temperature: From -25 °C to +110 °C
- Compatibility with fluids: Mineral oils, Synthetic fluids HFA, HFB, HFC according to ISO 2943
- Degree protection: IP65 according to EN 60529

Electrical data
- Electrical connections: EN 175301-803
- Resistive load: 5 A / 250 Vac
- Available the connector with lamps

DLE*F50

Electrical/Visual Differential Indicator

Settings	Ordering code
2.0 bar ±10%	DL E 20 x F 50 P01

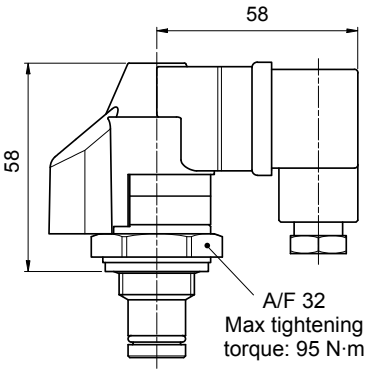

Hydraulic symbol

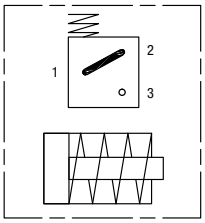

Electrical symbol

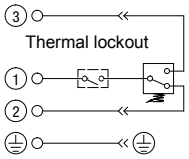

Materials
- Body: Brass
- Base: Black Nylon
- Contacts: Silver
- Seal: HNBR - FPM

Technical data
- Max working pressure: 420 bar
- Proof pressure: 630 bar
- Burst pressure: 1260 bar
- Working temperature: From -25 °C to +110 °C
- Compatibility with fluids: Mineral oils, Synthetic fluids HFA, HFB, HFC according to ISO 2943
- Degree protection: IP65 according to EN 60529

Electrical data
- Electrical connections: EN 175301-803
- Resistive load: 5 A / 250 Vac
- Thermal lockout setting: +30 °C

DTA*70

Electronic Differential Indicator

Settings	Ordering code
2.0 bar ±10%	DT A 20 x x 70 P01

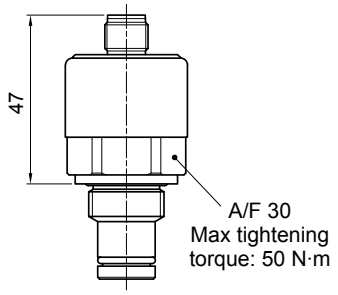

Hydraulic symbol

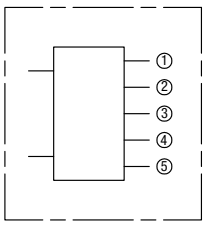

Electrical symbol

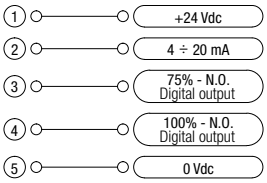

Materials
- Body: Brass
- Internal parts: Brass - Nylon
- Contacts: Silver
- Seal: HNBR - FPM

Industry 4.0 READY

Technical data
- Max working pressure: 420 bar
- Proof pressure: 630 bar
- Burst pressure: 1260 bar
- Compatibility with fluids: Mineral oils, Synthetic fluids HFA, HFB, HFC according to ISO 2943
- Degree protection: IP67 according to EN 60529

Electrical data
- Electrical connection: IEC 61076-2-101 D (M12)
- Power supply: 24 Vdc
- Analogue output: From 4 to 20 mA
- Thermal lockout: 30 °C (all output signals stalled up to 30 °C)

DVA

Visual Differential Indicator

Settings	Ordering code
2.0 bar ±10%	DV A 20 x P01

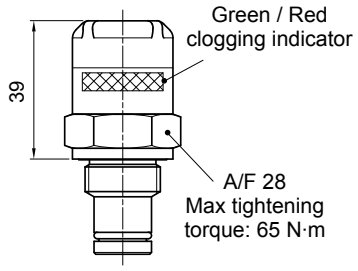

Hydraulic symbol

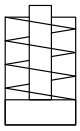

Materials
- Body: Brass
- Internal parts: Brass - Nylon
- Contacts: Silver
- Seal: HNBR - FPM

Technical data
- Reset: Automatic reset
- Max working pressure: 420 bar
- Proof pressure: 630 bar
- Burst pressure: 1260 bar
- Working temperature: From -25 °C to +110 °C
- Compatibility with fluids: Mineral oils, Synthetic fluids HFA, HFB, HFC according to ISO 2943
- Degree protection: IP65 according to EN 60529

DVM

Visual Differential Indicator

Settings	Ordering code
2.0 bar ±10%	DV M 20 x P01

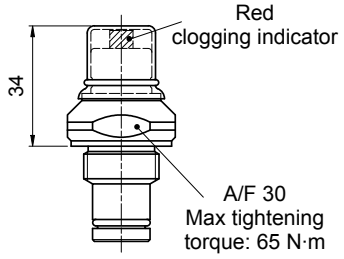

Hydraulic symbol

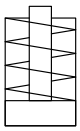

Materials
- Body: Brass
- Internal parts: Brass - Nylon
- Contacts: Silver
- Seal: HNBR - FPM

Technical data
- Reset: Manual reset
- Max working pressure: 420 bar
- Proof pressure: 630 bar
- Burst pressure: 1260 bar
- Working temperature: From -25 °C to +110 °C
- Compatibility with fluids: Mineral oils, Synthetic fluids HFA, HFB, HFC according to ISO 2943
- Degree protection: IP65 according to EN 60529

Dimensions

T2

Indicator plug

Seal	Ordering code
HNBR	T2 H
FPM	T2 V

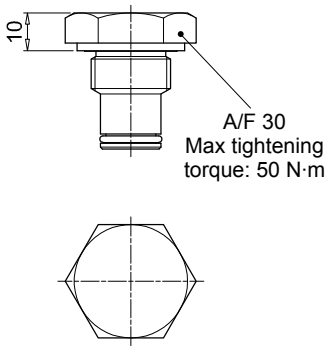

Materials

- Body: Phosphatized steel
- Seal: HNBR / FPM

DESIGNATION & ORDERING CODE - DIFFERENTIAL INDICATORS

Configuration example 1:	DE	M	20	H	F	50	P01
Configuration example 2:	DL	E	20	V	A	71	P01
Configuration example 3:	DT	A	20	H	F	70	P01
Configuration example 4:	DV	M	20	V			P01

Series

- **DE** Electrical differential indicator
- **DL** Electrical/Visual differential indicator
- **DT** Electronic differential indicator
- **DV** Visual differential indicator

Type	DE	DL	DT	DV
A Standard type	•	•	•	**A** With automatic reset
M With wired electrical connection	•			**M** With manual reset
E For high power supply		•		

Pressure setting

- **20** 2.0 bar

Seals

- **H** HNBR
- **V** FPM

Thermostat	DEA	DEM	DLA	DLE	DT	DV
A Without	•	•	•	•		
F With thermostat		•		•	•	

Electrical connections	DEA	DEM	DLA	DLE	DT	DV
10 Connection AMP Superseal series 1.5		•				
20 Connection AMP Timer Junior		•				
30 Connection Deutsch DT-04-2-P		•				
35 Connection Deutsch DT-04-3-P		•				
50 Connection EN 175301-803	•			•		
51 Connection EN 175301-803, transparent base with lamps 24 Vdc			•			
52 Connection EN 175301-803, transparent base with lamps 110 Vdc			•			
70 Connection IEC 61076-2-101 D (M12)					•	
71 Connection IEC 61076-2-101 D (M12), black base with lamps 24 Vdc			•			

Option

- **P01** MP Filtri standard
- **Pxx** Customized

DESIGNATION & ORDERING CODE - DIFFERENTIAL INDICATOR PLUG

Configuration example	T2	H

Series

- **T2** Indicator plug

Seals

- **H** HNBR
- **V** FPM

Clogging indicators are devices that check the life time of the filter elements. They measure the pressure drop through the filter element directly connected to the filter housing.
These devices trip when the clogging of the filter element causes a pressure drop increasing across the filter element.
Filter elements are efficient only if their Dirt Holding Capacity is fully exploited. This is achieved by using filter housings equipped with clogging indicators. The indicator is set to alarm before the element becomes fully clogged.

MP Filtri can supply indicators of the following designs:

- **Vacuum switches and gauges**
- **Pressure switches and gauges**
- **Differential pressure indicators**

These type of devices can be provided with a visual, electrical or both signals. The electronic differential pressure clogging indicator is also available. It provides both analogical 4-20 mA output and digital warning (75% of clogging) and alarm (clogging) outputs.

Clogging Indicators

Clogging indicators

Suitable indicator types

VACUUM INDICATORS
Vacuum indicators are used on the Suction line to check the efficiency of the filter element.
They measure the pressure downstream of the filter element.
Standard items are produced with R 1/4" EN 10226 connection.
Available products with R 1/8" EN 10226 to be fitted on MPS series.

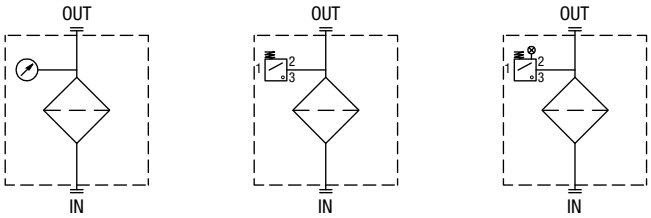

BAROMETRIC INDICATORS
Pressure indicators are used on the Return line to check the efficiency of the filter element.
They measure the pressure upstream of the filter element.
Standard items are produced with R 1/8" EN 10226 connection.

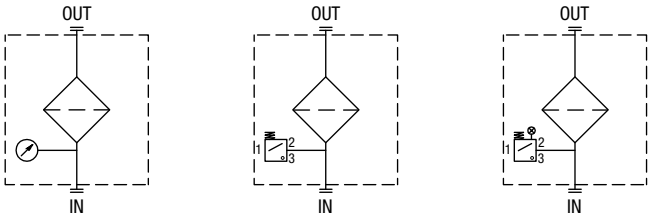

DIFFERENTIAL INDICATORS
Differential indicators are used on the Pressure line to check the efficiency of the filter element.
They measure the pressure upstream and downstream of the filter element (differential pressure).
Standard items are produced with special connection G 1/2" size.
Also available in Stainless Steel models.

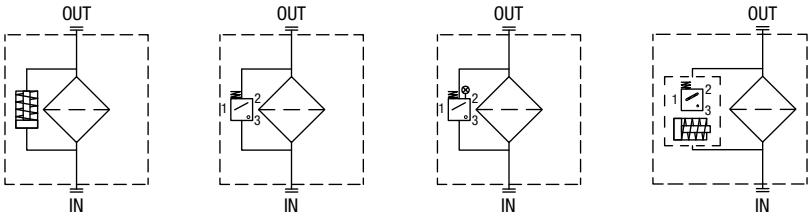

Filter family	Filter series		Electrical indicator	Electrical / Visual indicator	Electronic indicator	Visual indicator
SUCTION FILTERS	ELIXIR® SFEX060-080-110-160		VEB21AA50P01	VLB21AA51P01 VLB21AA52P01 VLB21AA53P01 VLB21AA71P01		VVB16P01 VVS16P01
	SF2 250 - 350 SF2 500 - 501 - 503 - 504 - 505 SF2 510 - 535 - 540		VEA21AA50P01	VLA21AA51P01 VLA21AA52P01 VLA21AA53P01 VLA21AA71P01		VVA16P01 VVR16P01
RETURN FILTERS	With bypass valve	ELIXIR® RFEX060-080-110-160	BEA15HA50P01 BEM15HA41P01	BLA15HA51P01 BLA15HA52P01 BLA15HA53P01 BLA15HA71P01		BVA14P01 BVR14P01 BVP15HP01 BVQ15HP01
	Without bypass valve	ELIXIR® RFEX060-080-110-160	BEA20HA50P01 BEM20HA41P01	BLA20HA51P01 BLA20HA52P01 BLA20HA53P01 BLA20HA71P01		BVA25P01 BVR25P01 BVP20HP01 BVQ20HP01
	With bypass valve	MPFX-MPTX-MPF-MPT - bypass 1.75 bar MPH - bypass 1.75 bar RF2250 - RF2350 - bypass 1.75 bar	BEA15HA50P01 BEM15HA41P01	BLA15HA51P01 BLA15HA52P01 BLA15HA53P01 BLA15HA71P01		BVA14P01 BVR14P01 BVP15HP01 BVQ15HP01
	With bypass valve	MPFX-MPTX-MPF-MPT - bypass 3 bar MPH - bypass 2.5 bar FRI 255 RF2250 - RF2350 - bypass 3 bar	BEA20HA50P01 BEM20HA41P01	BLA20HA51P01 BLA20HA52P01 BLA20HA53P01 BLA20HA71P01		BVA25P01 BVR25P01 BVP20HP01 BVQ20HP01
	MPLX FRI 025 - 040 - 100 - 250 - 630 - 850		DEA20xA50P01 DEM20xA10P01 DEM20xA20P01 DEM20xA30P01 DEM20xA35P01	DLA20xA51P01 DLA20xA52P01 DLA20xA71P01 DLE20xA50P01 DLE20xF50P01	DTA20xF70P01	DVA20xP01 DVM20xP01
RETURN / SUCTION FILTERS	Suction line	MRSX 116 - 165 - 166	VEB21AA50P01	VLB21AA51P01 VLB21AA52P01 VLB21AA53P01 VLB21AA71P01		VVB16P01 VVS16P01
	Return line	MRSX 116 - 165 - 166 LMP 124 MULTIPORT	BEA25HA50P01 BEM25HA41P01 BET25HF10P01 BET25HF30P01 BET25HF50P01	BLA25HA51P01 BLA25HA52P01 BLA25HA53P01 BLA25HA71P01		BVA25P01 BVR25P01 BVP20HP01 BVQ20HP01
SPIN-ON FILTERS	Suction line	MPS 050 - 070 - 100 - 150 MPS 200 - 250 - 300 - 350	VEB21AA50P01	VLB21AA51P01 VLB21AA52P01 VLB21AA53P01 VLB21AA71P01		VVB16P01 VVS16P01
	Return line	MPS 050 - 070 - 100 - 150 MPS 200 - 250 - 300 - 350	BEA15HA50P01 BEM15HA41P01	BLA15HA51P01 BLA15HA52P01 BLA15HA53P01 BLA15HA71P01		BVA14P01 BVR14P01 BVP20HP01 BVQ20HP01
	In-line	MPS 051 - 071 - 101 - 151 MPS 301 - 351 MSH 050 - 070 - 100 - 150	DEA12xA50P01 DEM12xAxxP01	DLA12xA51P01 DLA12xA52P01 DLA12xA71P01 DLE12xA50P01 DLE12xF50P01 DLE20xF50P01 DLE20xF50P01	DTA12xA70P01 DTA12xF70P01 DTA20xA70P01 DTA20xF70P01	DVA12xP01 DVM12xP01

QUICK REFERENCE GUIDE

Filter family	Filter series		Electrical indicator	Electrical / Visual indicator	Electronic indicator	Visual indicator	Hazardous area electronic indicator Ex
LOW & MEDIUM PRESSURE FILTERS	With bypass valve	ELIXIR® LFEX060-080-110-160	DES25HA10P01 DES25HA30P01 DES25HA80P01			DVS25HP01	
	Without bypass valve	ELIXIR® LFEX060-080-110-160	DES40HA10P01 DES40HA30P01 DES40HA80P01			DVS40HP01	
	With bypass valve	LMP 110 - 112 - 116 - 118 - 119 MULTIPORT LMP 120 - 122 - 123 MULTIPORT LMP 210 - 211 - LDP LMP 400 - 401 & 430 - 431 LMP 900 - 901 LMP 902 - 903 LMP 950 - 951 LMP 952 - 953 - 954 LMD 211 - 400 - 401 - 431 - 951 - LDD	DEA20xA50P01 DEM20xAxxP01	DLA20xA51P01 DLA20xA52P01 DLA20xA71P01 DLE20xA50P01 DLE20xF50P01	DTA20xF70P01	DVS25HP01 DVS40HP01 DVA20xP01 DVM20xP01	
	Without bypass valve	LMP 110 - 112 - 116 - 118 - 119 MULTIPORT LMP 120 - 122 - 123 MULTIPORT LMP 210 - 211 - LDP LMP 400 - 401 & 430 - 431 LMP 900 - 901 LMP 902 - 903 LMP 950 - 951 LMP 952 - 953 - 954 LMD 211 - 400 - 401 - 431 - 951 - LDD	DEA50xA50P01 DEM50xAxxP01	DLA50xA51P01 DLA50xA52P01 DLA50xA71P01 DLE50xA50P01 DLE50xF50P01	DTA50xF70P01	DVA50xP01 DVM50xP01	
HIGH PRESSURE FILTERS	With bypass valve	FMP 039 - 065 - 135 - 320 FHP 010 - 011 - 065 - 135 - 350 - 500 FMM 050 - 150 FHA 051 FHM 006 - 007 - 010 - 050 - 065 - 135 - 320 - 500 FHB 050 - 065 - 135 - 320 FHF 325 FHD 021 - 051 - 326 - 333	DEA50xA50P01 DEM50xAxxP01	DLA50xA51P01 DLA50xA52P01 DLA50xA71P01 DLE50xA50P01 DLE50xF50P01	DTA50xF70P01	DVA50xP01 DVM50xP01	DEH50xA48P01 DEH50xA49P01 DEH50xA70P01 DEH70xA48P01 DEH70xA49P01 DEH70xA70P01
	Without bypass valve	FMP 039 - 065 - 135 - 320 FHP 010 - 011 - 065 - 135 - 350 - 500 FMM 050 - 150 FHA 051 FHM 006 - 007 - 010 - 050 - 065 - 135 - 320 - 500 FHB 050 - 065 - 135 - 320 FHF 325 FHD 021 - 051 - 326 - 333	DEA70xA50P01 DEM70xAxxP01 DEA95xA50P01 DEM95xAxxP01	DLA70xA51P01 DLA70xA52P01 DLA70xA71P01 DLE70xA50P01 DLE70xF50P01 DLA95xA51P01 DLA95xA52P01 DLE95xA50P01 DLE95xF50P01	DTA70xF70P01 DTA95xF70P01	DVA70xP01 DVM70xP01 DVA95xP01 DVM95xP01	DEH50xA48P01 DEH50xA49P01 DEH50xA70P01 DEH70xA48P01 DEH70xA49P01 DEH70xA70P01
STAINLESS STEEL HIGH PRESSURE FILTERS	With bypass valve	FZH 010 - 011 - 039 FZP 039 - 136 FZX 011 FZB 039 FZM 039 FZD 051	DEX50xA50P01	DLX50xA51P01 DLX50xA52P01		DVX50xP01 DVY50xP01	DEH50xA48P01 DEH50xA49P01 DEH50xA70P01 DEH70xA48P01 DEH70xA49P01 DEH70xA70P01
	Without bypass valve	FZH 010 - 011 - 039 FZP 039 - 136 FZB 039 FZM 039 FZD 010 - 021 - 051	DEX70xA50P01 DEX95xA50P01	DLX70xA51P01 DLX70xA52P01 DLX95xA51P01		DVX70xP01 DVY70xP01 DVX95xP01 DVY95xP01	DEH50xA48P01 DEH50xA49P01 DEH50xA70P01 DEH70xA48P01 DEH70xA49P01 DEH70xA70P01

All data, details and words contained in this publication are provided for information purposes only.
MP Filtri reserves the right to make modifications to the models and versions of the described products at any time for both technical and / or commercial reasons.
The colors and the pictures of the products are purely indicative.
Any reproduction, partial or total, of this document is strictly forbidden.
All rights are strictly reserved.

WORLDWIDE NETWORK

HEADQUARTERS

MP Filtri S.p.A.
Pessano con Bornago
Milano - Italy
+39 02 957031
sales@mpfiltri.it

BRANCH OFFICES

ITALFILTRI LLC
Moscow - Russia
+7 (495) 220 94 60
mpfiltrirussia@yahoo.com

MP Filtri Canada Inc.
Concord - Ontario - Canada
+1 905 303 1369
sales@mpfiltricanada.com

MP Filtri France SAS
Villeneuve la Garenne
France
+33 (0)1 40 86 47 00
sales@mpfiltrifrance.com

MP Filtri Germany GmbH
St. Ingbert - Germany
+49 (0) 6894 95652-0
sales@mpfiltri.de

MP Filtri India Pvt. Ltd.
Bangalore - India
+91 80 4147 7444 / +91 80 4146 1444
sales@mpfiltri.co.in

MP Filtri (Shanghai) Co., Ltd.
Shanghai - Minhang District - China
+86 21 58919916 116
sales@mpfiltrishanghai.com

MP Filtri U.K. Ltd.
Bourton on the Water
Gloucestershire - United Kingdom
+44 (0) 1451 822 522
sales@mpfiltri.co.uk

MP Filtri U.S.A. Inc.
Quakertown, PA - U.S.A.
+1 215 529 1300
sales@mpfiltriusa.com

PASSION TO PERFORM

mpfiltri.com

CMPEN001G
EN - Rev. 10-2020