HYDRAULIC FILTRATION
PRODUCTS

RETURN FILTERS

PASSION TO PERFORM

MPFILTRI®

A WORLDWIDE LEADER IN THE FIELD OF HYDRAULIC FILTRATION EQUIPMENT.

Our company started life in 1964, when Bruno Pasotto decided to attempt to cater for the requests of a market still to be fully explored, with the study, design, development, production and marketing of a vast range of filters for hydraulic equipment, capable of satisfying the needs of manufacturers in all sectors. The quality of our products, our extreme competitiveness compared with major international producers and our constant activities of research, design and development has made us a worldwide leader in the field of hydraulic circuit filtering.
Present for over 50 years in the market, we have played a truly decisive role in defining our sector, and by now we are a group capable of controlling our entire chain of production, monitoring all manufacturing processes to guarantee superior quality standards and to provide concrete solutions for the rapidly evolving needs of customers and the market.

MARKET **LEADER**

Our work is based on a skillful interaction between advanced technology and fine workmanship, **customizing products according to specific market requests**, focusing strongly on innovation and quality, and following every step in the manufacturing of both standard and special products, fully respecting customer expectations.

Our customer-oriented philosophy, which enables us to satisfy all customer requests **rapidly** and **with personalized products**, makes us a **dynamic and flexible enterprise**. The possibility of constantly controlling and monitoring the entire production process is essential to allow us to guarantee the quality of our products.

WORLDWIDE PRESENCE

Our foreign Branches enable us to offer a diversified range of products that allow us to successfully face the aggressive challenge of international competition, and also to maintain a stable presence at a local level.

The Group boasts **8** **business branches**

TECHNOLOGY

Our constant **quest for excellence in quality and technological innovation** allows us to offer only the best solutions and services for applications in many fields, including general industry, test rigs, lubrication, heavy engineering, renewable energies, naval engineering, offshore engineering, aviation systems, emerging technologies and mobile plant (i.e. tractors, excavators, concrete pumps, platforms).

AND PRODUCTION

Our high level of technological expertise means **we can rely entirely on our own resources, without resorting to external providers.** This in turn enables us to satisfy a growing number of customer requests, also exploiting our constantly updated range of machines and equipment, featuring **fully-automated workstations** capable of **24-hour production**.

SUCTION FILTERS

Flow rates
up to 875 l/min

Mounting:
- Tank immersed
- In-Line
- In tank with shut off valve
- In tank with flooded suction

RETURN FILTERS

Flow rates
up to 3000 l/min

Pressure
up to 20 bar

Mounting:
- In-Line
- Tank top
- In single and duplex designs

RETURN / SUCTION FILTERS

Flow rates
up to 300 l/min

Pressure
up to 80 bar

Mounting:
- In-Line
- Tank top

SPIN-ON FILTERS

Flow rates
up to 365 l/min

Pressure
up to 35 bar

Mounting:
- In-Line
- Tank top

LOW & MEDIUM PRESSURE FILTERS

Flow rates
up to 3000 l/min

Pressure
up to 80 bar

Mounting:
- In-Line
- Parallel manifold version
- In single and duplex designs

HIGH PRESSURE FILTERS

Flow rates
up to 750 l/min

Pressure from 110 bar
up to 560 bar

Mounting:
- In-Line
- Manifold
- In single and duplex designs

PRODUCT RANGE

MP Filtri can offer a vast and articulated range of products for the global market, suitable for all industrial sectors using hydraulic equipment.

This includes filters (suction, return, return/suction, spin-on, pressure, stainless steel pressure) and structural components (motor/pump bell-housings, transmission couplings, damping rings, foot brackets, aluminium tanks, cleaning covers).

We can provide all the skills and solutions required by the modern hydraulics industry to monitor contamination levels and other fluid conditions.

Mobile filtration units and a full range of accessories allow us to supply everything necessary for a complete service in the hydraulic circuits.

STAINLESS STEEL HIGH PRESSURE FILTERS

Flow rates
up to 125 l/min

Pressure from 320 bar
up to 1000 bar

Mounting:
- In-Line
- Manifold
- In single
  and duplex designs

CONTAMINATION MONITORING PRODUCTS

- Online, in-line particle counters
- Off-line bottle sampling products
- Fully calibrated using relevant ISO standards
- A wide range of variants to support fluid types and communication protocols

MOBILE FILTRATION UNITS

Flow rates from 15 l/min
up to 200 l/min

POWER TRANSMISSION PRODUCTS

- Aluminium bell-housings for motors from 0.12 kW to 400 kW
- Couplings in Aluminium Cast Iron - Steel
- Damping rings
- Foot bracket
- Aluminium tanks
- Cleaning covers

TANK ACCESSORIES

- Oil filler and air breather plugs
- Optical and electrical level gauges
- Pressure gauge valve selectors
- Pipe fixing brackets
- Pressure gauges

HYDRAULIC FILTRATION PRODUCTS

1 page	INTRODUCTION
1	COMPANY
6	PRODUCT RANGE
11	CONTAMINATION MANAGEMENT
22	FILTER SIZING
24	CORRECTIVE FACTOR

28 page	SUCTION FILTERS		up to Q_{max} l/min	up to Q_{max} gpm
31	STR & MPA - MPM	Submerged suction filter, with bypass or magnetic filter	1000	264
39	SF2 250 - 350	Semi-submerged positive head suction filter, low flow rate	160	42
47	SF2 500	Semi-submerged positive head suction filter, high flow rate	700	185
57	CLOGGING INDICATORS			

60 page	RETURN FILTERS		up to P_{max} bar	up to P_{max} psi	up to Q_{max} l/min	up to Q_{max} gpm
63	MPFX	Tank top semi-immersed filter, standard filter element disassembly	8	116	900	238
91	MPLX	Tank top semi-immersed filter, standard filter element disassembly	10	145	1800	476
99	MPTX	Tank top semi-immersed filter, easy filter element disassembly	8	116	300	79
117	MFBX	Bowl assembly	8	116	700	185
125	MPF	Tank top semi-immersed filter, standard filter element disassembly	8	116	900	238
153	MPT	Tank top semi-immersed filter, easy filter element disassembly	8	116	300	79
171	MFB	Bowl assembly	8	116	700	185
179	MPH	Tank top semi-immersed filter, standard filter element disassembly	10	145	3500	925
203	MPI	Tank top semi-immersed filter, standard filter element disassembly	10	145	3500	925
215	FRI	Tank top semi-immersed filter, easy filter element disassembly, it can be used also as in-line filter	20	290	2500	660
231	RF2	Semi-immersed under-head filter, easy filter element disassembly	20	290	615	162
238	CLOGGING INDICATORS					
248	ACCESSORIES					

250 page	RETURN / SUCTION FILTERS		up to P_{max} bar	up to P_{max} psi	up to Q_{max} l/min	up to Q_{max} gpm
253	MRSX	Unique TANK TOP filter for mobile machinery, with combined filtration on return and suction to the inlet at the hydrostatic transmissions in closed circuit	10	145	250	66
265	LMP 124 MULTIPORT	Unique IN-LINE filter for mobile machinery, with combined filtration on return and suction to the inlet at the hydrostatic transmissions in closed circuit	80	1160	120	32
273	CLOGGING INDICATORS					

286 page	SPIN-ON FILTERS		up to P_{max} bar	up to P_{max} psi	up to Q_{max} l/min	up to Q_{max} gpm
289	MPS	Low pressure filter, available with single cartridge (CS) for in-line or flange mounting or with two cartridge on the same axis on the opposite sides	12	174	365	96
305	MSH	In-line low and medium pressure filter available with single cartridge (CH)	35	508	195	52
311	CLOGGING INDICATORS					

INDEX

322 page		LOW & MEDIUM PRESSURE FILTERS	up to P_{max} bar	psi	up to Q_{max} l/min	gpm
325	LMP 110 - 120 - 123 MULTIPORT	In-line filter with Multiport design for multiple choice connection	80	1160	175	46
341	LMP 210 - 211	In-line low & medium pressure filter, low flow rate	60	870	365	96
351	LMP 400 - 401 & 430 - 431	In-line low & medium pressure filter, high flow rate	60	870	780	206
363	LMP 950 - 951	In-line filter, available with 2 and up to 6 different heads	30	435	2400	634
371	LMP 952 - 953 - 954	In-line low pressure filter specifically designed to be mounted in series	25	363	4500	1189
383	LMD 211	In-line duplex medium pressure filter	60	870	200	53
391	LMD 400 - 401 & 431	In-line duplex low pressure filter	16	232	600	159
407	LMD 951	In-line duplex filter, available with 2 up to 6 different heads	16	232	1200	317
415		Filter elements designed according to DIN 24550				
417	LDP - LDD	In-line and duplex medium pressure filter	60	870	360	95
427	LMP 900 - 901	In-line low pressure filter	30	435	2000	528
435	LMP 902 - 903	In-line filter specifically designed to be mounted in series	20	290	3000	793
444	CLOGGING INDICATORS					
450	ACCESSORIES					

452 page		HIGH PRESSURE FILTERS	up to P_{max} bar	psi	up to Q_{max} l/min	gpm
455	FMP 039	Filter high pressure, low flow rate applications	110	1595	80	21
463	FMP	Filter high pressure, high flow rate applications	320	4641	500	132
475	FHP	Typical high pressure filter for mobile applications, high flow rate	420	6092	630	166
493	FMM	Typical high pressure filter for mobile applications, low flow rate	420	6092	300	79
503	FHA 051	Filter optimized for use in high pressure operating systems, low flow rate	560	8122	150	40
511	FHM	High pressure filter with intermediate manifold construction	320	4641	400	106
529	FHB	High pressure for block mounting	320	4641	485	128
543	FHF 325	In-line manifold top mounting	350	5076	550	145
553	FHD	In-line duplex high pressure filter	350	5076	250	66
567	HPB	Pressure filter kits for integration in control manifolds	420	6092	300	79
576	CLOGGING INDICATORS					

584 page		STAINLESS STEEL HIGH PRESSURE FILTERS	up to P_{max} bar	psi	up to Q_{max} l/min	gpm
587	FZP	In-line pressure filter with threaded mount	420	6092	160	42
597	FZH	In-line pressure filter with threaded mount for higher pressure	700	10153	80	21
607	FZX	In-line pressure filter with threaded mount up to 1000 bar	1000	14504	10	3
615	FZM	Manifold top mounting	320	4641	70	18
623	FZB	Manifold side mounting	320	4641	70	18
631	FZD	Duplex pressure filter for continuous operation requirements	350	5076	60	16
641	CLOGGING INDICATORS					

646 page		CLOGGING INDICATORS
649	QUICK REFERENCE GUIDE	

THE CORRECT FILTER SIZING HAVE TO BE BASED ON THE TOTAL PRESSURE DROP DEPENDING BY THE APPLICATION.
FOR EXAMPLE, THE MAXIMUM TOTAL PRESSURE DROP ALLOWED BY A NEW AND CLEAN RETURN FILTER HAVE TO BE IN THE RANGE 0.4 - 0.6 bar / 5.80 - 8.70 psi.

The pressure drop calculation is performed by adding together the value of the housing with the value of the filter element. The pressure drop Δpc of the housing is proportional to the fluid density (kg/dm³ / lb/ft³).
The filter element pressure drop Δpe is proportional to its viscosity (mm²/s / SUS), the corrective factor Y have to be used in case of an oil viscosity different than 30 mm²/s (cSt) / 150 SUS.

Sizing data for single filter element, head at top

Δpc = Filter housing pressure drop [bar / psi]
Δpe = Filter element pressure drop [bar / psi]
Y = Corrective factor Y (see correspondent table), depending on the filter type, on the filter element size, on the filter element length and on the filter media
Q = flow rate (l/min - gpm)
V1 reference oil viscosity = 30 mm²/s (cSt) /150 SUS
V2 = operating oil viscosity in mm²/s (cSt) / SUS

Filter element pressure drop calculation with an oil viscosity different than 30 mm²/s (cSt) / 150 SUS

International system:
Δpe = Y : 1000 x Q x (V2:V1)

Imperial system:
Δpe = Y : 17.2 x Q x (V2:V1)

Δp Tot. = Δpc + Δpe

Verification formula

Δp Tot. ≤ Δp max allowed

Maximum total pressure drop (Δp max) allowed by a new and clean filter

Application	Range:[bar]	[psi]	
Suction filters	0.08 - 0.10 bar	1.16 - 1.45 psi	
Return filters	0.4 - 0.6 bar	5.80 - 8.70 psi	
Return - Suction filters (*)	0.8 - 1.0 bar	11.60 - 14.50 psi	
Low & Medium Pressure filters	0.4 - 0.6 bar	5.80 - 8.70 psi	return lines
	0.3 - 0.5 bar	4.35 - 7.25 psi	lubrication lines
	0.3 - 0.4 bar	4.35 - 5.80 psi	off-line in power systems
	0.1 - 0.3 bar	1.45 - 4.35 psi	off-line in test benches
	0.4 - 0.6 bar	5.80 - 8.7 psi	over-boost
High Pressure filters	0.8 - 1.5 bar	11.60 - 21.75 psi	
Stainless Steel filters	0.8 - 1.5 bar	11.60 - 21.75 psi	

(*) The suction flow rate should not exceed 30% of the return flow rate

Generic filter calculation example

Application data:
Tank top return filter
Pressure Pmax = 10 bar
Flow rate Q = 120 l/min
Viscosity V2 = 46 mm²/s (cSt)
Oil density = 0.86 kg/dm³
Required filtration efficiency = 25 µm with absolute filtration
With bypass valve and G 1 1/4" inlet connection

Calculation:
Δpc = 0.03 bar / 0.43 psi (see graphic below)

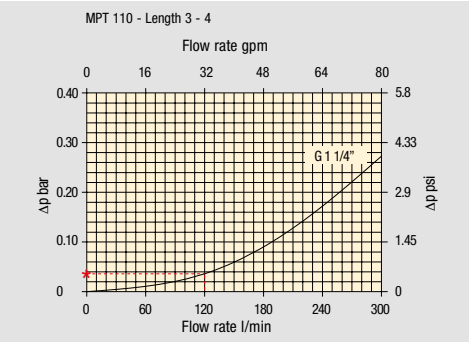

Filter housings Δp pressure drop.
The curves are plotted using mineral oil with density of 0.86 kg/dm³ in compliance with ISO 3968.
Δp varies proportionally with density.

Δpe = (2.00 : 1000) x 120 x (46 : 30) = 0.37 bar
Δpe = (2.00 : 17.2) x 32 x (216 : 150) = 5.36 psi

Filter element		Absolute filtration H Series					Nominal filtration N Series		
Type		A03	A06	A10	A16	A25	P10	P25	M25 M60 M90
Return filters		74.00	50.08	20.00	16.00	9.00	6.43	5.51	4.40
MF 020	2	29.20	24.12	8.00	7.22	5.00	3.33	2.85	2.00
	3	22.00	19.00	6.56	5.33	4.33	1.68	1.44	1.30
MF 030 MFX 030	1	74.00	50.08	20.00	16.00	9.00	6.43	5.51	3.40
MF 100 MFX 100	1	28.20	24.40	8.67	8.17	6.88	4.62	3.96	1.25
	2	17.33	12.50	6.86	5.70	4.00	3.05	2.47	1.10
	3	10.25	9.00	3.65	3.33	2.50	1.63	1.32	0.96
	4	6.10	5.40	2.30	2.20	2.00	1.19	0.96	0.82

Δp Tot. = 0.03 + 0.37 = 0.4 bar
Δp Tot. = 0.43 + 5.36 = 5.79 psi

The selection is correct because the total pressure drop value is inside the admissible range for top tank return filters.
In case the allowed max total pressure drop is not verified, it is necessary to repeat the calculation changing the filter length/size.

Corrective factor

Corrective factor Y to be used for the filter element pressure drop calculation. The values depend to the filter size and length and to the filter media.
Reference oil viscosity 30 mm²/s

Return filters

Filter element		Absolute filtration H Series					Nominal filtration N Series		
Type		A03	A06	A10	A16	A25	P10	P25	M25 M60 M90
MF 020	1	74.00	50.08	20.00	16.00	9.00	6.43	5.51	4.40
	2	29.20	24.12	8.00	7.22	5.00	3.33	2.85	2.00
	3	22.00	19.00	6.56	5.33	4.33	1.68	1.44	1.30
MF 030 MFX 030	1	74.00	50.08	20.00	16.00	9.00	6.43	5.51	3.40
MF 100 MFX 100	1	28.20	24.40	8.67	8.17	6.88	4.62	3.96	1.25
	2	17.33	12.50	6.86	5.70	4.00	3.05	2.47	1.10
	3	10.25	9.00	3.65	3.33	2.50	1.63	1.32	0.96
	4	6.10	5.40	2.30	2.20	2.00	1.19	0.96	0.82
MF 180 MFX 180	1	3.67	3.05	1.64	1.56	1.24	1.18	1.06	0.26
	2	1.69	1.37	0.68	0.54	0.51	0.43	0.39	0.12
MF 190 MFX 190	2	1.69	1.37	0.60	0.49	0.44	0.35	0.31	0.11
MF 400 MFX 400	1	3.20	2.75	1.39	1.33	1.06	0.96	0.87	0.22
	2	2.00	1.87	0.88	0.85	0.55	0.49	0.45	0.13
	3	1.90	1.60	0.63	0.51	0.49	0.39	0.35	0.11
MF 750 MFX 750	1	1.08	0.84	0.49	0.36	0.26	0.21	0.19	0.06
MLX 250	2	3.00	3.04	1.46	1.25	1.17	-	-	M25 0.20
MLX 660	2	1.29	1.26	0.52	0.44	0.38	-	-	M25 0.10
CU 025		78.00	48.00	28.00	24.00	9.33	9.33	8.51	1.25
CU 040		25.88	20.88	10.44	10.00	3.78	3.78	3.30	1.25
CU 100		15.20	14.53	5.14	4.95	2.00	2.00	0.17	1.10
CU 250		3.25	2.55	1.55	1.35	0.71	0.71	0.59	0.25
CU 630		1.96	1.68	0.85	0.72	0.42	0.42	0.36	0.09
CU 850		1.06	0.84	0.42	0.33	0.17	0.17	0.13	0.04
MR 100	1	19.00	17.00	6.90	6.30	4.60	2.94	2.52	1.60
	2	11.70	10.80	4.40	4.30	3.00	2.94	2.52	1.37
	3	7.80	6.87	3.70	3.10	2.70	2.14	1.84	1.34
	4	5.50	4.97	2.60	2.40	2.18	1.72	1.47	1.34
	5	4.20	3.84	2.36	2.15	1.90	1.60	1.37	1.34
MR 250	1	5.35	4.85	2.32	1.92	1.50	1.38	1.20	0.15
	2	4.00	3.28	1.44	1.10	1.07	0.96	0.83	0.13
	3	2.60	2.20	1.08	1.00	0.86	0.77	0.64	0.12
	4	1.84	1.56	0.68	0.56	0.44	0.37	0.23	0.11
MR 630	1	3.10	2.48	1.32	1.14	0.92	0.83	0.73	0.09
	2	2.06	1.92	0.82	0.76	0.38	0.33	0.27	0.08
	3	1.48	1.30	0.60	0.56	0.26	0.22	0.17	0.08
	4	1.30	1.20	0.48	0.40	0.25	0.21	0.16	0.08
	5	0.74	0.65	0.30	0.28	0.13	0.10	0.08	0.04
MR 850	1	0.60	0.43	0.34	0.25	0.13	0.12	0.09	0.03
	2	0.37	0.26	0.23	0.21	0.11	0.08	0.07	0.03
	3	0.27	0.18	0.17	0.17	0.05	0.04	0.04	0.02
	4	0.23	0.16	0.13	0.12	0.04	0.03	0.03	0.02

TYPICAL FILTER SIZING Selection Software

Step 1

Select “FILTER SIZING SOFTWARE” after login

OR

Select “FILTER SIZING” after login from a product page

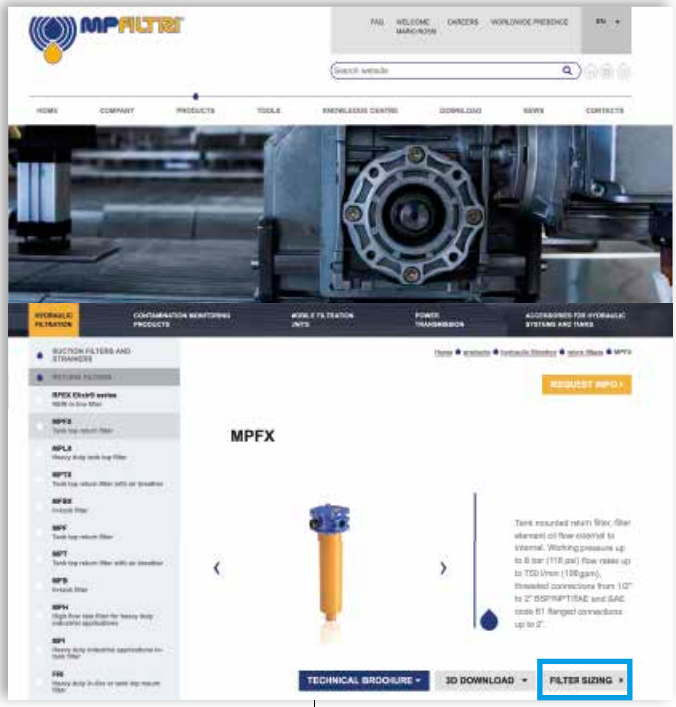

Step 2

Choose the type of filter family.
Enter the main data for sizing the filter
then push CALCULATE.

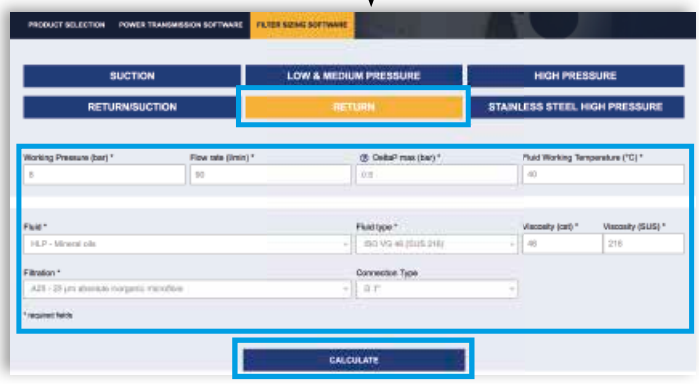

Enter the main data for sizing the filter
then push CALCULATE.

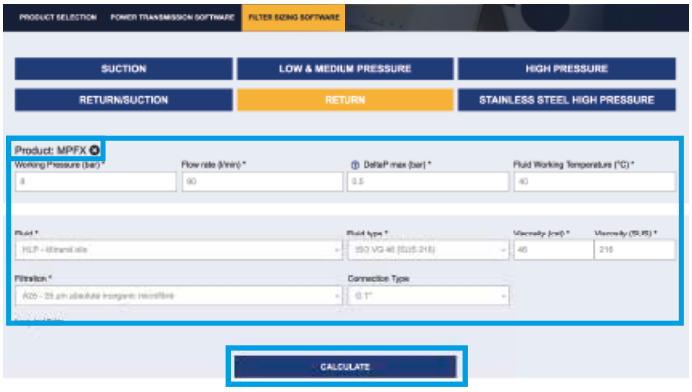

Step 3

Select the desidered options to choose the appropriate filter type for the application.

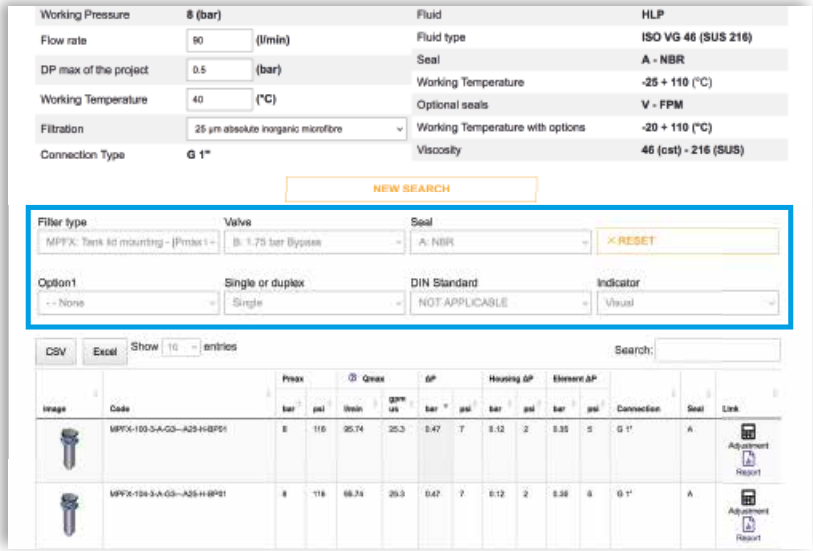

Step 4

Choose the most suitable filter from the proposed list.

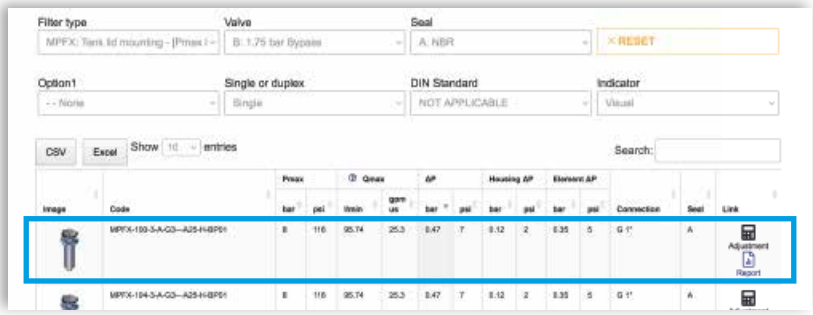

Step 5

A SAVE YOUR FILTER'S REPORT

B MANUAL EDIT

It is possible to change the filter modifying every parameter.

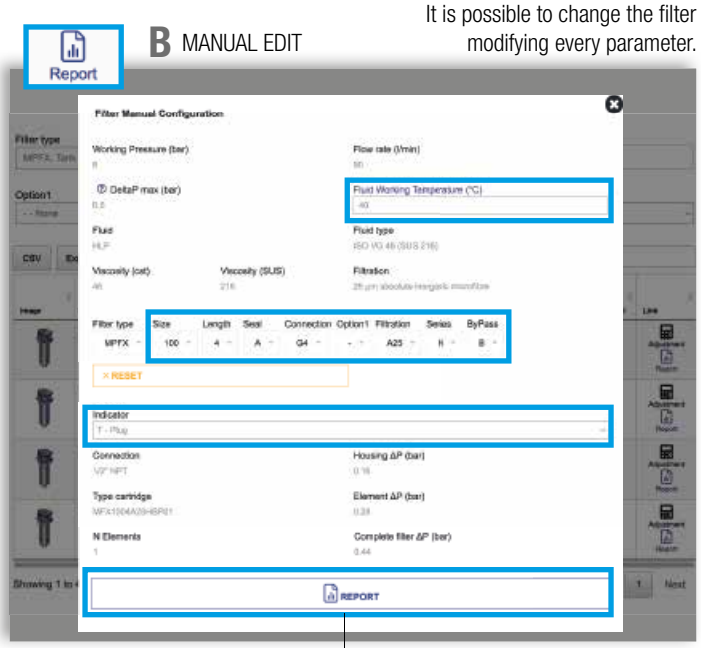

SAVE IN YOUR ARCHIVE
typing your reference data and then SAVE AS PDF

A new browser window displays the pdf

see **A**

Close the report window

By clicking your WELCOME button, the SHOW REPORTS is displayed: select it to see your filters list.

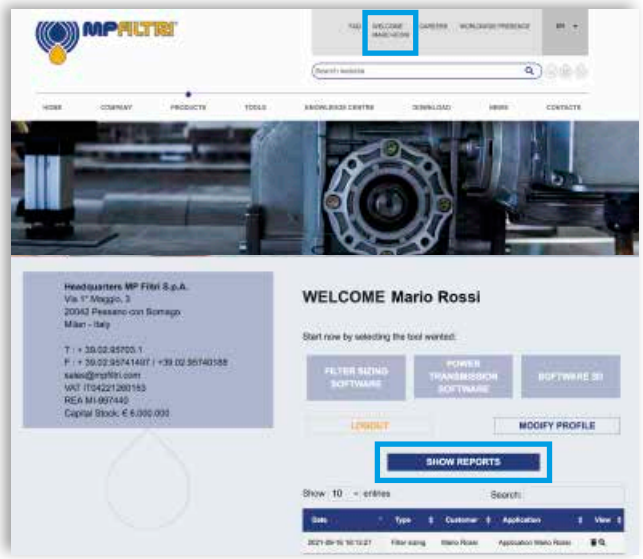

Return filters are used as process and safety filters to protect pumps and hydraulic circuits from contamination as per ISO 4406.

They are available in 8 styles:

- **MPFX-MPF tank top semi-immersed filter with external / internal oil flow; standard filter element disassembly**
- **MPLX tank top semi-immersed filter completely interchangeable with Pall 8420 & 8520, with external / internal oil flow; easy filter element disassembly**
- **MPTX-MPT tank top semi-immersed filter with external / internal oil flow; easy filter element disassembly without any specific tool**
- **MFBX-MFB element and bowl assembly with optional cover and hold-down spring for dirtbox or molded tank applications**
- **MPH tank top semi-immersed filter with internal / external oil flow, therefore keeping the dirt inside the bowl and not on the filter element; standard filter element disassembly, magnetic filter as option**
- **MPI semi-immersed filter element specifically designed to be mounted directly on the oil tank; magnetic filter as option**
- **FRI, the oldest tank top semi-immersed return filter manufactured by MP FILTRI, with external / internal oil flow; available in the single or duplex versions with outlet connection, it can be used also as in-line filter**
- **RF2 semi-immersed filter with shut-off valve for side tank mounting, with external / internal oil flow; easy filter element disassembly without any specific tool.**

FILTER SIZING

For the proper corrective factor Y see chapter at page 24

Return filters

MPFX	page 63
MPLX	91
MPTX	99
MFBX	117
MPF	125
MPT	153
MFB	171
MPH	page 179
MPI	203
FRI	215
RF2	231
INDICATORS	238
ACCESSORIES	248

MY CLEAN

THE NEW FILTER CONCEPT

MPFX MPLX MPTX MFBX MFX series

NEW FILTER ELEMENT WITH EXCLUSIVE INTERFACE CONNECTION

- **Protects the machine from improper use of non-original products.**
- **Safety of constant quality protection & reliability**

With exclusive filter element you are sure that only MP Filtri filter elements can be used, ensuring the best cleaning level of the oil due to the use of originals filter elements.

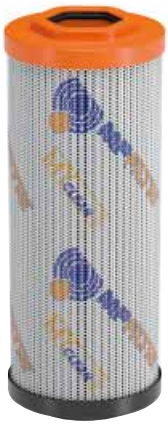

Filter element featuring our UNIQUE end cap with polygonal design.

UNIQUE polygonal spigot fitting within the filter bowl.

The products identified as MPFX, MPLX, MPTX, MFBX and MFX are protected by:

Italian Patent n° 102014902261205
Canadian Patent n° 2,937,258

and by the following patent applications:

European Patent n° 16181725.9
US Patent Pending n° 15/224,337

MPFX series

Maximum working pressure up to 800 kPa (8 bar) - Flow rate up to 900 l/min

MPFX GENERAL INFORMATION

Description

Return filter

Maximum working pressure up to 800 kPa (8 bar)
Flow rate up to 900 l/min

MPFX is a range of return filters for protection of the reservoir against the system contamination.
They are directly fixed to the reservoir, in immersed or semi-immersed position.
The filter output must be always immersed into the fluid to avoid aeration or foam generation into the reservoir.

Available features:

- Female threaded connections up to 2" and flanged connections up to 2", for a maximum flow rate of 750 l/min
- Multiple connections, to connect several return lines or drains
- Fine filtration rating, to get a good cleanliness level into the reservoir
- Bypass valve integrated into the filter element, to relieve excessive pressure drop across the filter media
- 2, 3 or 4 fixing holes for installation, to suit a variety of reservoir surfaces
- O-ring or Flat Seal to suit a variety of reservoir surfaces
- Oil dipstick, to easily check the level of the fluid into the reservoir (sold as separate item)
- Extension tube, to be used in deep reservoirs (sold as separate item)
- Diffuser, to reduce the risk of aeration, foaming and noise (sold as separate item)
- Filler plug, to fill cleaned fluid into the tank without an additional connection
- Visual, electrical and electronic clogging indicators
- MYclean interface connection, to protect the product against non-original spare parts
- External protective wrap, to optimize the flow through the element and to save the element efficiency against non-proper handling

Common applications:

- Light Industrial equipment
- Mobile application

Technical data

Filter housing materials

- Head: Aluminium

- Cover
  Nylon: MPFX 030-100-104-110
  Aluminium: MPFX 181-182-184-191-192-194-400-410-450-451-750

- Bowl: Nylon

Bypass valve

- Opening pressure 175 kPa (1.75 bar) ±10%
- Opening pressure 300 kPa (3 bar) ±10%

Δp element type

- Microfiber filter elements - series H: 10 bar
- Fluid flow through the filter element from OUT to IN

Seals

- Standard NBR series A
- Optional FPM series V

Temperature

From -25 °C to +110 °C

Note

MPFX filters are provided for vertical mounting

Weights [kg] and volumes [dm³]

Filter series	Weights [kg]					Volumes [dm³]				
	Length	1	2	3	4	Length	1	2	3	4
MPFX 030		0.40	-	-	-		0.29	-	-	-
MPFX 100		0.61	0.64	0.67	0.74		0.64	0.85	1.20	1.65
MPFX 104		0.82	0.96	1.02	1.25		0.64	0.85	1.20	1.65
MPFX 110		0.64	0.68	0.71	0.78		-	-	-	-
MPFX 181		2.20	3.00	-	-		2.50	4.00	-	-
MPFX 182		2.30	3.10	-	-		2.50	4.00	-	-
MPFX 184		2.55	3.45	-	-		2.65	4.45	-	-
MPFX 191		-	3.00	-	-		-	4.25	-	-
MPFX 192		-	3.10	-	-		-	4.25	-	-
MPFX 194		-	3.45	-	-		-	4.45	-	-
MPFX 400		3.35	3.65	3.90	-		3.70	4.60	5.40	-
MPFX 410		3.55	3.85	4.10	-		3.70	4.60	5.40	-
MPFX 450-451		3.95	4.25	4.50	-		3.70	4.60	5.40	-
MPFX 750		6.30	-	-	-		8.45	-	-	-

FILTER ASSEMBLY SIZING
Flow rates [l/min]

		Filter element design - H series					Filter element design - N series		
Filter series	Length	A03	A06	A10	A16	A25	M25 M60 M90	P10	P25
MPFX 030	**1**	7	10	24	29	47	84	60	66
MPFX 100-104-110	**1**	18	20	53	56	65	153	87	96
	2	28	38	65	75	95	158	111	123
	3	48	55	125	135	169	289	224	251
	4	79	89	180	185	198	306	264	289
MPFX 181-182-184	**1**	127	148	235	243	278	441	285	299
	2	231	262	358	382	388	472	404	412
MPFX 191-192-194	**2**	261	305	489	528	546	696	583	598
MPFX 400	**1**	150	171	294	304	350	585	370	390
	2	237	252	454	462	589	868	619	645
	3	248	288	553	609	621	885	680	703
MPFX 410	**1**	146	167	277	285	325	512	341	357
	2	226	239	396	402	485	644	503	519
	3	236	269	462	497	505	653	539	553
MPFX 450-451	**1**	150	171	294	304	350	585	370	390
	2	237	252	454	462	589	868	619	645
	3	248	288	553	609	621	885	680	703
MPFX 750	**1**	392	465	623	700	769	929	804	819

Maximum flow rate for a complete return filter with a pressure drop Δp = 0.5 bar.
The reference fluid has a kinematic viscosity of 30 mm^2/s (cSt) and a density of 0.86 kg/dm^3.
For different pressure drop or fluid viscosity we recommend to use our selection software available on www.mpfiltri.com.
You can also calculate the right size using the formulas present on the FILTER SIZING paragraph at the beginning of the full catalogue or at the beginning of the filter family brochure.
Please, contact our Sales Department for further additional information.

Hydraulic symbols

Filter series	Style 1 connection	Style 2 connections
MPFX 030	•	
MPFX 100	•	
MPFX 104	•	
MPFX 110		•
MPFX 181	•	
MPFX 182		•
MPFX 184	•	•
MPFX 191	•	
MPFX 192	•	
MPFX 194	•	•
MPFX 400	•	
MPFX 410		•
MPFX 450	•	
MPFX 451		•
MPFX 750	•	

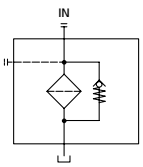

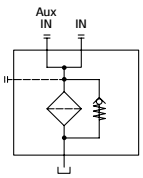

Pressure drop

Filter housings Δp pressure drop

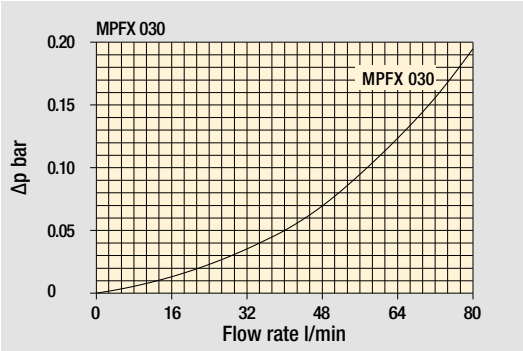

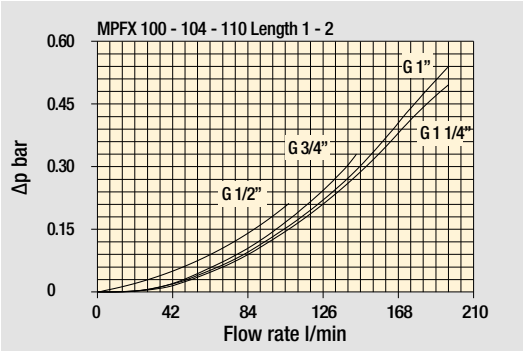

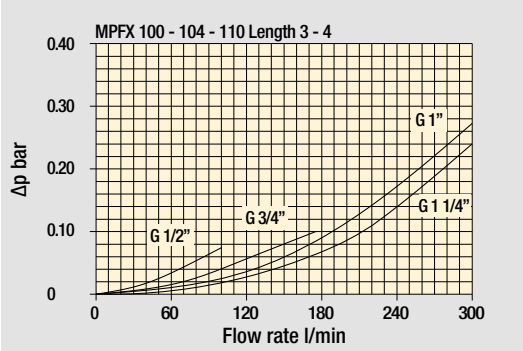

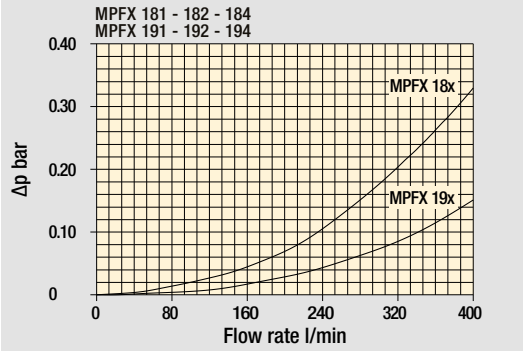

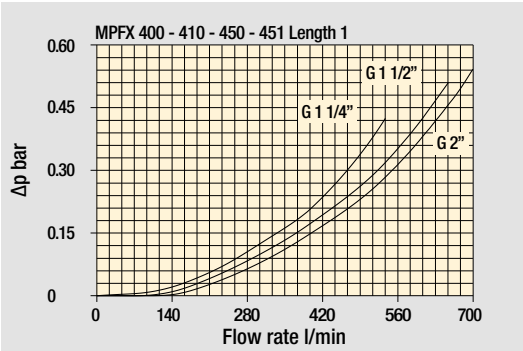

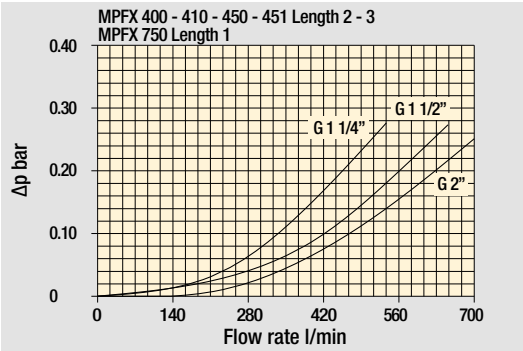

Bypass valve pressure drop

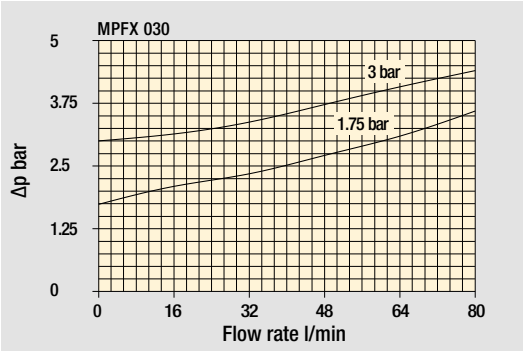

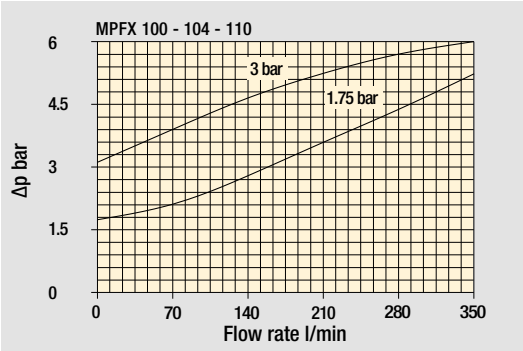

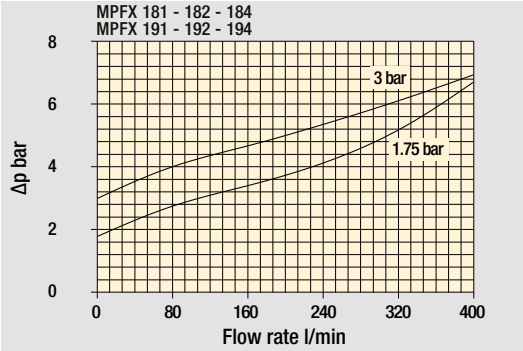

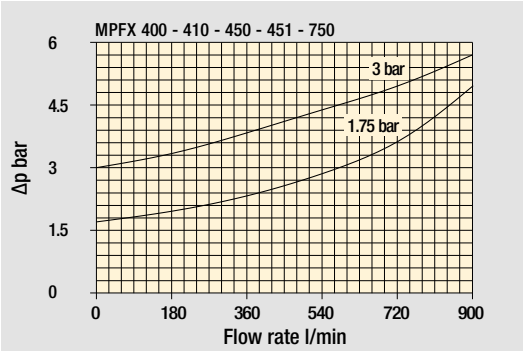

The curves are plotted using mineral oil with density of 0.86 kg/dm^3 in compliance with ISO 3968. Δp varies proportionally with density.

Standard - Single IN port

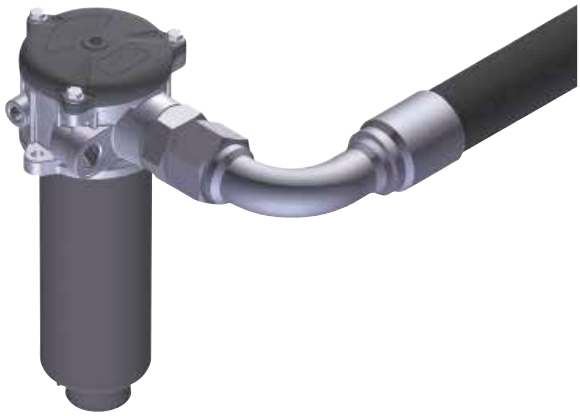

Double IN port
Option: double indicator port

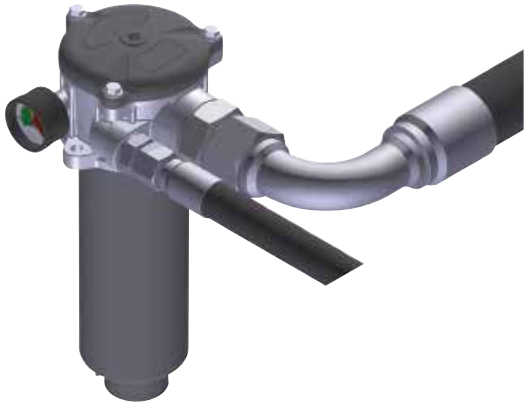

Double IN port - Drain port
Option: indicator port

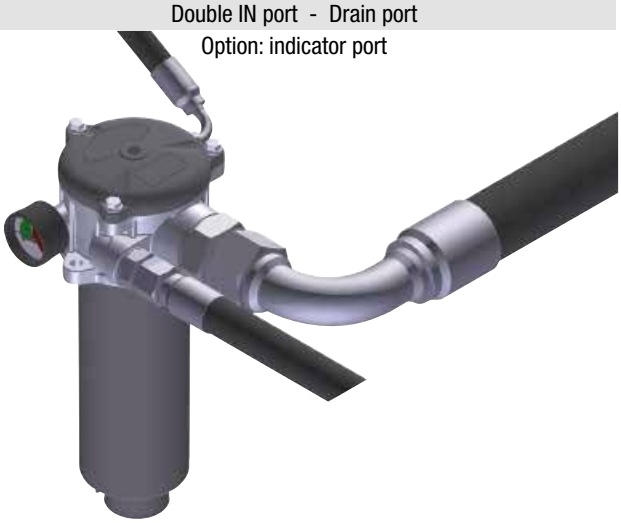

Double IN port - Double drain port

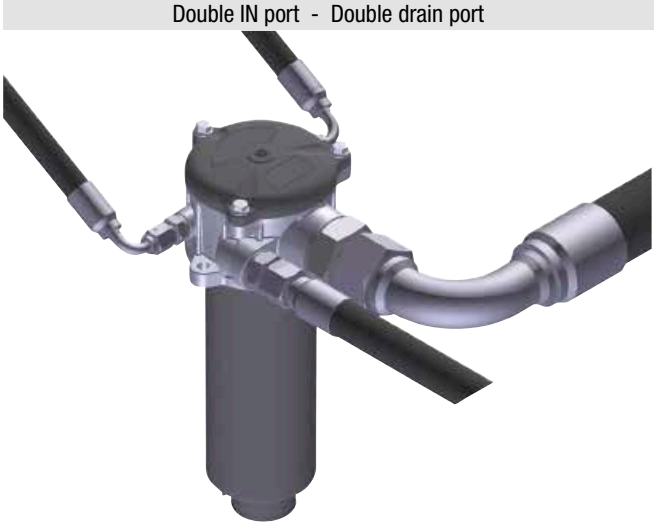

MPFX MPFX030

Designation & Ordering code

COMPLETE FILTER

Configuration example 1:	MPFX030	1	V	G1	M25	N	B	P01
Configuration example 2:	MPFX030	1	A	G4	A10	H	E	P01

Series and size

MPFX030 Filter element with private spigot

Length

1

Seals and treatments

A	NBR
V	FPM
W	NBR head anodized
Z	FPM head anodized

Connections

G1	G 1/2”
G4	1/2” NPT
G7	SAE 8 - 3/4” - 16 UNF

Filtration rating (filter media)

A03	Inorganic microfiber	**M25**	Wire mesh
A06	Inorganic microfiber	**M60**	Wire mesh
A10	Inorganic microfiber	**M90**	Wire mesh
A16	Inorganic microfiber	**P10**	Resin impregnated paper 10 µm
A25	Inorganic microfiber	**P25**	Resin impregnated paper

Element Δp		Filter media Axx	Mxx	Pxx
N	10 bar		•	•
H	10 bar	•		
W	10 bar, compatible with fluids HFA, HFB and HFC	•	•	

Bypass valve

E	3 bar
B	1.75 bar

Execution

P01	MP Filtri standard
Pxx	Customized

FILTER ELEMENT

Configuration example 1:	MFX030	1	M25	N	V		P01
Configuration example 2:	MFX030	1	A10	H	B	E	P01

Element series and size

MFX030 Filter element with private spigot

Element length

1

Filtration rating (filter media)

A03	Inorganic microfiber 3 µm	**M25**	Wire mesh 25 µm
A06	Inorganic microfiber 6 µm	**M60**	Wire mesh 60 µm
A10	Inorganic microfiber 10 µm	**M90**	Wire mesh 90 µm
A16	Inorganic microfiber 16 µm	**P10**	Resin impregnated paper 10 µm
A25	Inorganic microfiber 25 µm	**P25**	Resin impregnated paper 25 µm

Element Δp		Filter media Axx	Mxx	Pxx
N	10 bar		•	•
H	10 bar	•		
W	10 bar, compatible with fluids HFA, HFB and HFC	•	•	

Seals

B	NBR
V	FPM

Bypass valve

E	3 bar
	1.75 bar

Execution

P01	MP Filtri standard
Pxx	Customized

ACCESSORIES

Indicators		page
BVA	Axial pressure gauge	240
BVR	Radial pressure gauge	240
BVP	Visual pressure indicator with automatic reset	241
BVQ	Visual pressure indicator with manual reset	241
BEA	Electrical pressure indicator	239
BEM	Electrical pressure indicator	239
BLA	Electrical / visual pressure indicator	239-240

Additional features		page
TE	Extension tube	248
T5	Filler plug M30x1.5	249

MPFX030

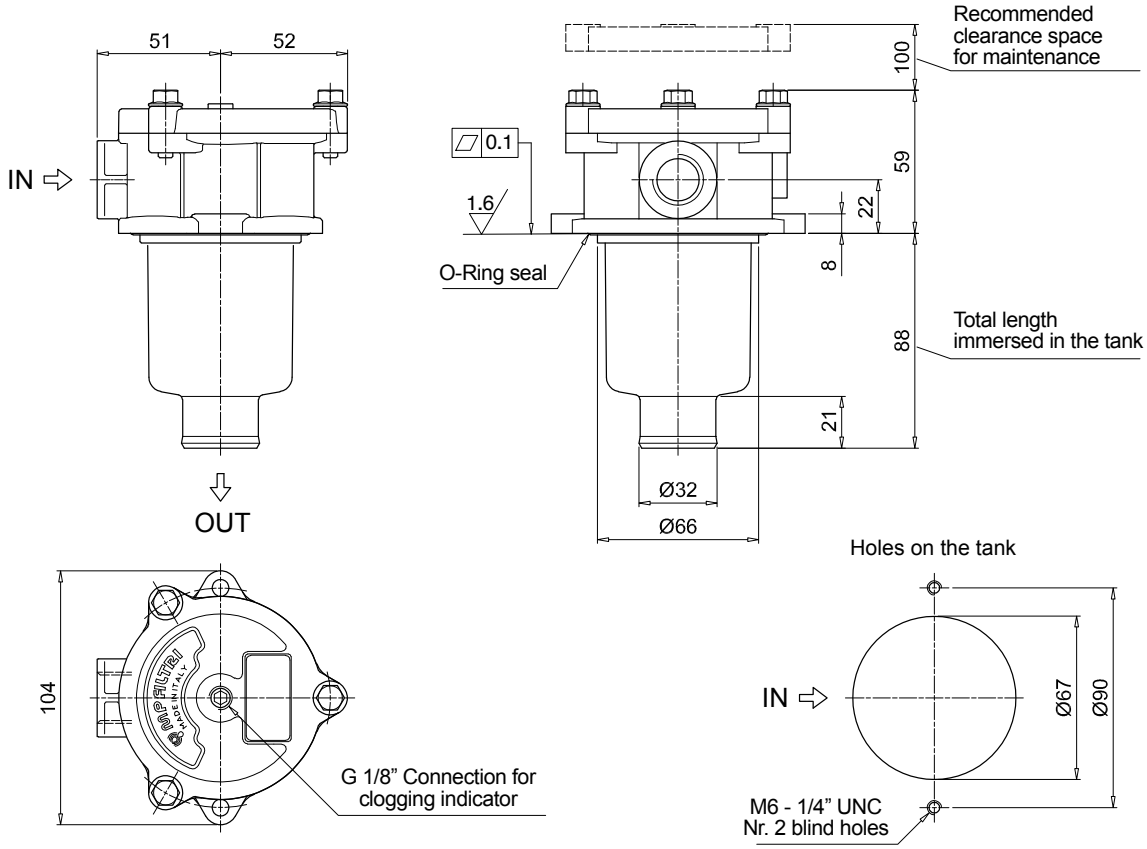
51
52
IN
OUT
0.1
1.6
O-Ring seal
Recommended clearance space for maintenance
100
59
22
8
88
21
Total length immersed in the tank
Ø32
Ø66
104
G 1/8" Connection for clogging indicator
Holes on the tank
IN
Ø67
Ø90
M6 - 1/4" UNC
Nr. 2 blind holes

MPFX MPFX100 - MPFX104

Designation & Ordering code

COMPLETE FILTER

Configuration example 1:	MPFX100	2	W	G3	A06	W	B	P01
Configuration example 2:	MPFX104	4	A	G8	P10	N	E	P01

Series and size

MPFX100 | **MPFX104** Filter element with private spigot

Length

1 | **2** | **3** | **4** |

Seals and treatments

A	NBR
V	FPM
W	NBR head anodized
Z	FPM head anodized

Connections		Size 100	Size 104
G1	G 1/2”	•	•
G2	G 3/4”	•	•
G3	G 1”	•	•
G4	1/2” NPT	•	•
G5	3/4” NPT	•	•
G6	1” NPT	•	•

Connections		Size 100	Size 104
G7	SAE 8 - 3/4” - 16 UNF	•	•
G8	SAE 12 - 1 1/16” - 12 UN	•	•
G9	SAE 16 - 1 5/16” - 12 UN	•	•

Filtration rating (filter media)

A03	Inorganic microfiber 3 µm	**M25**	Wire mesh 25 µm
A06	Inorganic microfiber 6 µm	**M60**	Wire mesh 60 µm
A10	Inorganic microfiber 10 µm	**M90**	Wire mesh 90 µm
A16	Inorganic microfiber 16 µm	**P10**	Resin impregnated paper 10 µm
A25	Inorganic microfiber 25 µm	**P25**	Resin impregnated paper 25 µm

Element Δp		Filter media Axx	Mxx	Pxx
N	10 bar		•	•
H	10 bar	•		
W	10 bar, compatible with fluids HFA, HFB and HFC	•	•	

Bypass valve

E	3 bar
B	1.75 bar

Execution

P01	MP Filtri standard
Pxx	Customized

FILTER ELEMENT

Configuration example 1:	MFX100	2	A06	W	B		P01
Configuration example 2:	MFX100	4	P10	N	B	E	P01

Element series and size

MFX100 Filter element with private spigot

Element length

1 | **2** | **3** | **4** |

Filtration rating (filter media)

A03	Inorganic microfiber 3 µm	**M25**	Wire mesh 25 µm
A06	Inorganic microfiber 6 µm	**M60**	Wire mesh 60 µm
A10	Inorganic microfiber 10 µm	**M90**	Wire mesh 90 µm
A16	Inorganic microfiber 16 µm	**P10**	Resin impregnated paper 10 µm
A25	Inorganic microfiber 25 µm	**P25**	Resin impregnated paper 25 µm

Element Δp		Filter media Axx	Mxx	Pxx
N	10 bar		•	•
H	10 bar	•		
W	10 bar, compatible with fluids HFA, HFB and HFC	•	•	

Seals

B	NBR
V	FPM

Bypass valve

E	3 bar
	1.75 bar

Execution

P01	MP Filtri standard
Pxx	Customized

ACCESSORIES

Indicators		page
BVA	Axial pressure gauge	240
BVR	Radial pressure gauge	240
BVP	Visual pressure indicator with automatic reset	241
BVQ	Visual pressure indicator with manual reset	241
BEA	Electrical pressure indicator	239
BEM	Electrical pressure indicator	239
BLA	Electrical / visual pressure indicator	239-240

Additional features		page
TE	Extension tube	248
DFS	Diffuser with fast lock connection	249
T5	Filler plug M30x1.5	249
DPT	Dipstick	249

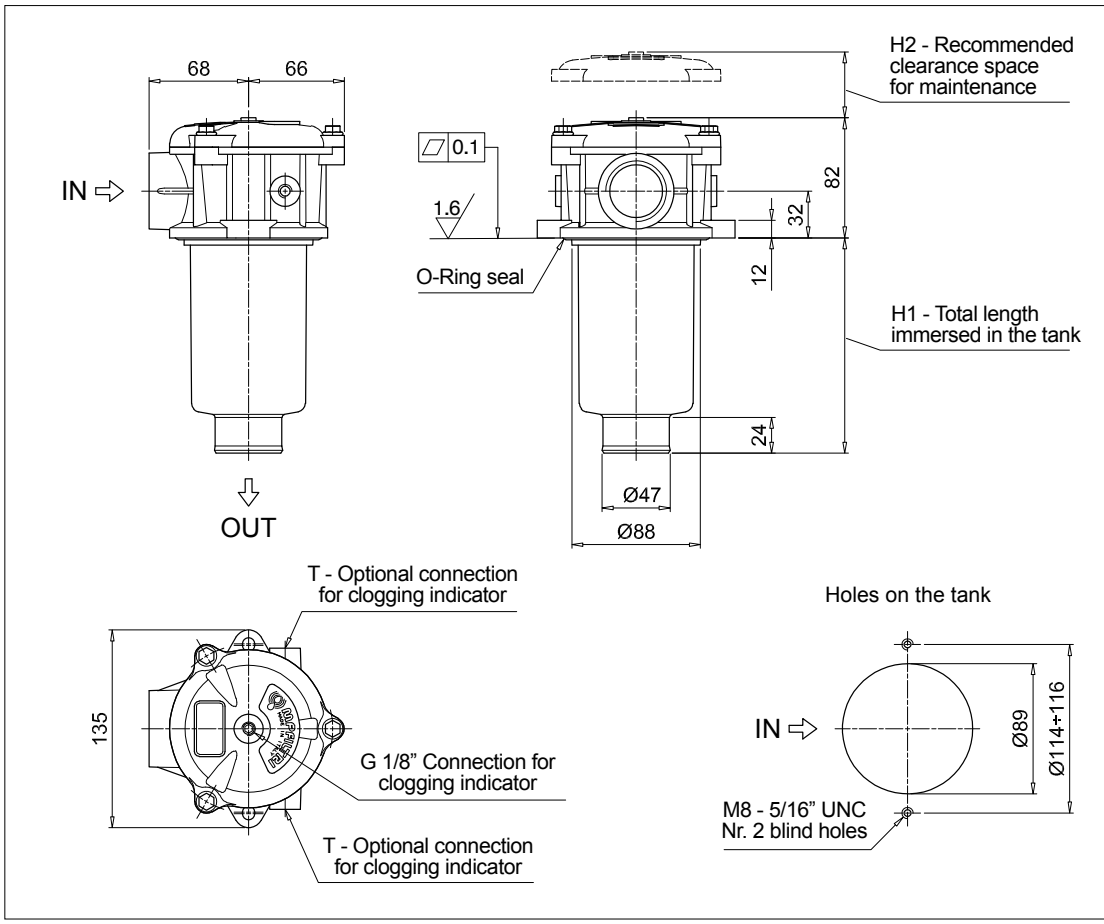

MPFX100		
Filter length	H1 [mm]	H2 [mm]
1	102	120
2	147	170
3	225	250
4	327	350

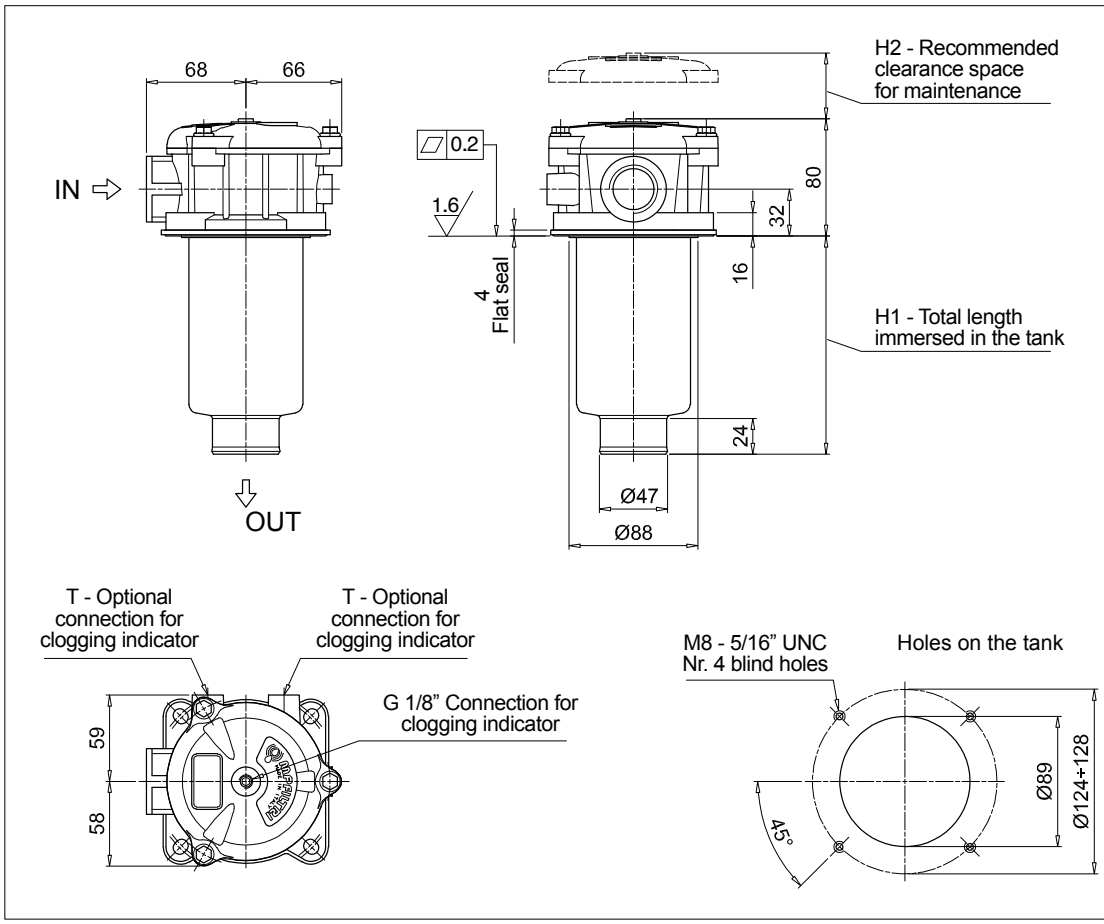

MPFX104		
Filter length	H1 [mm]	H2 [mm]
1	100	120
2	145	170
3	223	250
4	325	350

MPFX MPFX110

Designation & Ordering code

COMPLETE FILTER

Configuration example 1:	MPFX110	3	Z	G4	2	M25	W	B	P01
Configuration example 2:	MPFX110	4	A	G8	1	P10	N	E	P01

Series and size

MPFX110 Filter element with private spigot

Length

1 | **2** | **3** | **4** |

Seals and treatments

A	NBR	**W**	NBR head anodized
V	FPM	**Z**	FPM head anodized

Main Connections		Aux size 1	Aux size 2
G1	G 1/2"	G 3/8"	G 1/2"
G2	G 3/4"		
G3	G 1"		
G4	1/2" NPT	3/8" NPT	1/2" NPT
G5	3/4" NPT		
G6	1" NPT		

Main Connections		Aux size 1	Aux size 2
G7	SAE 8 - 3/4" - 16 UNF	SAE 6 - 9/16"- 18 UNF	SAE 8 - 3/4"- 16 UNF
G8	SAE 12 - 1 1/16" - 12 UN		
G9	SAE 16 - 1 5/16" - 12 UN		
G10	G 1 1/4"	G 3/8"	G 1/2"
G11	1 1/4" NPT	3/8" NPT	1/2" NPT
G12	SAE 20 - 1 5/8" - 12 UN	SAE 6 - 9/16"- 18 UNF	SAE 8 - 3/4"- 16 UNF

Aux connection - see previous table

1	Aux size 1	**2**	Aux size 2

Filtration rating (filter media)

A03	Inorganic microfiber 3 µm	**M25**	Wire mesh 25 µm
A06	Inorganic microfiber 6 µm	**M60**	Wire mesh 60 µm
A10	Inorganic microfiber 10 µm	**M90**	Wire mesh 90 µm
A16	Inorganic microfiber 16 µm	**P10**	Resin impregnated paper 10 µm
A25	Inorganic microfiber 25 µm	**P25**	Resin impregnated paper 25 µm

Element Δp		Filter media Axx	Mxx	Pxx
N	10 bar		•	•
H	10 bar	•		
W	10 bar, compatible with fluids HFA, HFB and HFC	•	•	

Bypass valve

E	3 bar
B	1.75 bar

Execution

P01	MP Filtri standard
Pxx	Customized

FILTER ELEMENT

Configuration example 1:	MFX100	3	M25	W	V		P01
Configuration example 2:	MFX100	4	P10	N	B	E	P01

Element series and size

MFX100 Filter element with private spigot

Element length

1 | **2** | **3** | **4** |

Filtration rating (filter media)

A03	Inorganic microfiber 3 µm	**M25**	Wire mesh 25 µm
A06	Inorganic microfiber 6 µm	**M60**	Wire mesh 60 µm
A10	Inorganic microfiber 10 µm	**M90**	Wire mesh 90 µm
A16	Inorganic microfiber 16 µm	**P10**	Resin impregnated paper 10 µm
A25	Inorganic microfiber 25 µm	**P25**	Resin impregnated paper 25 µm

Element Δp		Filter media Axx	Mxx	Pxx
N	10 bar		•	•
H	10 bar	•		
W	10 bar, compatible with fluids HFA, HFB and HFC	•	•	

Seals

B	NBR
V	FPM

Bypass valve

E	3 bar
	1.75 bar

Execution

P01	MP Filtri standard
Pxx	Customized

ACCESSORIES

Indicators		page
BVA	Axial pressure gauge	240
BVR	Radial pressure gauge	240
BVP	Visual pressure indicator with automatic reset	241
BVQ	Visual pressure indicator with manual reset	241
BEA	Electrical pressure indicator	239
BEM	Electrical pressure indicator	239
BLA	Electrical / visual pressure indicator	239-240

Additional features		page
TE	Extension tube	248
DFS	Diffuser with fast lock connection	249
T5	Filler plug M30x1.5	249
DPT	Dipstick	249

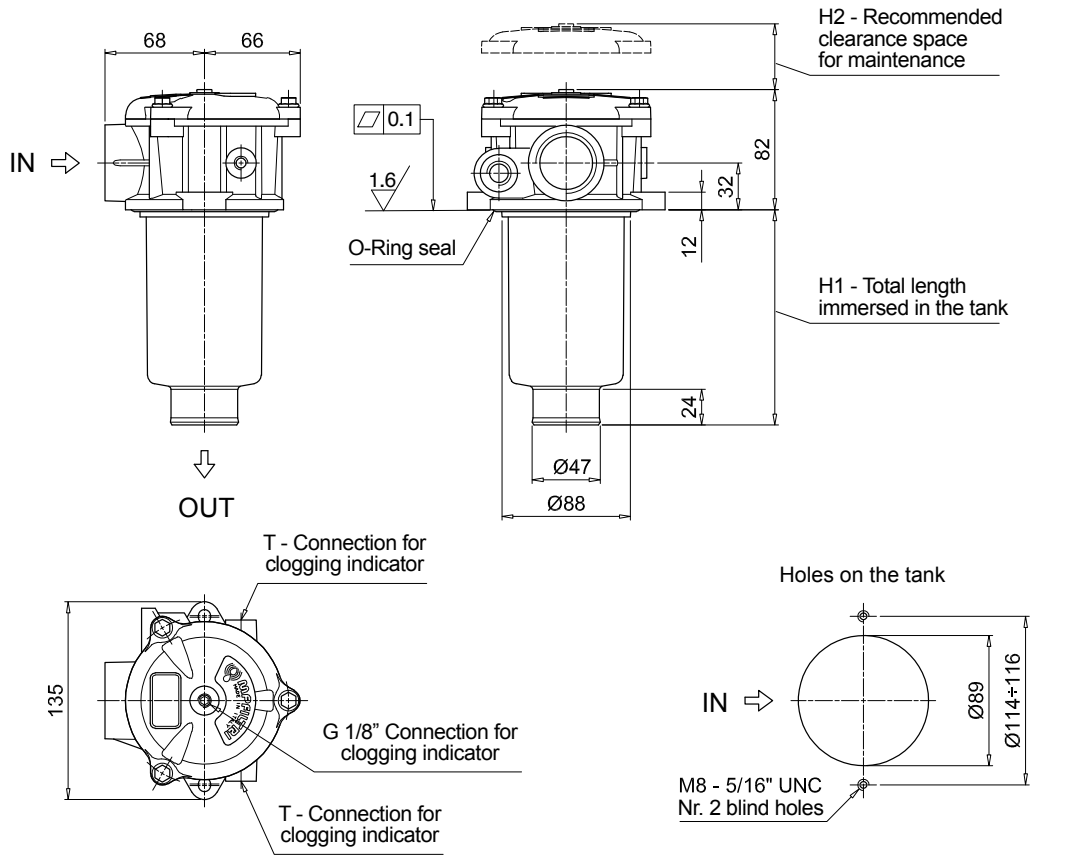

MPFX110		
Filter length	**H1 [mm]**	**H2 [mm]**
1	102	120
2	147	170
3	225	250
4	327	350

Connections	T
G1-G2-G3	G 1/8"
G4-G5-G6-G7-G8-G9	1/8" NPT
G10	G 1/8"
G11-G12	1/8" NPT

MPFX MPFX181 - MPFX191

Designation & Ordering code

COMPLETE FILTER

Configuration example 1:	MPFX181	1	A	G1	A25	H	E	P01
Configuration example 2:	MPFX191	2	V	G2	P10	N	B	P01

Series and size

MPFX181 | **MPFX191** Filter element with private spigot

Length	Size 181	Size 191
1	•	
2	•	•

Seals and treatments

A	NBR		**B**	NBR	flat seal on head
V	FPM		**D**	FPM	flat seal on head
W	NBR	head anodized	**L**	NBR	head anodized, flat seal on head
Z	FPM	head anodized	**M**	FPM	head anodized, flat seal on head

Connections

G1	G 1 1/4”	**G5**	1 1/2” NPT
G2	G 1 1/2”	**G7**	SAE 20 - 1 5/8” - 12 UN
G4	1 1/4” NPT	**G8**	SAE 24 - 1 7/8” - 12 UN

Filtration rating (filter media)

A03	Inorganic microfiber 3 µm	**M25**	Wire mesh 25 µm
A06	Inorganic microfiber 6 µm	**M60**	Wire mesh 60 µm
A10	Inorganic microfiber 10 µm	**M90**	Wire mesh 90 µm
A16	Inorganic microfiber 16 µm	**P10**	Resin impregnated paper 10 µm
A25	Inorganic microfiber 25 µm	**P25**	Resin impregnated paper 25 µm

Element Δp		Filter media Axx	Mxx	Pxx
N	10 bar		•	•
H	10 bar	•		
W	10 bar, compatible with fluids HFA, HFB and HFC	•	•	

Bypass valve

E	3 bar
B	1.75 bar

Execution

P01	MP Filtri standard
Pxx	Customized

FILTER ELEMENT

Configuration example 1:	MFX180	1	A25	H	B	E	P01
Configuration example 2:	MFX180	2	P10	N	V		P01

Element series and size

MFX180 Filter element with private spigot

Element length

1

2

Filtration rating (filter media)

A03	Inorganic microfiber 3 µm	**M25**	Wire mesh 25 µm
A06	Inorganic microfiber 6 µm	**M60**	Wire mesh 60 µm
A10	Inorganic microfiber 10 µm	**M90**	Wire mesh 90 µm
A16	Inorganic microfiber 16 µm	**P10**	Resin impregnated paper 10 µm
A25	Inorganic microfiber 25 µm	**P25**	Resin impregnated paper 25 µm

Element Δp		Filter media Axx	Mxx	Pxx
N	10 bar		•	•
H	10 bar	•		
W	10 bar, compatible with fluids HFA, HFB and HFC	•	•	

Seals

B	NBR
V	FPM

Bypass valve

E	3 bar
	1.75 bar

Execution

P01	MP Filtri standard
Pxx	Customized

ACCESSORIES

Indicators		page
BVA	Axial pressure gauge	240
BVR	Radial pressure gauge	240
BVP	Visual pressure indicator with automatic reset	241
BVQ	Visual pressure indicator with manual reset	241

		page
BEA	Electrical pressure indicator	239
BEM	Electrical pressure indicator	239
BLA	Electrical / visual pressure indicator	239-240

Additional features		page
TE	Extension tube	248
T5	Filler plug M30x1.5	249

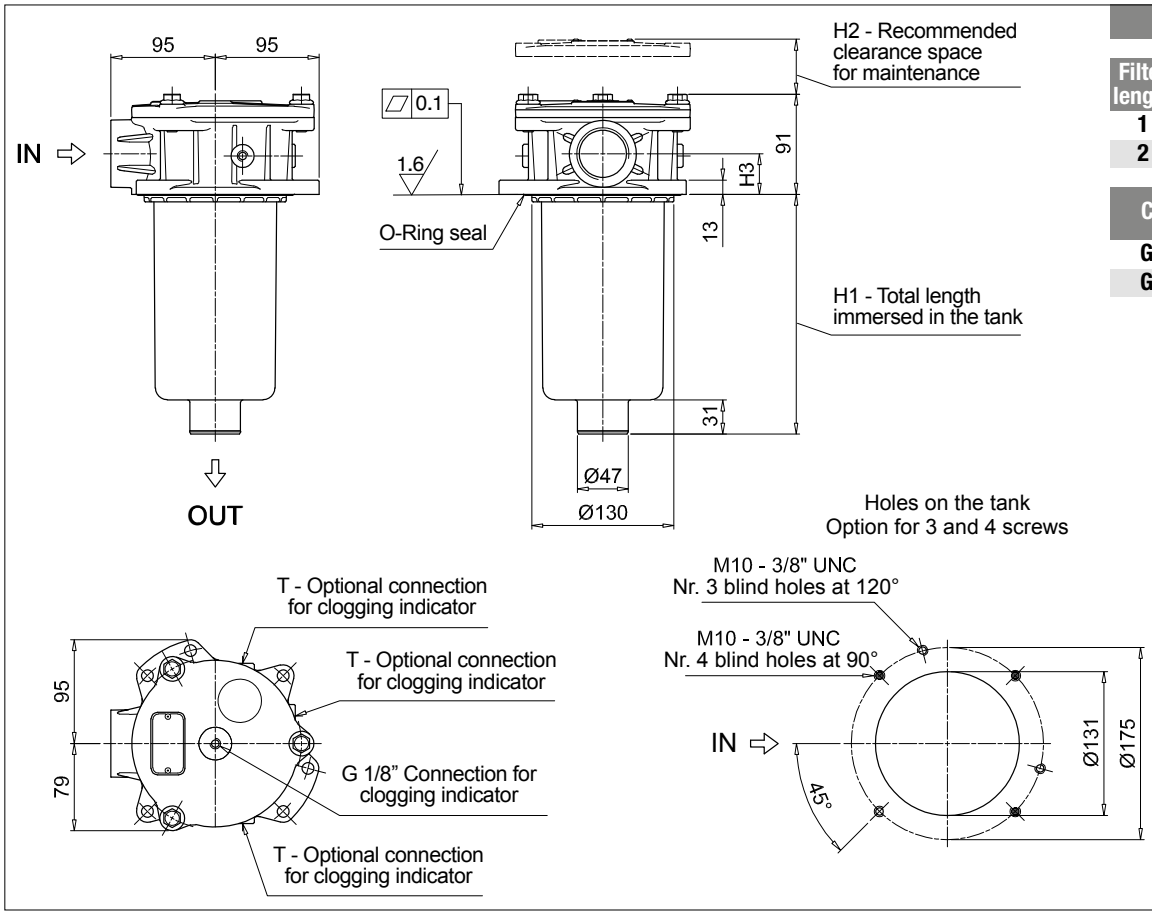

MPFX181

Filter length	H1 [mm]	H2 [mm]
1	235	255
2	448	475

Connections	H3 [mm]
G1 - G4 - G7	35
G2 - G5 - G8	37

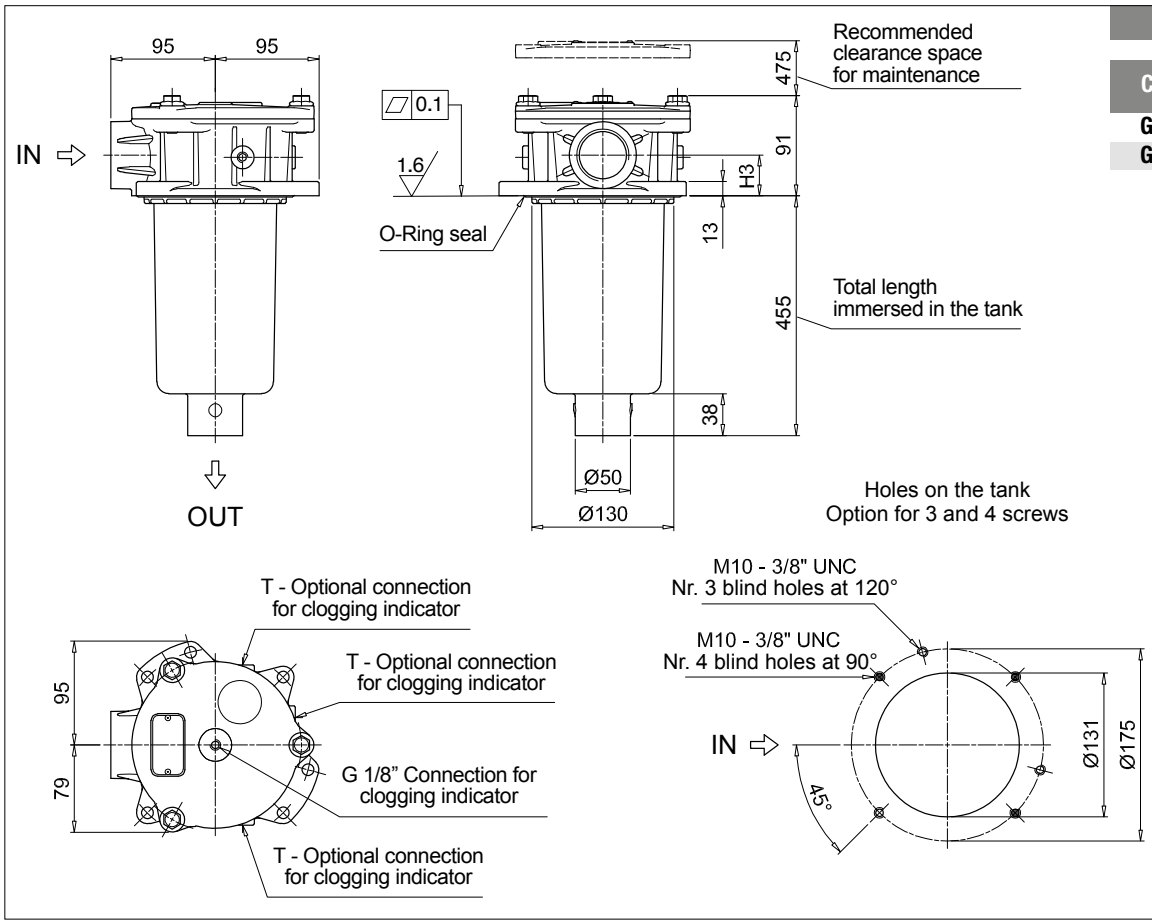

MPFX191

Connections	H3 [mm]
G1 - G4 - G7	35
G2 - G5 - G8	37

MPFX MPFX182 - MPFX192

Designation & Ordering code

COMPLETE FILTER

Configuration example 1:	MPFX182	1	A	G1	1	A25	H	E	P01
Configuration example 2:	MPFX192	2	V	G4	2	P10	N	B	P01

Series and size

MPFX182 | **MPFX192** Filter element with private spigot

Length	Size 182	Size 192
1	•	
2	•	•

Seals and treatments

A	NBR		**B**	NBR	flat seal on head
V	FPM		**D**	FPM	flat seal on head
W	NBR	head anodized	**L**	NBR	head anodized, flat seal on head
Z	FPM	head anodized	**M**	FPM	head anodized, flat seal on head

Main Connections		Aux size 1	Aux size 2
G1	G 1 1/4"	G 1/2"	G 3/4"
G4	1 1/4" NPT	1/2" NPT	3/4" NPT
G7	SAE 20 - 1 5/8" - 12 UN	SAE 8 - 3/16"- 16 UNF	SAE 12 - 1 1/16"- 12 UN

Aux connection - see previous table

1	Aux size 1	**2**	Aux size 2

Filtration rating (filter media)

A03	Inorganic microfiber 3 µm	**M25**	Wire mesh 25 µm
A06	Inorganic microfiber 6 µm	**M60**	Wire mesh 60 µm
A10	Inorganic microfiber 10 µm	**M90**	Wire mesh 90 µm
A16	Inorganic microfiber 16 µm	**P10**	Resin impregnated paper 10 µm
A25	Inorganic microfiber 25 µm	**P25**	Resin impregnated paper 25 µm

Element Δp		Filter media Axx	Mxx	Pxx
N	10 bar		•	•
H	10 bar	•		
W	10 bar, compatible with fluids HFA, HFB and HFC	•	•	

Bypass valve

E	3 bar
B	1.75 bar

Execution

P01	MP Filtri standard
Pxx	Customized

FILTER ELEMENT

Configuration example 1:	MFX180	1	A25	H	B	E	P01
Configuration example 2:	MFX180	2	P10	N	V		P01

Element series and size

MFX180 Filter element with private spigot

Element length

1

2

Filtration rating (filter media)

A03	Inorganic microfiber 3 µm	**M25**	Wire mesh 25 µm
A06	Inorganic microfiber 6 µm	**M60**	Wire mesh 60 µm
A10	Inorganic microfiber 10 µm	**M90**	Wire mesh 90 µm
A16	Inorganic microfiber 16 µm	**P10**	Resin impregnated paper 10 µm
A25	Inorganic microfiber 25 µm	**P25**	Resin impregnated paper 25 µm

Element Δp		Filter media Axx	Mxx	Pxx
N	10 bar		•	•
H	10 bar	•		
W	10 bar, compatible with fluids HFA, HFB and HFC	•	•	

Seals

B	NBR
V	FPM

Bypass valve

E	3 bar
	1.75 bar

Execution

P01	MP Filtri standard
Pxx	Customized

ACCESSORIES

Indicators		page
BVA	Axial pressure gauge	240
BVR	Radial pressure gauge	240
BVP	Visual pressure indicator with automatic reset	241
BVQ	Visual pressure indicator with manual reset	241
BEA	Electrical pressure indicator	239
BEM	Electrical pressure indicator	239
BLA	Electrical / visual pressure indicator	239-240

Additional features		page
TE	Extension tube	248
T5	Filler plug M30x1.5	249

Dimensions

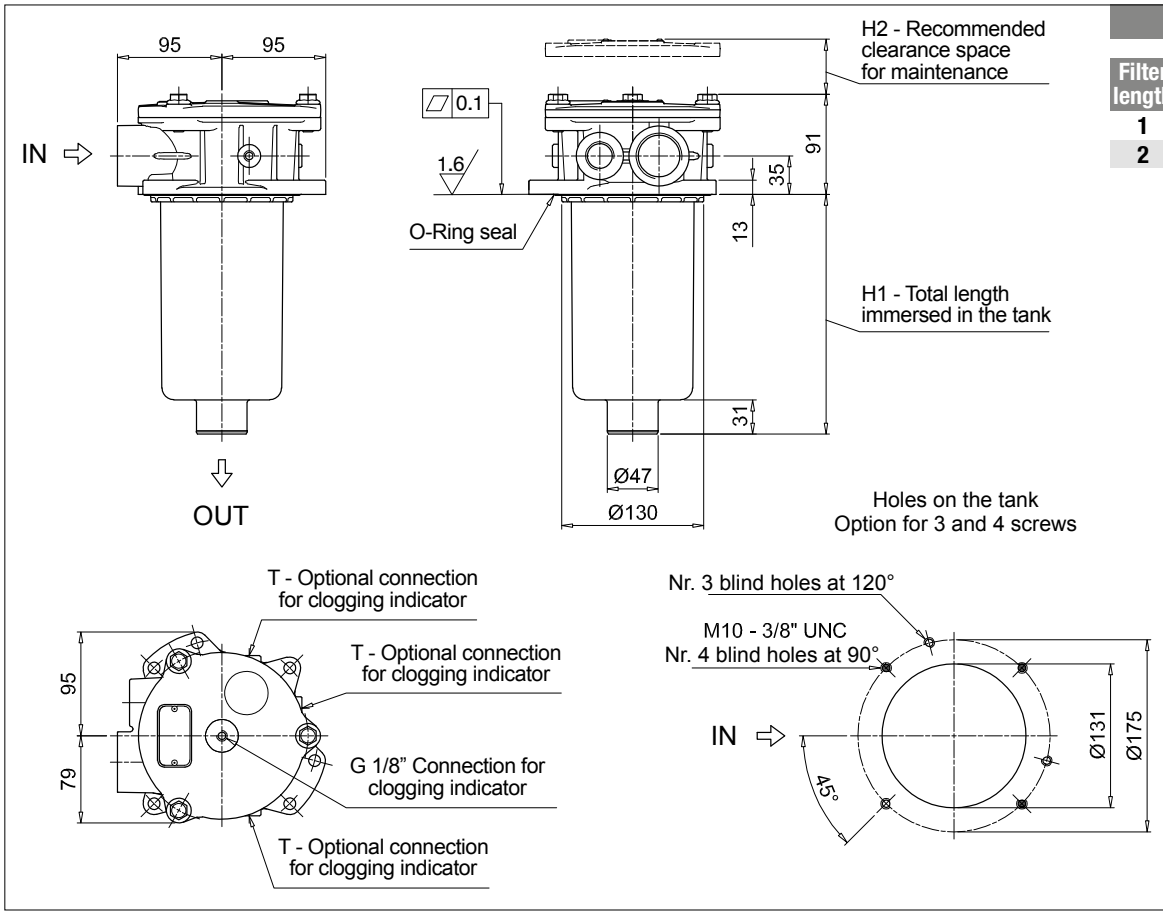

MPFX182

Filter length	H1 [mm]	H2 [mm]
1	235	255
2	448	475

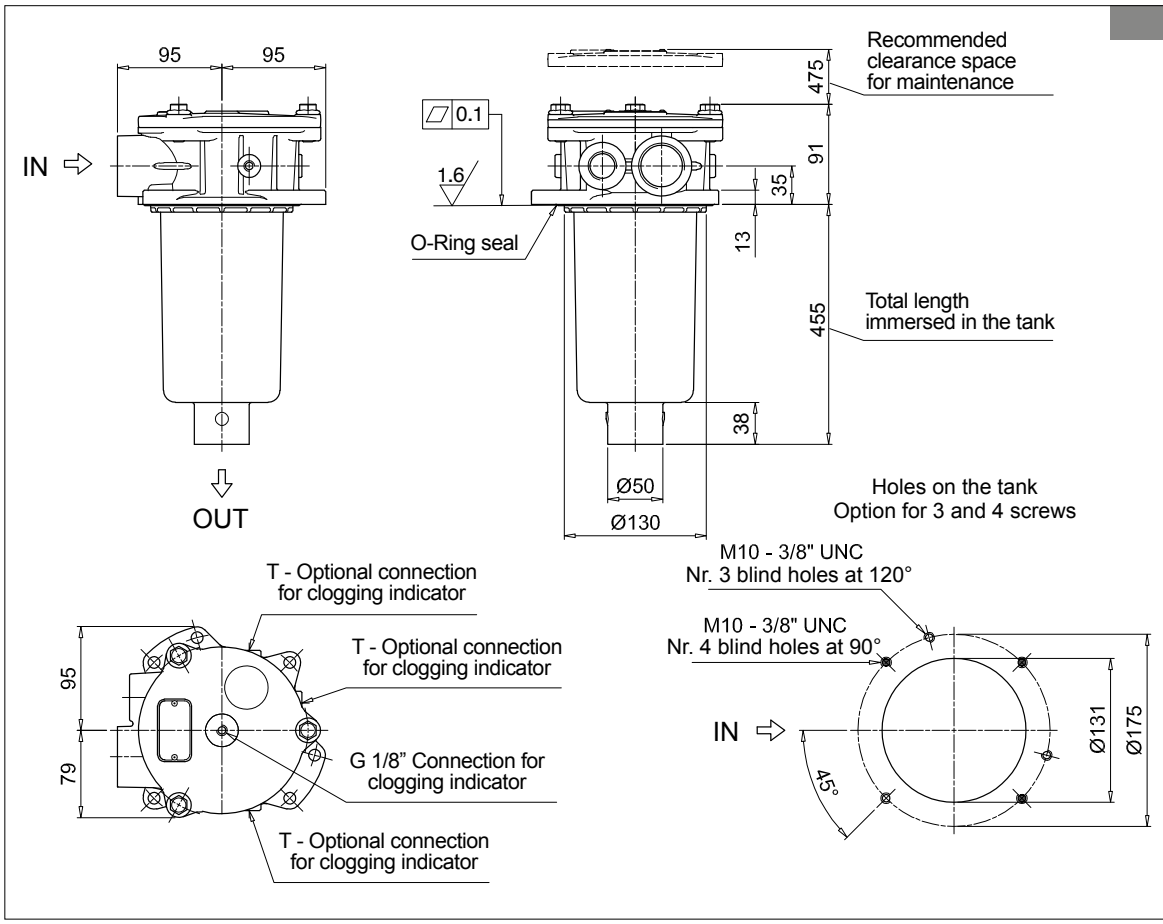

MPFX192

MPFX MPFX184 - MPFX194

Designation & Ordering code

COMPLETE FILTER

Configuration example 1:	MPFX184	1	A	G1	A25	H	E	P01
Configuration example 2:	MPFX194	2	V	F3	P10	N	B	P01

Series and size

MPFX184 | **MPFX194** Filter element with private spigot

Length	Size 184	Size 194
1	•	
2	•	•

Seals and treatments

A	NBR		**W**	NBR	head anodized
V	FPM		**Z**	FPM	head anodized

Main Connections		Rear connections
G1	G 1 1/4"	-
G2	G 1 1/4"	G 1 1/4"
G4	1 1/4" NPT	-
G5	1 1/4" NPT	1 1/4" NPT
G7	SAE 20 - 1 5/8" - 12 UN	-
G8	SAE 20 - 1 5/8" - 12 UN	SAE 20 - 1 5/8" - 12 UN
G10	SAE 24 - 1 7/8" - 12 UN	-
G11	SAE 24 - 1 7/8" - 12 UN	SAE 20 - 1 5/8" - 12 UN

Main Connections		Rear connections
G13	G 1 1/2"	-
G14	G 1 1/2"	G 1 1/4"
G15	1 1/2" NPT	-
G16	1 1/2" NPT	1 1/4" NPT
F1	1 1/2" SAE 3000 psi/M	-
F2	1 1/2" SAE 3000 psi/UNC	-
F3	1 1/2" SAE 3000 psi/M	1 1/2" SAE 3000 psi/M
F4	1 1/2" SAE 3000 psi/UNC	1 1/2" SAE 3000 psi/UNC

Filtration rating (filter media)

A03	Inorganic microfiber 3 µm	**M25**	Wire mesh 25 µm
A06	Inorganic microfiber 6 µm	**M60**	Wire mesh 60 µm
A10	Inorganic microfiber 10 µm	**M90**	Wire mesh 90 µm
A16	Inorganic microfiber 16 µm	**P10**	Resin impregnated paper 10 µm
A25	Inorganic microfiber 25 µm	**P25**	Resin impregnated paper 25 µm

Element Δp		Filter media Axx	Mxx	Pxx
N	10 bar		•	•
H	10 bar	•		
W	10 bar, compatible with fluids HFA, HFB and HFC	•	•	

Bypass valve

E	3 bar
B	1.75 bar

Execution

P01	MP Filtri standard
Pxx	Customized

FILTER ELEMENT

Configuration example 1:	MFX180	1	A25	H	B	E	P01
Configuration example 2:	MFX180	2	P10	N	V		P01

Element series and size

MFX180 Filter element with private spigot

Element length

1

2

Filtration rating (filter media)

A03	Inorganic microfiber 3 µm	**M25**	Wire mesh 25 µm
A06	Inorganic microfiber 6 µm	**M60**	Wire mesh 60 µm
A10	Inorganic microfiber 10 µm	**M90**	Wire mesh 90 µm
A16	Inorganic microfiber 16 µm	**P10**	Resin impregnated paper 10 µm
A25	Inorganic microfiber 25 µm	**P25**	Resin impregnated paper 25 µm

Element Δp		Filter media Axx	Mxx	Pxx
N	10 bar		•	•
H	10 bar	•		
W	10 bar, compatible with fluids HFA, HFB and HFC	•	•	

Seals

B	NBR
V	FPM

Bypass valve

E	3 bar
	1.75 bar

Execution

P01	MP Filtri standard
Pxx	Customized

ACCESSORIES

Indicators		page
BVA	Axial pressure gauge	240
BVR	Radial pressure gauge	240
BVP	Visual pressure indicator with automatic reset	241
BVQ	Visual pressure indicator with manual reset	241
BEA	Electrical pressure indicator	239
BEM	Electrical pressure indicator	239
BLA	Electrical / visual pressure indicator	239-240

Additional features		page
TE	Extension tube	248
T5	Filler plug M30x1.5	249

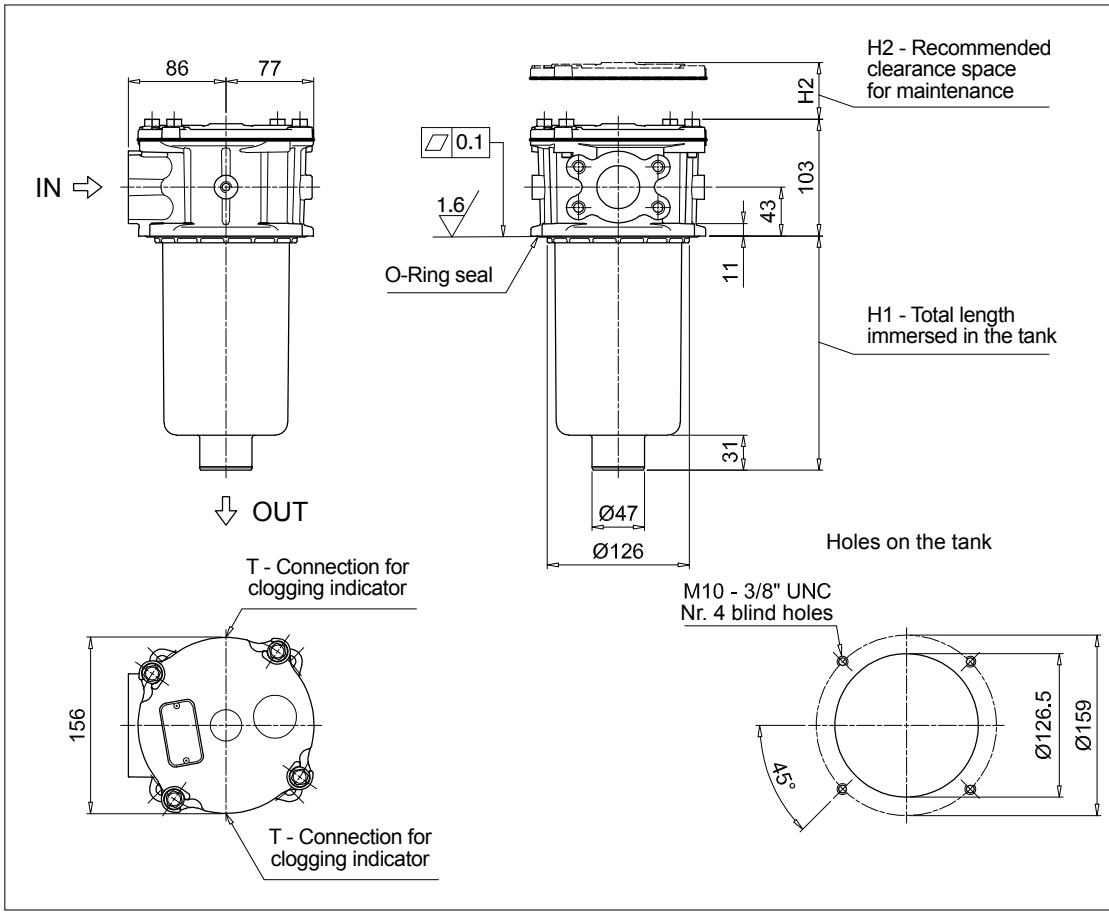

MPFX184

1 connection port

Filter length	H1 [mm]	H2 [mm]
1	232	260
2	445	480

Connection	T
G1	G 1/8"
G4 - G7 - G10	1/8" NPT
G13	G 1/8"
G15 - F1 - F2	1/8" NPT

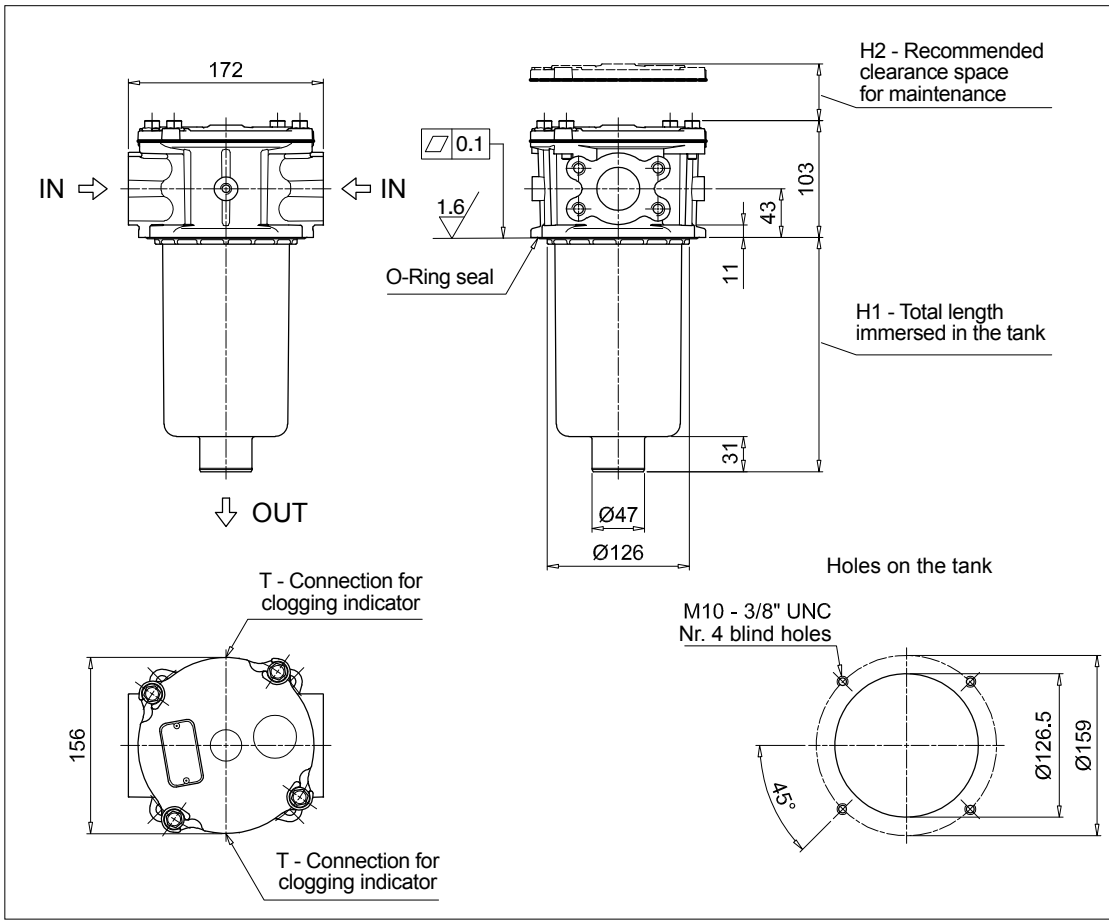

MPFX184

2 connection ports

Filter length	H1 [mm]	H2 [mm]
1	232	260
2	445	480

Connection	T
G2	G 1/8"
G5 - G8 - G11	1/8" NPT
G14	G 1/8"
G16 - F3 - F4	1/8" NPT

Dimensions

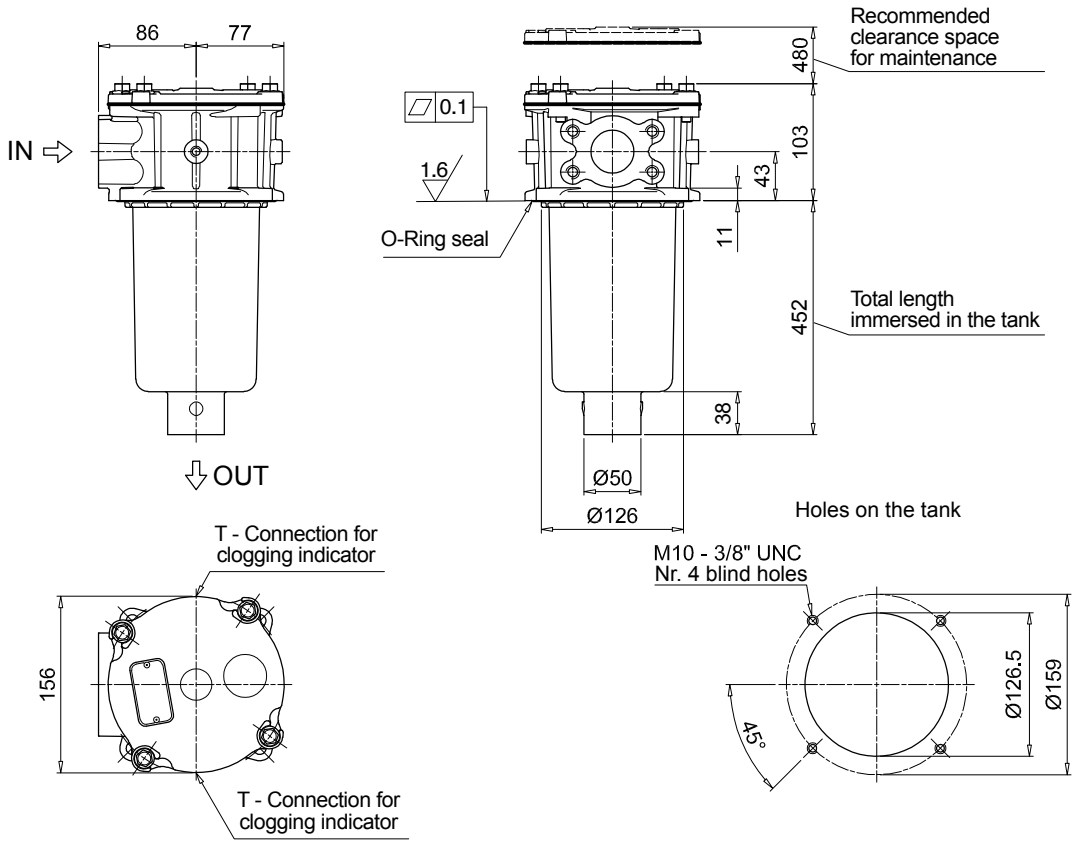

MPFX194	
1 connection port	
Connections	**T**
G1	G 1/8”
G4 - G7 - G10	1/8” NPT
G13	G 1/8”
G15 - F1 - F2	1/8” NPT

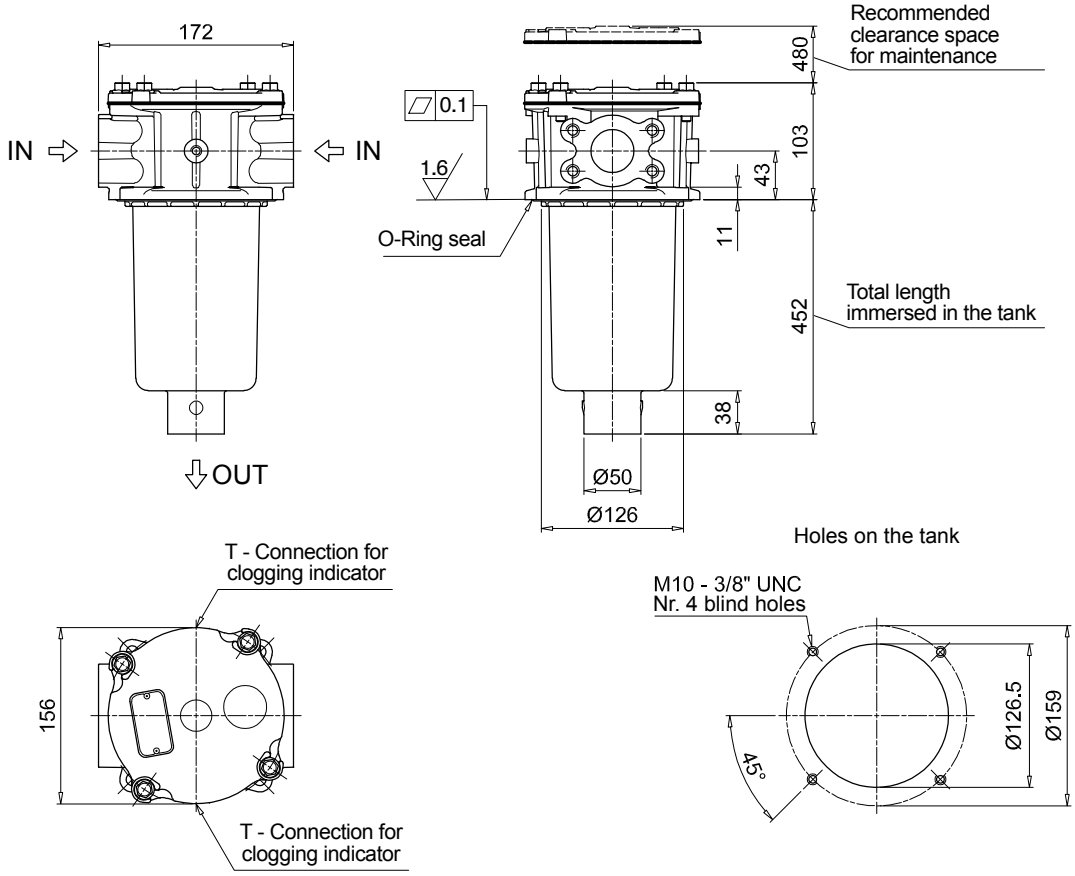

MPFX194	
2 connection ports	
Connections	**T**
G2	G 1/8”
G5 - G8 - G11	1/8” NPT
G14	G 1/8”
G16 - F3 - F4	1/8” NPT

MPFX MPFX400

Designation & Ordering code

COMPLETE FILTER

Configuration example 1:	MPFX400	1	A	G9	A25	H	B	P01
Configuration example 2:	MPFX400	2	V	G4	P10	N	E	P01

Series and size

MPFX400 Filter element with private spigot

Length

1 | **2** | **3** |

Seals and treatments

A	NBR
V	FPM
W	NBR head anodized
Z	FPM head anodized

Connections

G1	G 1 1/4”	**G6**	2” NPT
G2	G 1 1/2”	**G7**	SAE 20 - 1 5/8” - 12 UN
G3	G 2”	**G8**	SAE 24 - 1 7/8” - 12 UN
G4	1 1/4” NPT	**G9**	SAE 32 - 2 1/2” - 12 UN
G5	1 1/2” NPT		

Filtration rating (filter media)

A03	Inorganic microfiber 3 µm	**M25**	Wire mesh 25 µm
A06	Inorganic microfiber 6 µm	**M60**	Wire mesh 60 µm
A10	Inorganic microfiber 10 µm	**M90**	Wire mesh 90 µm
A16	Inorganic microfiber 16 µm	**P10**	Resin impregnated paper 10 µm
A25	Inorganic microfiber 25 µm	**P25**	Resin impregnated paper 25 µm

Element Δp		Filter media Axx	Mxx	Pxx
N	10 bar		•	•
H	10 bar	•		
W	10 bar, compatible with fluids HFA, HFB and HFC	•	•	

Bypass valve

E	3 bar
B	1.75 bar

Execution

P01	MP Filtri standard
Pxx	Customized

FILTER ELEMENT

Configuration example 1:	MFX400	1	A25	H	B		P01
Configuration example 2:	MFX400	2	P10	N	V	E	P01

Element series and size

MFX400 Filter element with private spigot

Element length

1 | **2** | **3** |

Filtration rating (filter media)

A03	Inorganic microfiber 3 µm	**M25**	Wire mesh 25 µm
A06	Inorganic microfiber 6 µm	**M60**	Wire mesh 60 µm
A10	Inorganic microfiber 10 µm	**M90**	Wire mesh 90 µm
A16	Inorganic microfiber 16 µm	**P10**	Resin impregnated paper 10 µm
A25	Inorganic microfiber 25 µm	**P25**	Resin impregnated paper 25 µm

Element Δp		Filter media Axx	Mxx	Pxx
N	10 bar		•	•
H	10 bar	•		
W	10 bar, compatible with fluids HFA, HFB and HFC	•	•	

Seals

B	NBR
V	FPM

Bypass valve

E	3 bar
	1.75 bar

Execution

P01	MP Filtri standard
Pxx	Customized

ACCESSORIES

Indicators

		page
BVA	Axial pressure gauge	240
BVR	Radial pressure gauge	240
BVP	Visual pressure indicator with automatic reset	241
BVQ	Visual pressure indicator with manual reset	241
BEA	Electrical pressure indicator	239
BEM	Electrical pressure indicator	239
BLA	Electrical / visual pressure indicator	239-240

Additional features

		page
T5	Filler plug M30x1.5	249

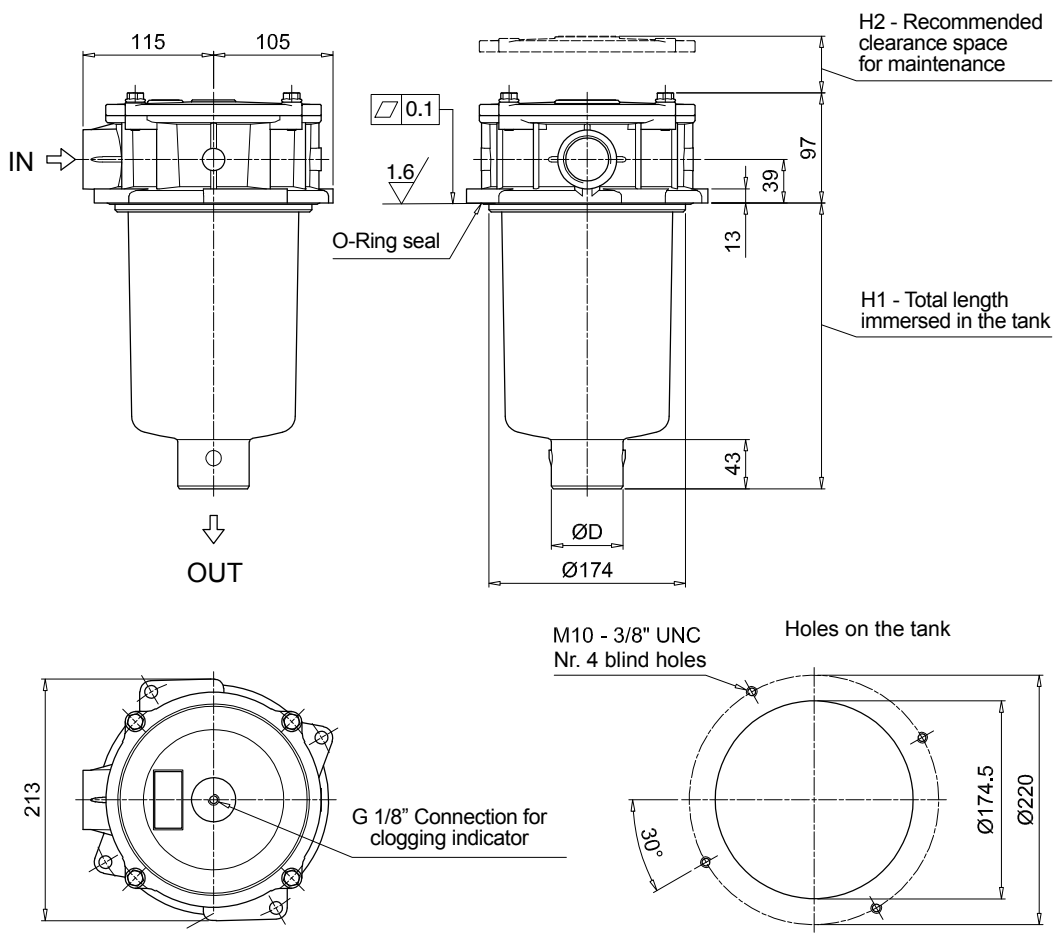

MPFX400			
Filter length	H1 [mm]	H2 [mm]	D [mm]
1	187	210	50
2	252	270	63
3	300	315	63

MPFX MPFX410

Designation & Ordering code

COMPLETE FILTER

Configuration example 1:	MPFX410	1	V	G4	1	P10	N	E	P01
Configuration example 2:	MPFX410	1	A	G1	1	A25	H	B	P01

Series and size

MPFX410 Filter element with private spigot

Length

1 | **2** | **3** |

Seals and treatments

A	NBR
V	FPM
W	NBR head anodized
Z	FPM head anodized

Main Connections		Aux size 1
G1	G 1 1/4"	G 1"
G4	1 1/4" NPT	1" NPT
G7	SAE 20 - 1 5/8" - 12 UN	SAE 16 - 1 5/16"- 12 UN

Aux connection - see previous table

1	Aux size 1

Filtration rating (filter media)

A03	Inorganic microfiber 3 µm	**M25**	Wire mesh 25 µm
A06	Inorganic microfiber 6 µm	**M60**	Wire mesh 60 µm
A10	Inorganic microfiber 10 µm	**M90**	Wire mesh 90 µm
A16	Inorganic microfiber 16 µm	**P10**	Resin impregnated paper 10 µm
A25	Inorganic microfiber 25 µm	**P25**	Resin impregnated paper 25 µm

Element Δp		Filter media Axx	Mxx	Pxx
N	10 bar		•	•
H	10 bar	•		
W	10 bar, compatible with fluids HFA, HFB and HFC	•	•	

Bypass valve

E	3 bar
B	1.75 bar

Execution

P01	MP Filtri standard
Pxx	Customized

FILTER ELEMENT

Configuration example 1:	MFX400	1	P10	N	V	E	P01
Configuration example 2:	MFX400	1	A25	H	B		P01

Element series and size

MFX400 Filter element with private spigot

Element length

1 | **2** | **3** |

Filtration rating (filter media)

A03	Inorganic microfiber 3 µm	**M25**	Wire mesh 25 µm
A06	Inorganic microfiber 6 µm	**M60**	Wire mesh 60 µm
A10	Inorganic microfiber 10 µm	**M90**	Wire mesh 90 µm
A16	Inorganic microfiber 16 µm	**P10**	Resin impregnated paper 10 µm
A25	Inorganic microfiber 25 µm	**P25**	Resin impregnated paper 25 µm

Element Δp		Filter media Axx	Mxx	Pxx
N	10 bar		•	•
H	10 bar	•		
W	10 bar, compatible with fluids HFA, HFB and HFC	•	•	

Seals

B	NBR
V	FPM

Bypass valve

E	3 bar
	1.75 bar

Execution

P01	MP Filtri standard
Pxx	Customized

ACCESSORIES

Indicators		page
BVA	Axial pressure gauge	240
BVR	Radial pressure gauge	240
BVP	Visual pressure indicator with automatic reset	241
BVQ	Visual pressure indicator with manual reset	241

		page
BEA	Electrical pressure indicator	239
BEM	Electrical pressure indicator	239
BLA	Electrical / visual pressure indicator	239-240

Additional features		page
T5	Filler plug M30x1.5	249

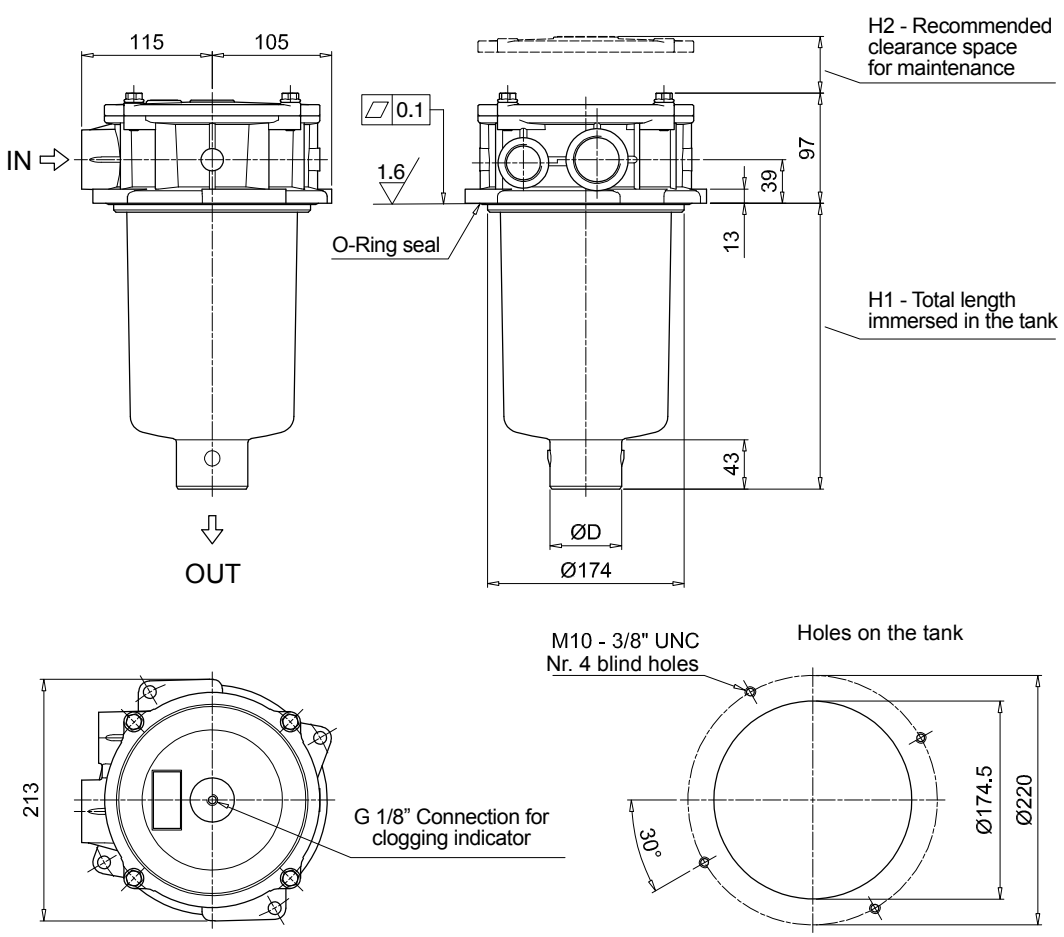

MPFX410			
Filter length	H1 [mm]	H2 [mm]	D [mm]
1	187	210	50
2	252	270	63
3	300	315	63

MPFX MPFX450 - MPFX451 - MPFX750

Designation & Ordering code

COMPLETE FILTER

Configuration example 1:	MPFX450	1	A	G1	A25	H	B	P01
Configuration example 2:	MPFX750	1	V	F2	P10	N	E	P01

Series and size

MPFX450 | **MPFX451** | **MPFX750** Filter element with private spigot

Length	MPFX 450	MPFX 451	MPFX 750
1	•	•	•
2	•	•	
3	•	•	

Seals and treatments

A	NBR	**W**	NBR	head anodized
V	FPM	**Z**	FPM	head anodized

Connections		Aux (only size 451)
G1	G 2”	G 3/4”
G4	2” NPT	3/4” NPT
G7	SAE 32 - 2 1/2” - 12 UN	SAE 12 - 1 1/16” - 12 UN
F1	2” SAE 3000 psi/M	G 3/4”
F2	2” SAE 3000 psi/UN	3/4” NPT

Filtration rating (filter media)

A03	Inorganic microfiber	3 µm	**M25**	Wire mesh	25 µm
A06	Inorganic microfiber	6 µm	**M60**	Wire mesh	60 µm
A10	Inorganic microfiber	10 µm	**M90**	Wire mesh	90 µm
A16	Inorganic microfiber	16 µm	**P10**	Resin impregnated paper	10 µm
A25	Inorganic microfiber	25 µm	**P25**	Resin impregnated paper	25 µm

Element Δp		Filter media Axx	Mxx	Pxx
N	10 bar		•	•
H	10 bar	•		
W	10 bar, compatible with fluids HFA, HFB and HFC	•	•	

Bypass valve	
E	3 bar
B	1.75 bar

Execution	
P01	MP Filtri standard
Pxx	Customized

FILTER ELEMENT

Configuration example 1:	MFX400	1	A25	H	B		P01
Configuration example 2:	MFX750	1	P10	N	V	E	P01

Element series and size

MFX400 | **MFX750** Filter element with private spigot

Element length	MPFX 450	MPFX 451	MPFX 750
1	•	•	•
2	•	•	
3	•	•	

Filtration rating (filter media)

A03	Inorganic microfiber	3 µm	**M25**	Wire mesh	25 µm
A06	Inorganic microfiber	6 µm	**M60**	Wire mesh	60 µm
A10	Inorganic microfiber	10 µm	**M90**	Wire mesh	90 µm
A16	Inorganic microfiber	16 µm	**P10**	Resin impregnated paper	10 µm
A25	Inorganic microfiber	25 µm	**P25**	Resin impregnated paper	25 µm

Element Δp		Filter media Axx	Mxx	Pxx
N	10 bar		•	•
H	10 bar	•		
W	10 bar, compatible with fluids HFA, HFB and HFC	•	•	

Seals	
B	NBR
V	FPM

Bypass valve	
E	3 bar
	1.75 bar

Execution	
P01	MP Filtri standard
Pxx	Customized

ACCESSORIES

Indicators		page
BVA	Axial pressure gauge	240
BVR	Radial pressure gauge	240
BVP	Visual pressure indicator with automatic reset	241
BVQ	Visual pressure indicator with manual reset	241
BEA	Electrical pressure indicator	239
BEM	Electrical pressure indicator	239
BLA	Electrical / visual pressure indicator	239-240

Additional features		page
T5	Filler plug M30x1.5	249

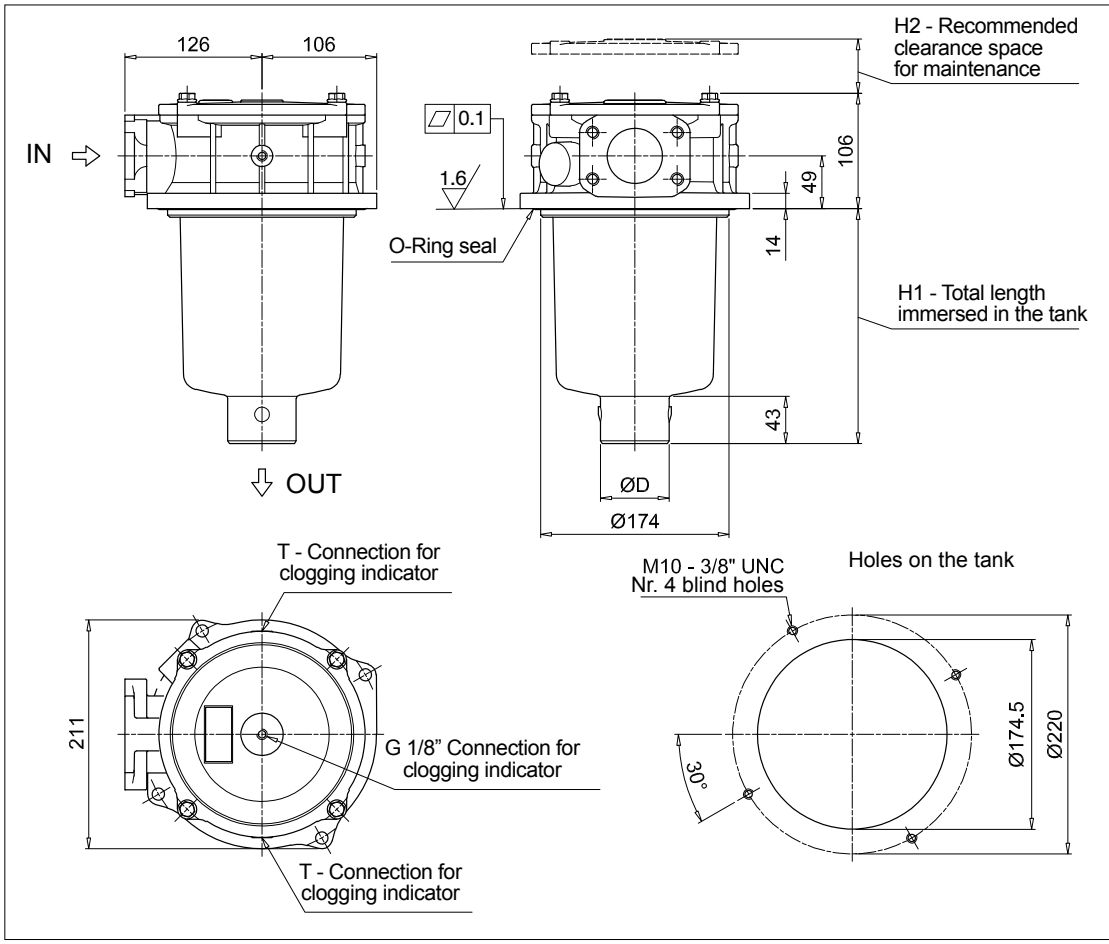

MPFX450

Filter length	H1 [mm]	H2 [mm]	D [mm]
1	187	210	50
2	252	270	63
3	300	315	63

Connections	T
G1	G 1/8”
G4 - G7	1/8” NPT
F1	G 1/8”
F2	1/8” NPT

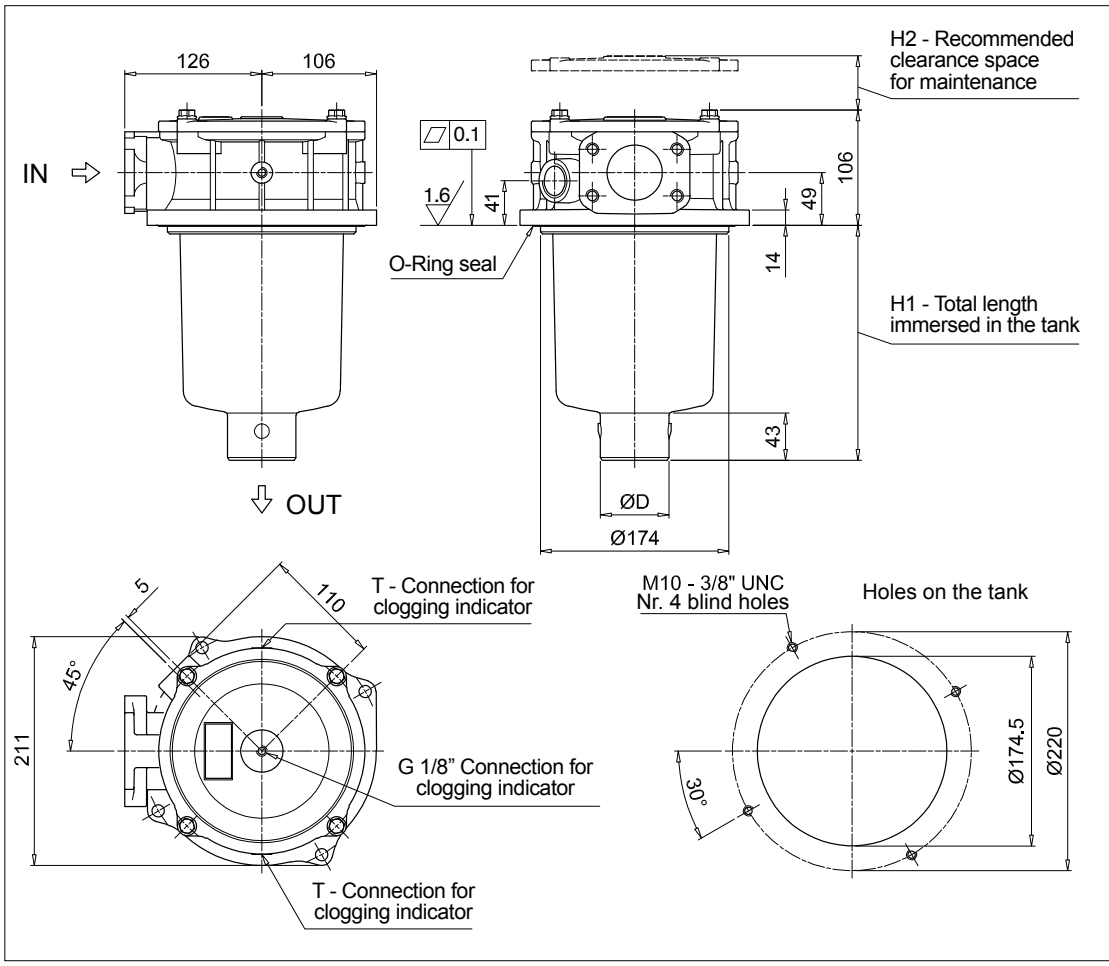

MPFX451

Filter length	H1 [mm]	H2 [mm]	D [mm]
1	187	210	50
2	252	270	63
3	300	315	63

Connections	T
G1	G 1/8”
G4 - G7	1/8” NPT
F1	G 1/8”
F2	1/8” NPT

Dimensions

MPFX750

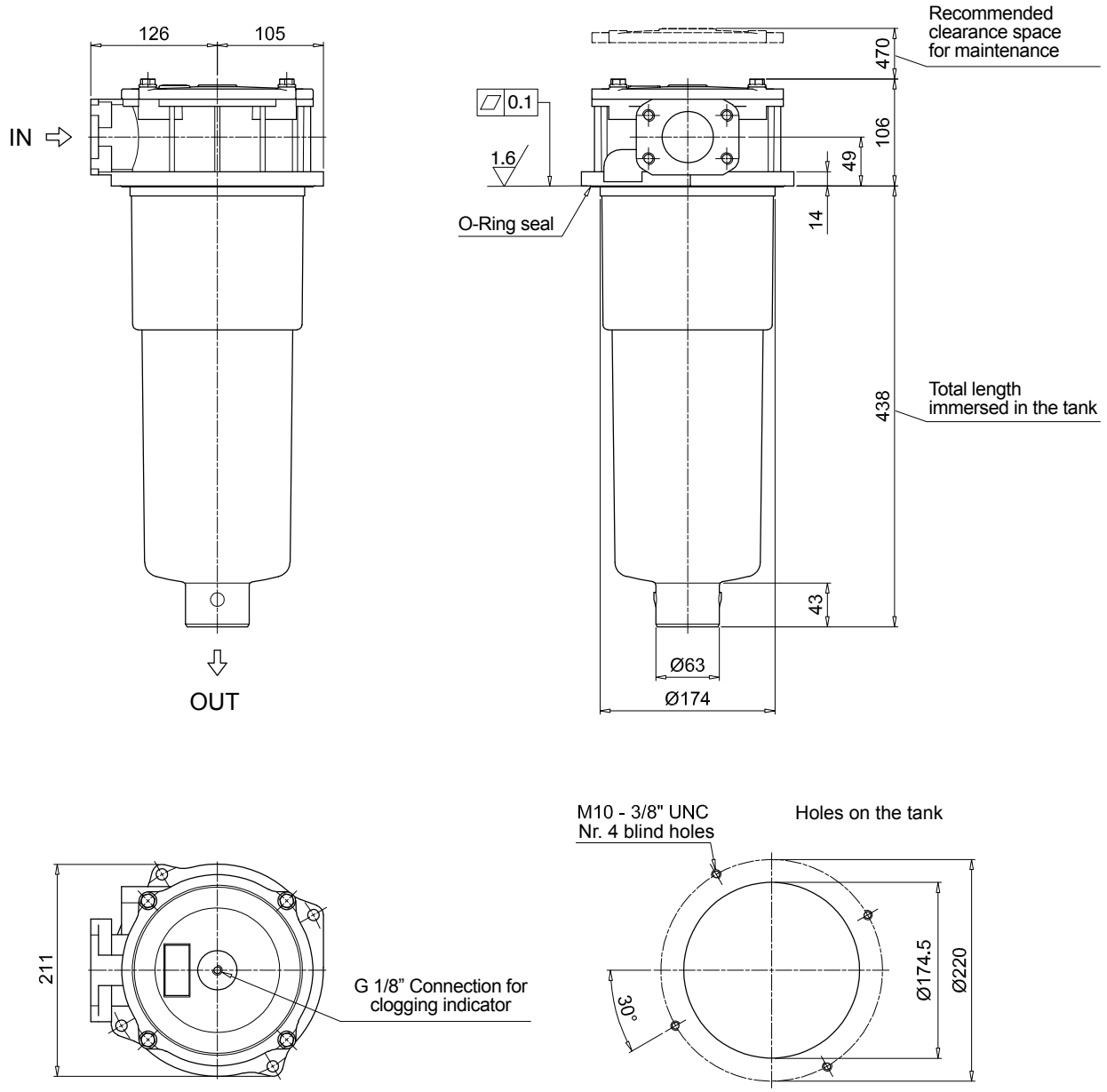

Order number for spare parts

MPFX 100

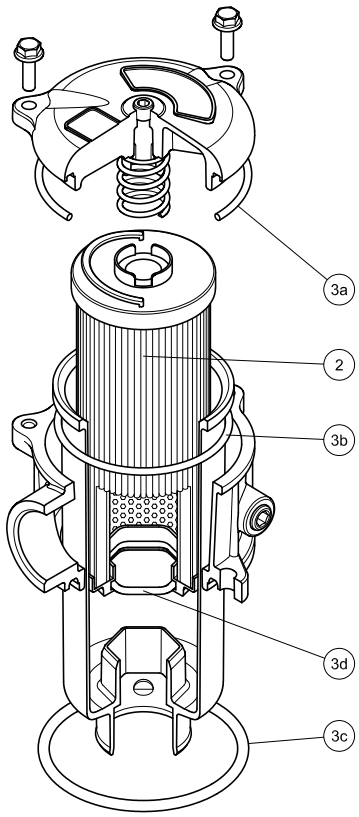

MPFX 181

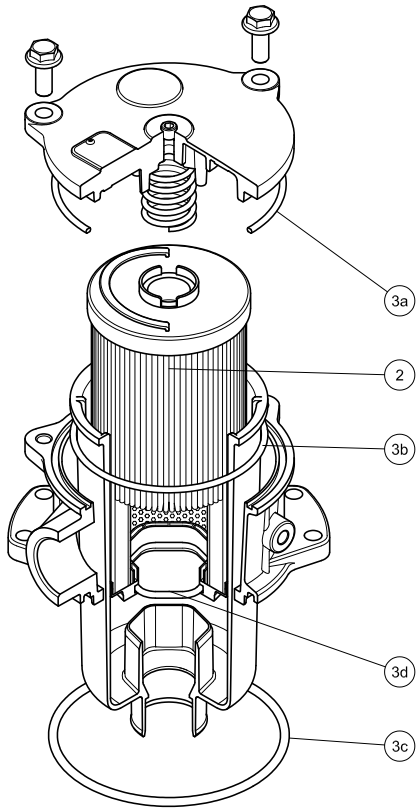

O-RING SEAL

Item:	Q.ty: 1 pc. 2	Q.ty: 1 pc. 3 (3a ÷ 3d)	
Filter series	**Filter element**	**Seal Kit code number NBR**	**FPM**
MPFX 030	See order table	02050675	02050676
MPFX 100-110		02050677	02050678
MPFX 181-182		02050681	02050682
MPFX 184		02050685	02050686
MPFX 191-192		02050683	02050684
MPFX 194		02050687	02050688
MPFX 400-410		02050695	02050696
MPFX 450-451		02050697	02050698
MPFX 750		02050699	02050700

MPFX 104

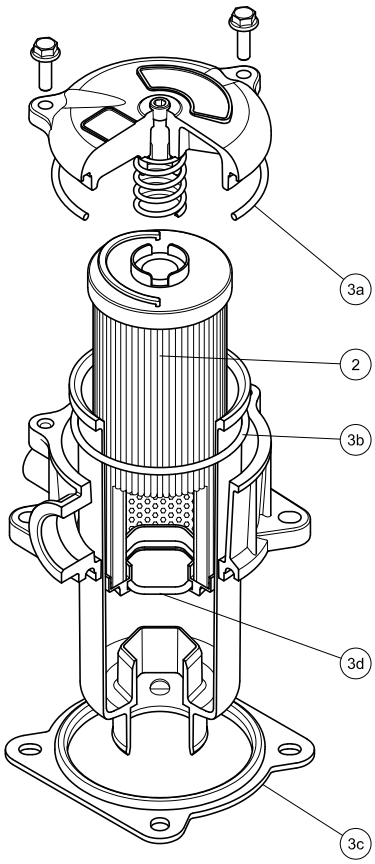

MPFX 181

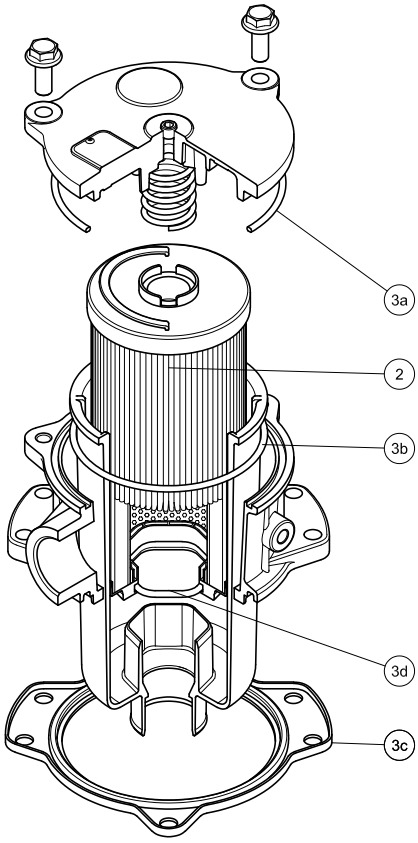

FLAT SEAL

Item:	Q.ty: 1 pc. 2	Q.ty: 1 pc. 3 (3a ÷ 3d)	
Filter series	**Filter element**	**Seal Kit code number NBR**	**FPM**
MPFX 104	See order table	02050679	02050680
MPFX 181-182		02050691	02050692
MPFX 191-192		02050691	02050692

MPLX series

Maximum working pressure up to 1 MPa (10 bar) - Flow rate up to 1800 l/min

MPLX GENERAL INFORMATION

Description

Return filter

Maximum working pressure up to 1 MPa (10 bar)
Flow rate up to 1800 l/min

MPLX is a range of return filters for protection of the reservoir against the system contamination.
Completely interchangeable with Pall 8420 & 8520, they are directly fixed to the reservoir, in immersed or semi-immersed position.
The use of the diffuser is recommended, to place the filter output always immersed into the fluid to avoid aeration or foam generation into the reservoir.
The filter output must be always immersed into the fluid to avoid aeration or foam generation into the reservoir.

Available features:
- Flanged connections up to 3", for a maximum flow rate of 1800 l/min
- Fine filtration rating, to get a good cleanliness level into the reservoir
- Bypass valve, to relieve excessive pressure drop across the filter media
- 6 fixing holes for installation, to suit a variety of reservoir surfaces
- Diffuser, to reduce the risk of aeration, foaming and noise
- Filler plug, to fill cleaned fluid into the tank without an additional connection
- Visual, electrical and electronic differential clogging indicators

Common applications:
- Heavy duty industrial equipment
- Heavy duty mobile equipment

Technical data

Filter housing materials
- Head: Anodized aluminium
- Cover: Anodized aluminium
- Bowl: Phosphatized steel
- Bypass valve: Steel

Bypass valve
- Opening pressure 450 kPa (4.5 bar) ±10%

Δp element type
- Microfiber filter elements: 10 bar
- Fluid flow through the filter element from OUT to IN.

Seals
- Standard NBR series A
- Optional FPM series V

Temperature
From -25 °C to +110 °C

Note
MPLX filters are provided for vertical mounting

Weights [kg] and volumes [dm³]

Filter series	Weights [kg]		Volumes [dm³]	
	Length	2	Length	2
MPLX 250		8.95		2.90
MPLX 660		20.20		11.00

FILTER ASSEMBLY SIZING
Flow rates [l/min]

Filter series	Length	Filter element design - N Series						
		A03	A06	A10	A16	A25	M25 M60 M90	P10 P25
MPLX 250	**2**	157	155	281	312	325	583	392
MPLX 660	**2**	376	384	820	925	1018	1732	1332

Maximum flow rate for a complete return filter with a pressure drop Δp = 0.5 bar.
The reference fluid has a kinematic viscosity of 30 mm^2/s (cSt) and a density of 0.86 kg/dm^3.
For different pressure drop or fluid viscosity we recommend to use our selection software available on www.mpfiltri.com.
You can also calculate the right size using the formulas present on the FILTER SIZING paragraph at the beginning of the full catalogue or at the beginning of the filter family brochure.
Please, contact our Sales Department for further additional information.

Hydraulic symbols

Filter series	Style 1 connection + Diff. indic.
MPLX 250	•
MPLX 660	•

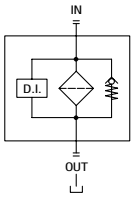

Pressure drop

Filter housings
Δp pressure drop

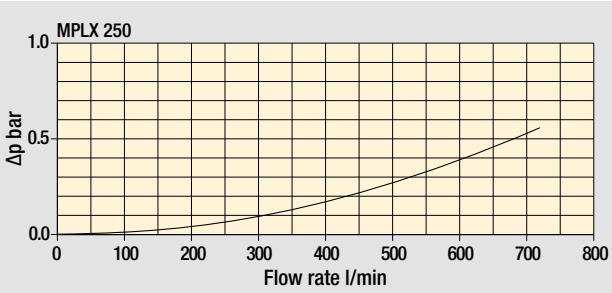

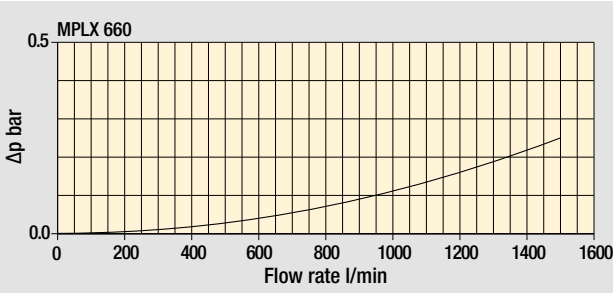

Bypass valve
pressure drop

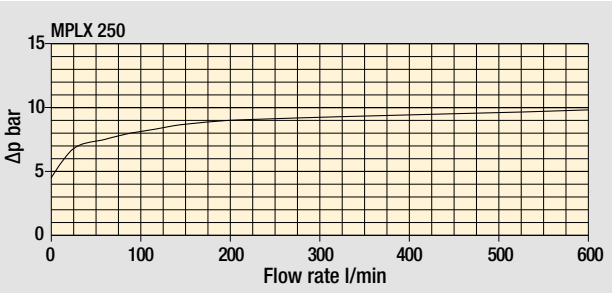

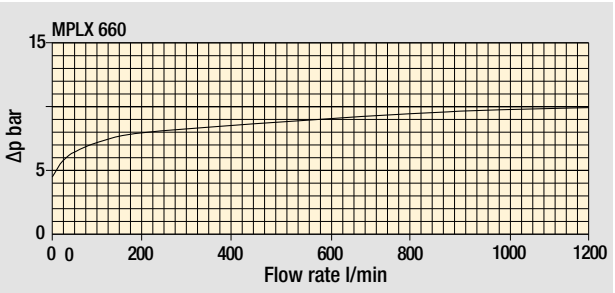

The curves are plotted using mineral oil with density of 0.86 kg/dm^3 in compliance with ISO 3968. Δp varies proportionally with density.

MPLX MPLX250 - MPLX660

Designation & Ordering code

COMPLETE FILTER

Configuration example 1:	MPLX250	2	D	S	W	A	6	M25	P01
Configuration example 2:	MPLX660	2	D	D	A	B	6	A10	P01

Series and size

MPLX250 Filter element with private spigot
MPLX660 Filter element with private spigot

Length

2

By-pass valve

D 4.5 bar

Diffuser

S Without diffuser
D With standard diffuser

Seals and treatments

		Filtration rating Axx	Mxx	Pxx
A	NBR	•	•	•
V	FPM	•	•	•
W	NBR (filter element compatible with fluids HFA-HFB-HFC)	•	•	
Z	FPM (filter element compatible with fluids HFA-HFB-HFC)	•	•	

Connections

	MPLX250	MPLX660
A	2” SAE 3000 psi/M	3” SAE 3000 psi/M
B	2” SAE 3000 psi/UNC	3” SAE 3000 psi/UNC

Connection for differential indicator

6 With plugged connection

Filtration rating (filter media)

A03	Inorganic microfiber 3 µm	**M25**	Wire mesh 25 µm
A06	Inorganic microfiber 6 µm	**M60**	Wire mesh 60 µm
A10	Inorganic microfiber 10 µm	**M90**	Wire mesh 90 µm
A16	Inorganic microfiber 16 µm	**P10**	Resin impregnated paper 10 µm
A25	Inorganic microfiber 25 µm	**P25**	Resin impregnated paper 25 µm

Execution

P01 MP Filtri standard
Pxx Customized

FILTER ELEMENT

Configuration example 1:	MLX250	2	M25	W	P01
Configuration example 2:	MLX660	2	A10	A	P01

Element series and size

MLX250 Filter element with private spigot
MLX660 Filter element with private spigot

Element length

2

Filtration rating (filter media)

A03	Inorganic microfiber 3 µm	**M25**	Wire mesh 25 µm
A06	Inorganic microfiber 6 µm	**M60**	Wire mesh 60 µm
A10	Inorganic microfiber 10 µm	**M90**	Wire mesh 90 µm
A16	Inorganic microfiber 16 µm	**P10**	Resin impregnated paper 10 µm
A25	Inorganic microfiber 25 µm	**P25**	Resin impregnated paper 25 µm

Seals and treatments

		Filtration rating Axx	Mxx	Pxx
A	NBR	•	•	•
V	FPM	•	•	•
W	NBR (filter element compatible with fluids HFA-HFB-HFC)	•	•	
Z	FPM (filter element compatible with fluids HFA-HFB-HFC)	•	•	

Execution

P01 MP Filtri standard
Pxx Customized

ACCESSORIES

Indicators

DEA	Electrical differential indicator	242
DEM	Electrical differential indicator	242-243
DLA	Electrical / visual differential indicator	243-244
DLE	Electrical / visual differential indicator	244
DTA	Electronic differential indicator	245
DVA	Visual differential indicator	245
DVM	Visual differential indicator	245

Additional features

T2	Plug	246

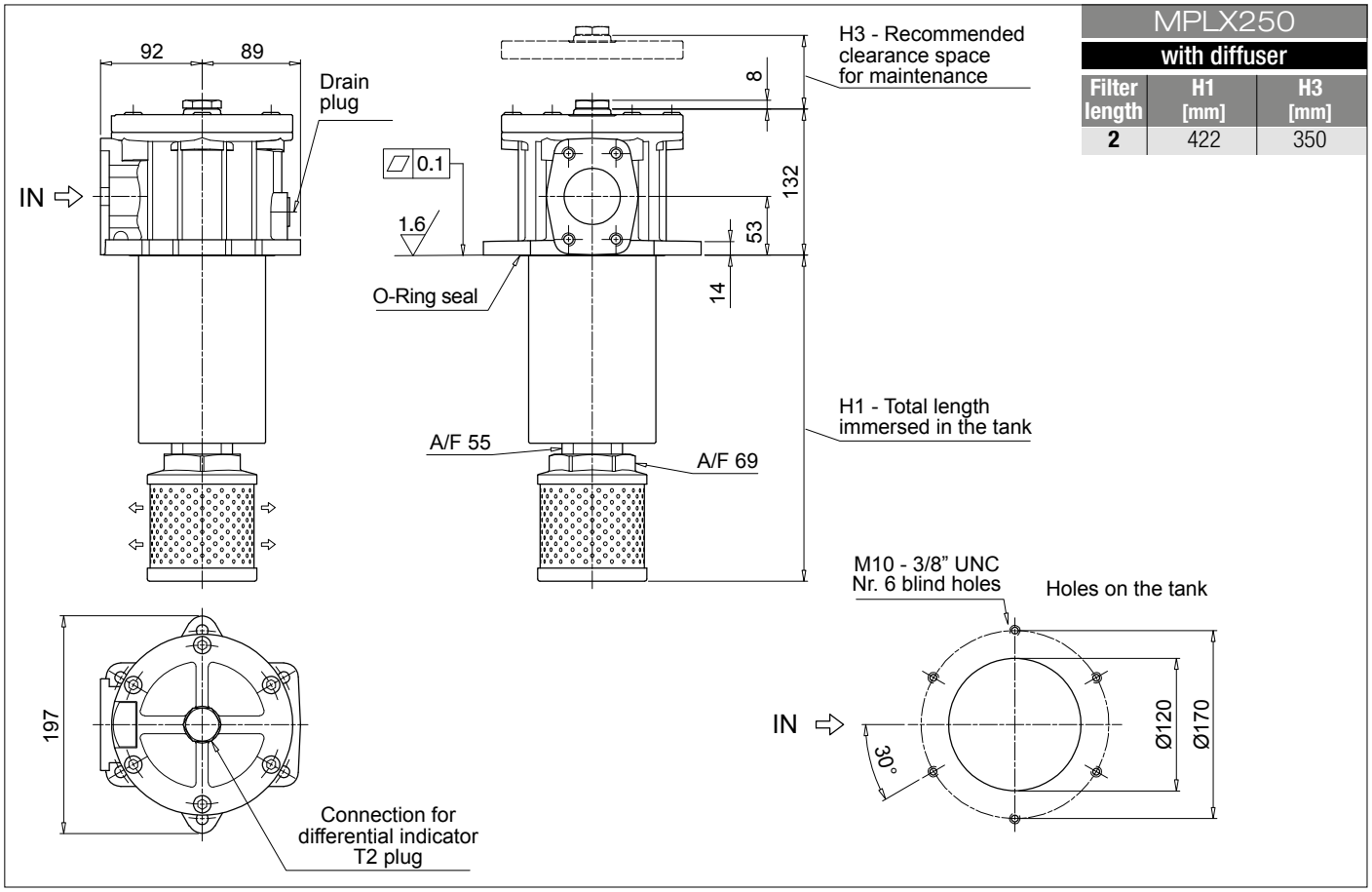

MPLX250 with diffuser		
Filter length	H1 [mm]	H3 [mm]
2	422	350

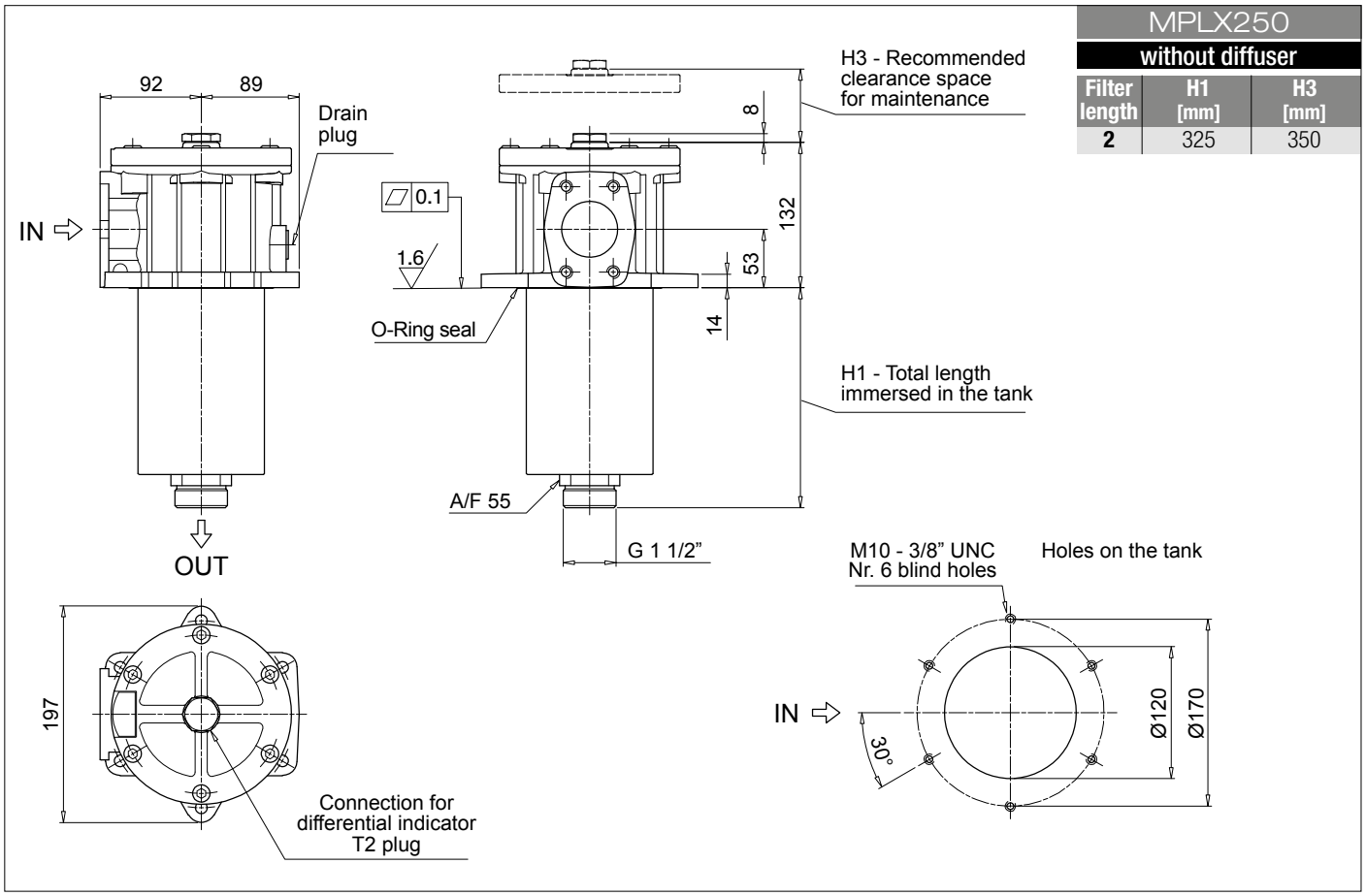

MPLX250 without diffuser		
Filter length	H1 [mm]	H3 [mm]
2	325	350

Dimensions

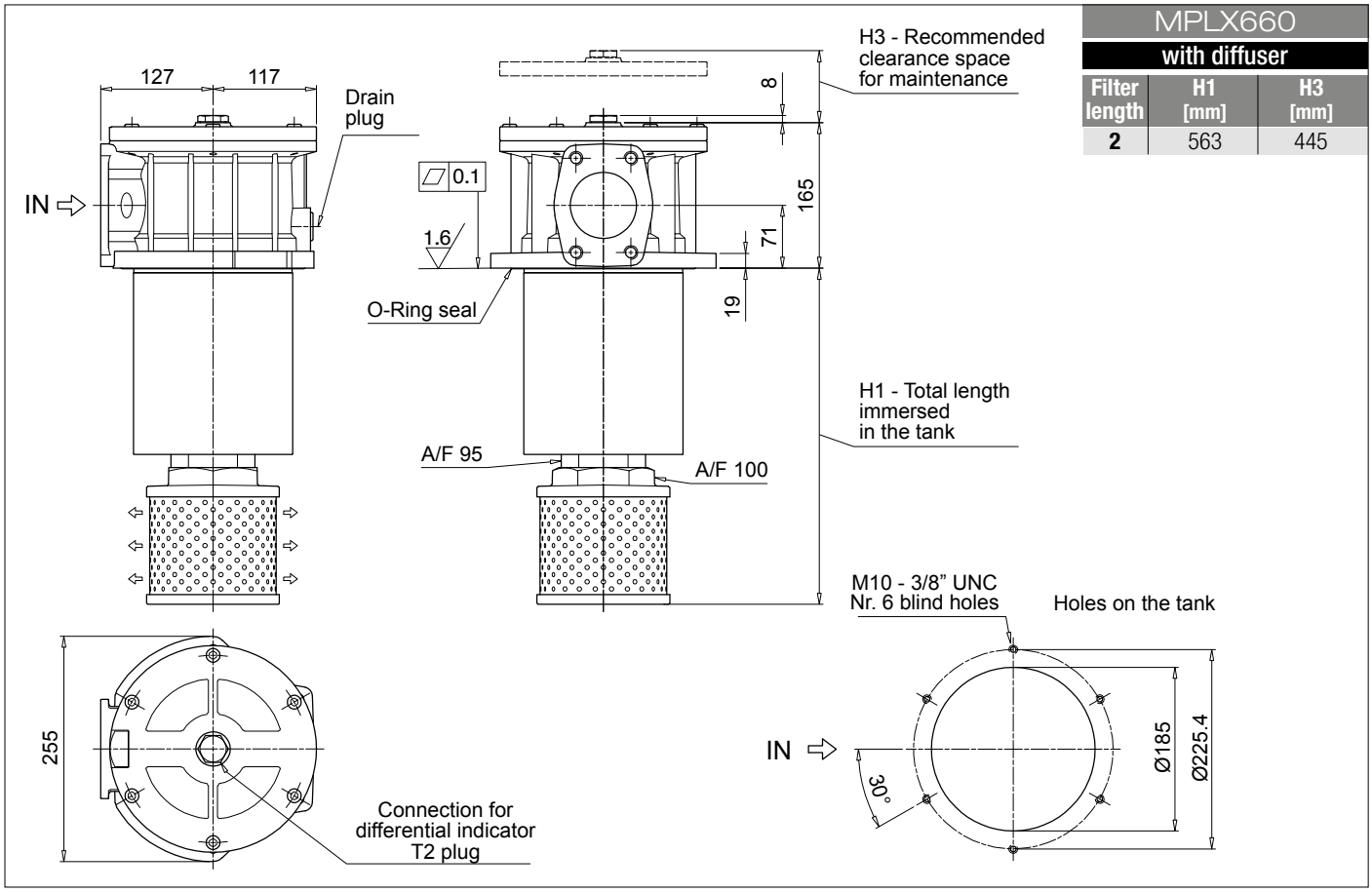

MPLX660 with diffuser		
Filter length	H1 [mm]	H3 [mm]
2	563	445

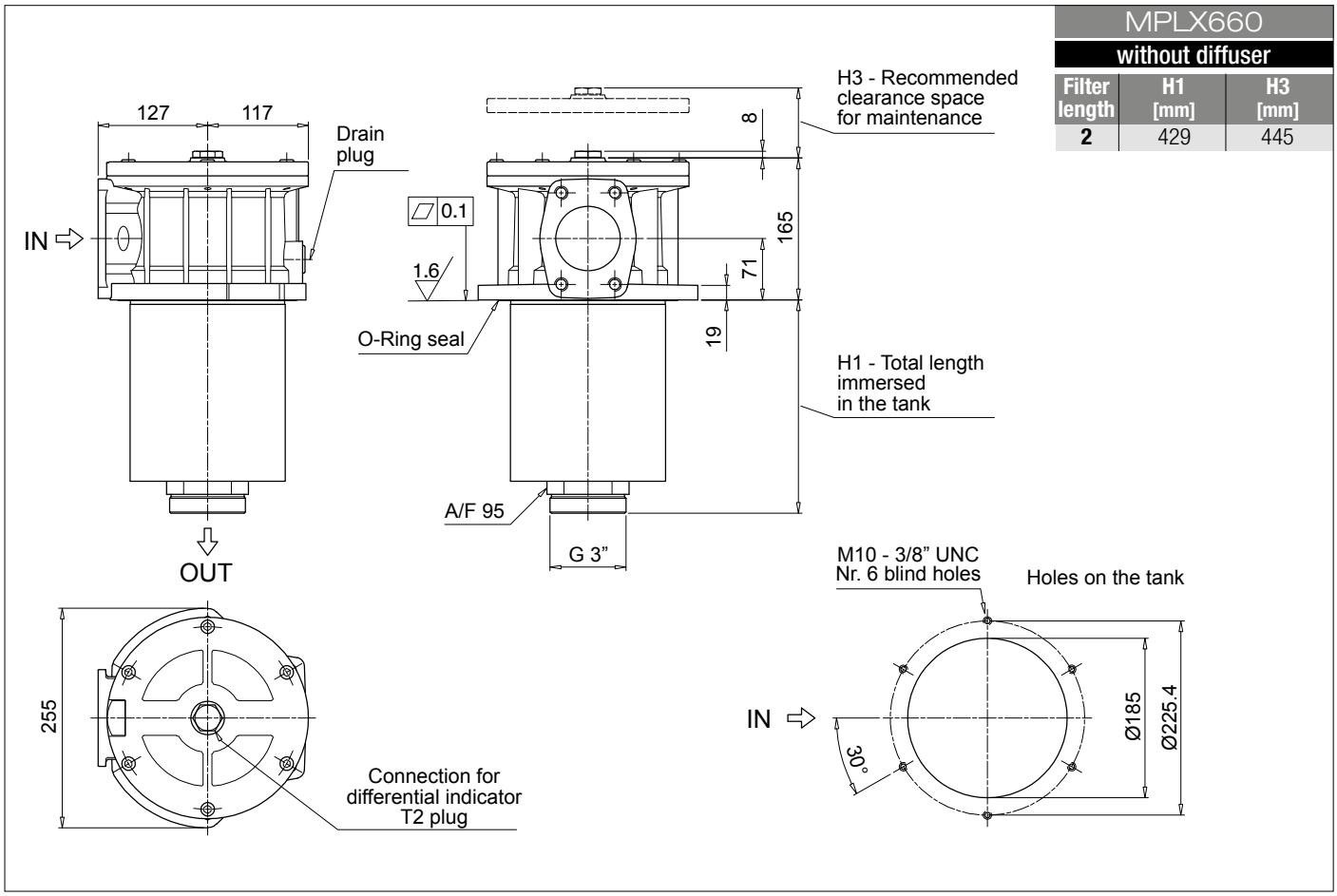

MPLX660 without diffuser		
Filter length	H1 [mm]	H3 [mm]
2	429	445

Order number for spare parts

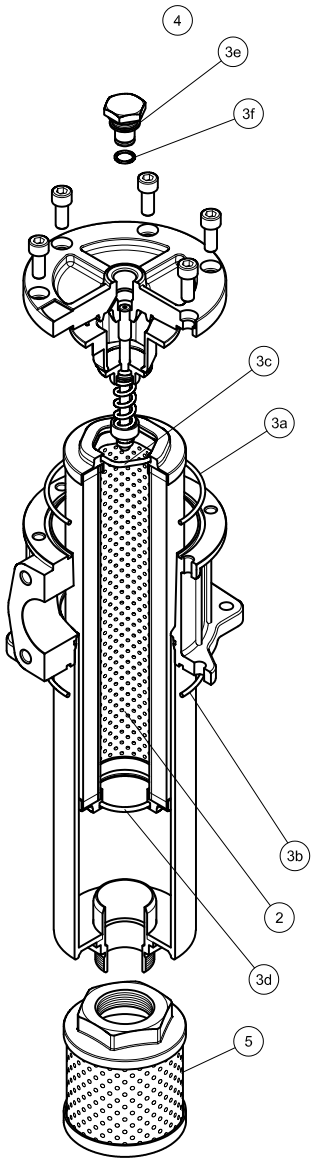

Item:	Q.ty: 1 pc. 2	Q.ty: 1 pc. 3 (3a ÷ 3f)		Q.ty: 1 pc. 4		Q.ty: 1 pc. 5
Filter series	**Filter element**	**Seal Kit code number NBR**	**FPM**	**Indicator connection plug NBR**	**FPM**	**Diffuser**
MPLX 250	See order table	02050745	02050746	T2H	T2V	STD 100 C 115 P01
MPLX 660		02050747	02050748			STD 150 E 155 P01

MPTX series

Maximum working pressure up to 800 kPa (8 bar) - Flow rate up to 300 l/min

MPTX GENERAL INFORMATION

Description

Return filter

Maximum working pressure up to 800 kPa (8 bar)
Flow rate up to 300 l/min

MPTX is a range of return filters with integrated breather filter, for protection of the reservoir against the system contamination.
They are directly fixed to the reservoir, in immersed or semi-immersed position.
The filter output must be always immersed into the fluid to avoid aeration or foam generation into the reservoir.

Available features:
- Female threaded connections up to 1 1/4", for a maximum flow rate of 300 l/min
- Multiple connections, to connect several return lines or drains
- Fine filtration rating, to get a good cleanliness level into the reservoir
- Bypass valve integrated into the filter element, to relieve excessive pressure drop across the filter media
- 2, 3 or 6 fixing holes for installation, to suit a variety of reservoir surfaces
- O-ring or Flat Seal to suit a variety of reservoir surfaces
- Screw-in cover with a special shape, to allow the filter element replacement without the use of specific tools
- Oil dipstick, to easily check the level of the fluid into the reservoir (sold as separate item)
- Extension tube, to be used in deep reservoirs (sold as separate item)
- Diffuser, to reduce the risk of aeration, foaming and noise (sold as separate item)
- Integrated breather filter, to clean the air that moves into the reservoir as result of the oil level fluctuation
- Integrated breather filter with pressurization valve, to clean the air that moves into the reservoir as result of the oil level fluctuation and to guarantee the pressurization into the reservoir
- Visual, electrical and electronic clogging indicators
- MYclean interface connection, to protect the product against non-original spare parts
- External protective wrap, to optimize the flow through the element and to save the element efficiency against non-proper handling

Common applications:
- Light industrial equipment
- Mobile application

Technical data

Filter housing materials
- Head: Aluminium
- Cover: Nylon
- Bowl: Nylon

Bypass valve
- Opening pressure 175 kPa (1.75 bar) ±10%
- Opening pressure 300 kPa (3 bar) ±10%

Δp element type
- Microfiber filter elements - series H: 10 bar
- Fluid flow through the filter element from OUT to IN

Seals
- Standard NBR series A
- Optional FPM series V

Temperature
From -25 °C to +110 °C

Note
MPTX filters are provided for vertical mounting

Weights [kg] and volumes [dm³]

Filter series	Weights [kg]					Volumes [dm³]				
	Length	1	2	3	4	Length	1	2	3	4
MPTX 025		0.41	0.45	0.50	-		0.24	0.35	0.42	-
MPTX 027		0.44	0.48	0.55	-		0.24	0.35	0.42	-
MPTX 110		1.00	1.05	1.15	1.40		0.72	0.93	1.28	1.74
MPTX 114		1.10	1.15	1.25	1.50		0.72	0.93	1.28	1.74
MPTX 116		1.10	1.15	1.25	1.50		0.72	0.93	1.28	1.74
MPTX 120		1.00	1.05	1.15	1.40		0.72	0.93	1.28	1.74

FILTER ASSEMBLY SIZING
Flow rates [l/min]

Filter series	Length	Filter element design - H series					Filter element design - N series		
		A03	A06	A10	A16	A25	M25 M60 M90	P10	P25
MPTX 025-027	**1**	7	10	23	28	42	59	51	54
	2	17	20	45	48	56	72	64	67
	3	21	24	50	55	59	76	74	75
MPTX 110-120 114-116	**1**	18	20	53	56	65	153	87	96
	2	28	38	65	75	95	158	111	123
	3	48	55	125	135	169	289	224	251
	4	79	89	180	185	198	306	264	289

Maximum flow rate for a complete return filter with a pressure drop Δp = 0.5 bar.
The reference fluid has a kinematic viscosity of 30 mm^2/s (cSt) and a density of 0.86 kg/dm^3.
For different pressure drop or fluid viscosity we recommend to use our selection software available on www.mpfiltri.com.
You can also calculate the right size using the formulas present on the FILTER SIZING paragraph at the beginning of the full catalogue or at the beginning of the filter family brochure.
Please, contact our Sales Department for further additional information.

Hydraulic symbols

Filter series	Style 1 connection	Style 2 connections	Style 3 connections
MPTX 025	•		
MPTX 027	•		
MPTX 110		•	
MPTX 114	•		
MPTX 116	•		
MPTX 120			•

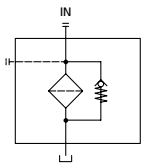

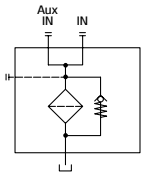

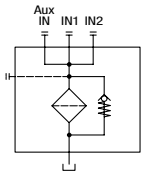

Pressure drop

Filter housings Δp pressure drop

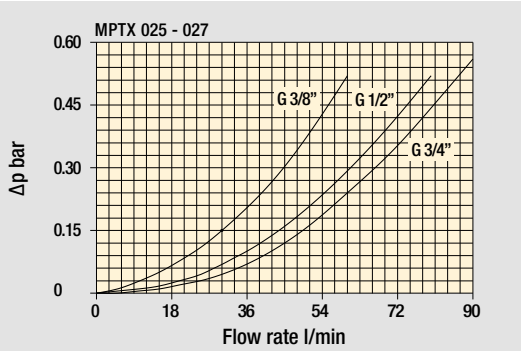

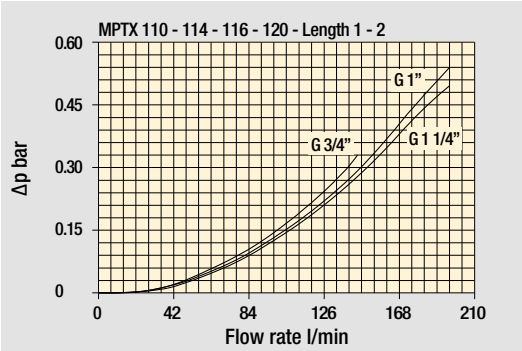

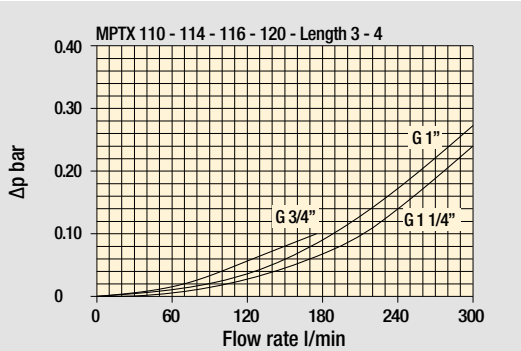

Bypass valve pressure drop

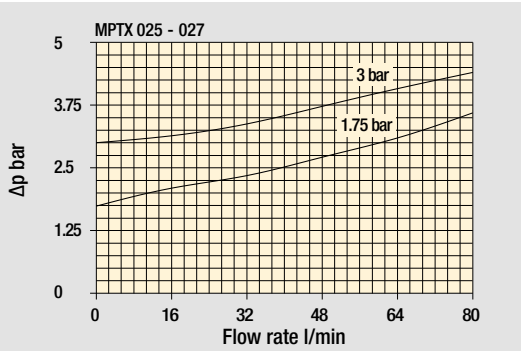

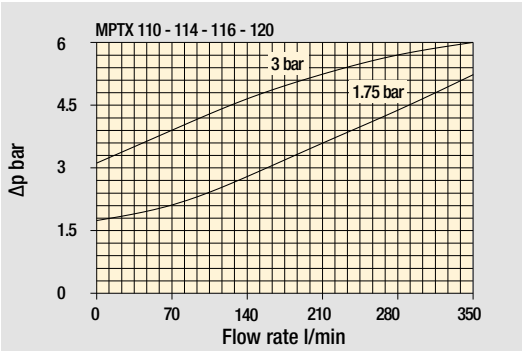

Air breather pressure drop

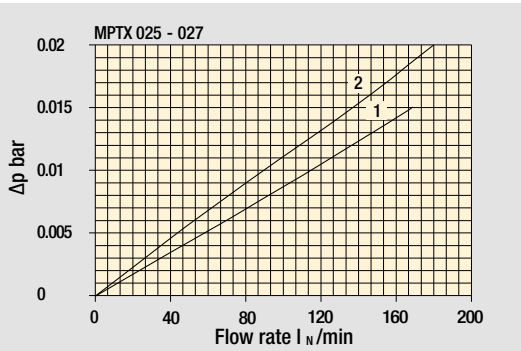

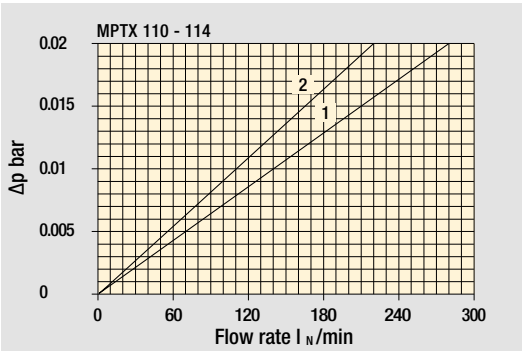

1 C With air breather 10 µm

2 D With anti-splash and SAP50 10 µm

The curves are plotted using mineral oil with density of 0.86 kg/dm³ in compliance with ISO 3968. Δp varies proportionally with density.

Multifunction

MPTX 025 -027		
Air breather port plugged Indicator port	Air breather standard Indicator port	Anti-splash air breather & pressurized Double indicator port

Multiport - Multifunction

MPTX 110	
Standard - Single IN Port	Double IN Port - Double indicator port
Double IN Port **Option:** double drain port	Double IN Port - Indicator port **Option:** drain port

MPTX 120
Triple IN port **Option:** double drain port

MPTX MPTX025 - MPTX027

Designation & Ordering code

COMPLETE FILTER

Configuration example 1:	MPTX025	1	S	A	G3	A10	E	P01
Configuration example 2:	MPTX027	3	C	W	G6	A03	B	P01

Series and size

MPTX025 | **MPTX027** Filter element with private spigot

Length

1 | **2** | **3** |

Air breather

S	Without air breather
C	With air breather 10 µm
D	With anti-splash and air breather SAP050 10 µm
P	With anti-splash and air breather SAP050 10 µm, pressurization 0.5 bar

Seals and treatments

		Filtration rating Axx	Mxx	Pxx
A	NBR	•	•	•
V	FPM	•	•	•
W	NBR head anodized (filter element compatible with fluids HFA-HFB-HFC)	•	•	
Z	FPM head anodized (filter element compatible with fluids HFA-HFB-HFC)	•	•	

Connections

G1	G 3/8”	**G6**	3/4” NPT
G2	G 1/2”	**G7**	SAE 6 - 9/16” - 18 UNF
G3	G 3/4”	**G8**	SAE 8 - 3/4” - 16 UNF
G4	3/8” NPT	**G9**	SAE 12 - 1 1/16” - 12 UN
G5	1/2” NPT		

Filtration rating (filter media)

A03	Inorganic microfiber 3 µm	**M25**	Wire mesh 25 µm
A06	Inorganic microfiber 6 µm	**M60**	Wire mesh 60 µm
A10	Inorganic microfiber 10 µm	**M90**	Wire mesh 90 µm
A16	Inorganic microfiber 16 µm	**P10**	Resin impregnated paper 10 µm
A25	Inorganic microfiber 25 µm	**P25**	Resin impregnated paper 25 µm

Bypass valve

E	3 bar
B	1.75 bar

Execution

P01	MP Filtri standard
Pxx	Customized

FILTER ELEMENT

Configuration example 2:	MFX020	1	A10	H	B	E	P01
Configuration example 1:	MFX020	3	A03	W	B		P01

Element series and size

MFX020 Filter element with private spigot

Element length

1 | **2** | **3** |

Filtration rating (filter media)

A03	Inorganic microfiber 3 µm	**M25**	Wire mesh 25 µm
A06	Inorganic microfiber 6 µm	**M60**	Wire mesh 60 µm
A10	Inorganic microfiber 10 µm	**M90**	Wire mesh 90 µm
A16	Inorganic microfiber 16 µm	**P10**	Resin impregnated paper 10 µm
A25	Inorganic microfiber 25 µm	**P25**	Resin impregnated paper 25 µm

Element Δp

		Filter media Axx	Mxx	Pxx
N	10 bar		•	•
H	10 bar	•		
W	10 bar, compatible with fluids HFA, HFB and HFC	•	•	

Seals

B	NBR
V	FPM

Bypass valve

E	3 bar
	1.75 bar

Execution

P01	MP Filtri standard
Pxx	Customized

ACCESSORIES

Indicators		page
BVA	Axial pressure gauge	240
BVR	Radial pressure gauge	240
BVP	Visual pressure indicator with automatic reset	241
BVQ	Visual pressure indicator with manual reset	241
BEA	Electrical pressure indicator	239
BEM	Electrical pressure indicator	239
BLA	Electrical / visual pressure indicator	239-240

Additional features		page
TE	Extension tube	248
DPT	Dipstick	249

Dimensions

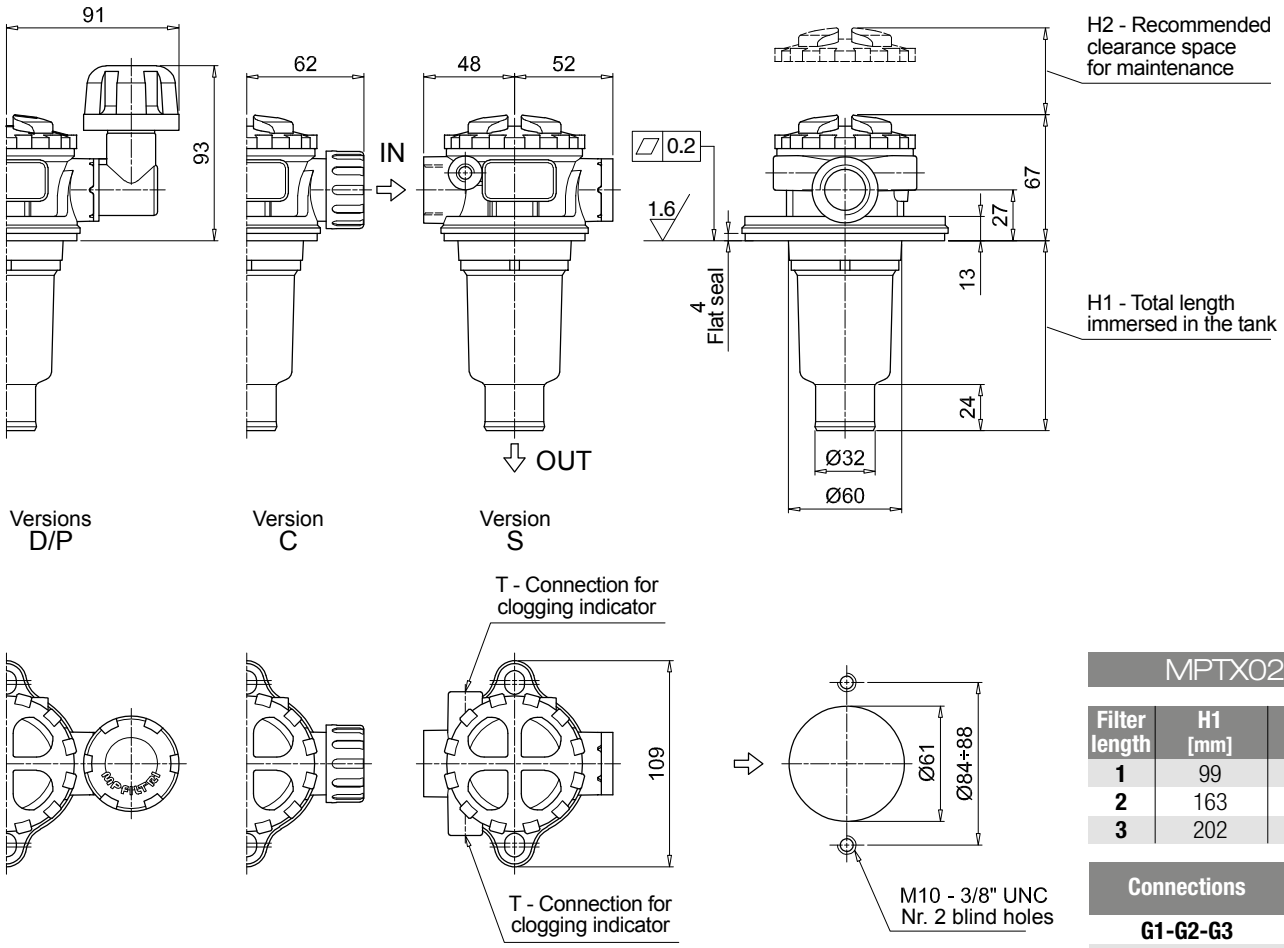

MPTX025

Filter length	H1 [mm]	H2 [mm]
1	99	130
2	163	195
3	202	230

Connections	T
G1-G2-G3	G 1/8”
G4-G5-G6-G7-G8-G9	1/8” NPT

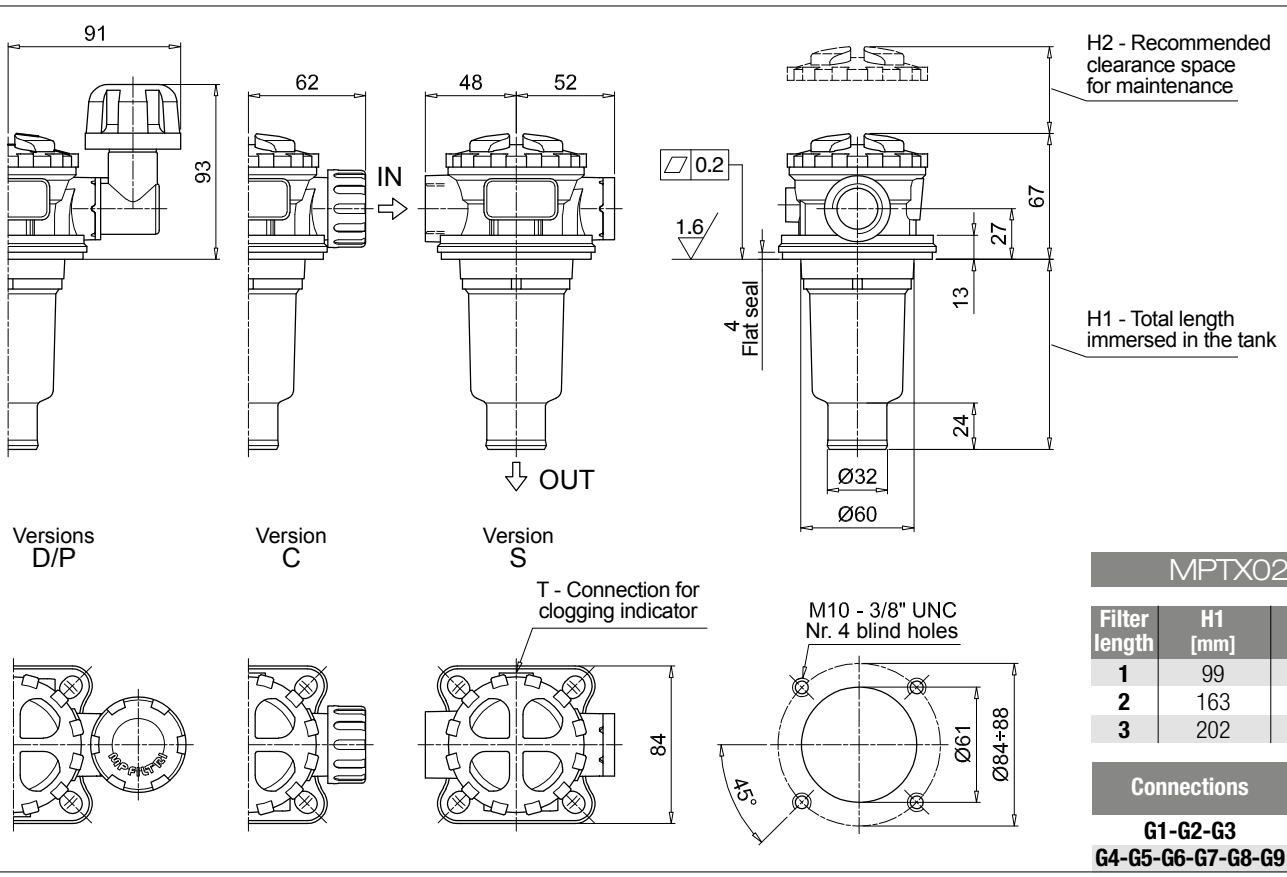

MPTX027

Filter length	H1 [mm]	H2 [mm]
1	99	130
2	163	195
3	202	230

Connections	T
G1-G2-G3	G 1/8”
G4-G5-G6-G7-G8-G9	1/8” NPT

MPTX MPTX110

Designation & Ordering code

COMPLETE FILTER

Configuration example 1:	MPTX110	1	S	A	G1	0	A06	E	P01
Configuration example 2:	MPTX110	3	P	V	G4	1	M25	B	P01

Series and size

MPTX110 Filter element with private spigot

Length

1 | **2** | **3** | **4** |

Air breather

S	Without air breather
C	With air breather 10 µm
D	With anti-splash and air breather SAP050 10 µm
P	With anti-splash and air breather SAP050 10 µm, pressurization 0.5 bar

Seals and treatments

		Filtration rating Axx	Mxx	Pxx
A	NBR	•	•	•
V	FPM	•	•	•
W	NBR head anodized (filter element compatible with fluids HFA-HFB-HFC)	•	•	
Z	FPM head anodized (filter element compatible with fluids HFA-HFB-HFC)	•	•	

Main Connections		Aux size 1	Aux size 2
G1	G 3/4"	G 3/8"	G 1/2"
G2	G 1"		
G3	G 1 1/4"		
G4	3/4" NPT	3/8" NPT	1/2" NPT
G5	1" NPT		

Main Connections		Aux size 1	Aux size 2
G6	1 1/4" NPT	3/8" NPT	1/2" NPT
G7	SAE 12 - 1 1/16" - 12 UN	SAE 6 - 9/16" - 18 UNF	SAE 8 - 3/4" - 16 UNF
G8	SAE 16 - 1 5/16" - 12 UN		
G9	SAE 20 - 1 5/8" - 12 UN		

Aux connection - see previous table

0 Not machined **1** Aux size 1 **2** Aux size 2

Filtration rating (filter media)

A03	Inorganic microfiber 3 µm	**M25**	Wire mesh 25 µm
A06	Inorganic microfiber 6 µm	**M60**	Wire mesh 60 µm
A10	Inorganic microfiber 10 µm	**M90**	Wire mesh 90 µm
A16	Inorganic microfiber 16 µm	**P10**	Resin impregnated paper 10 µm
A25	Inorganic microfiber 25 µm	**P25**	Resin impregnated paper 25 µm

Bypass valve

E	3 bar
B	1.75 bar

Execution

P01	MP Filtri standard
Pxx	Customized

FILTER ELEMENT

Configuration example 1:	MFX100	1	A06	H	B	E	P01
Configuration example 2:	MFX100	3	M25	N	V		P01

Element series and size

MFX100 Filter element with private spigot

Element length

1 | **2** | **3** | **4** |

Filtration rating (filter media)

A03	Inorganic microfiber 3 µm	**M25**	Wire mesh 25 µm
A06	Inorganic microfiber 6 µm	**M60**	Wire mesh 60 µm
A10	Inorganic microfiber 10 µm	**M90**	Wire mesh 90 µm
A16	Inorganic microfiber 16 µm	**P10**	Resin impregnated paper 10 µm
A25	Inorganic microfiber 25 µm	**P25**	Resin impregnated paper 25 µm

Element Δp

		Filter media Axx	Mxx	Pxx
N	10 bar		•	•
H	10 bar	•		
W	10 bar, compatible with fluids HFA, HFB and HFC	•	•	

Seals

B	NBR
V	FPM

Bypass valve

E	3 bar
	1.75 bar

Execution

P01	MP Filtri standard
Pxx	Customized

ACCESSORIES

Indicators		page
BVA	Axial pressure gauge	240
BVR	Radial pressure gauge	240
BVP	Visual pressure indicator with automatic reset	241
BVQ	Visual pressure indicator with manual reset	241
BEA	Electrical pressure indicator	239
BEM	Electrical pressure indicator	239
BLA	Electrical / visual pressure indicator	239-240

Additional features		page
TE	Extension tube	248
DFS	Diffuser with fast lock connection	249
DPT	Dipstick	249

MPTX110		
Filter length	**H1 [mm]**	**H2 [mm]**
1	99	120
2	144	170
3	222	250
4	324	350

Connections	T
G1-G2-G3	G 1/8”
G4-G5-G6-G7-G8-G9	1/8” NPT

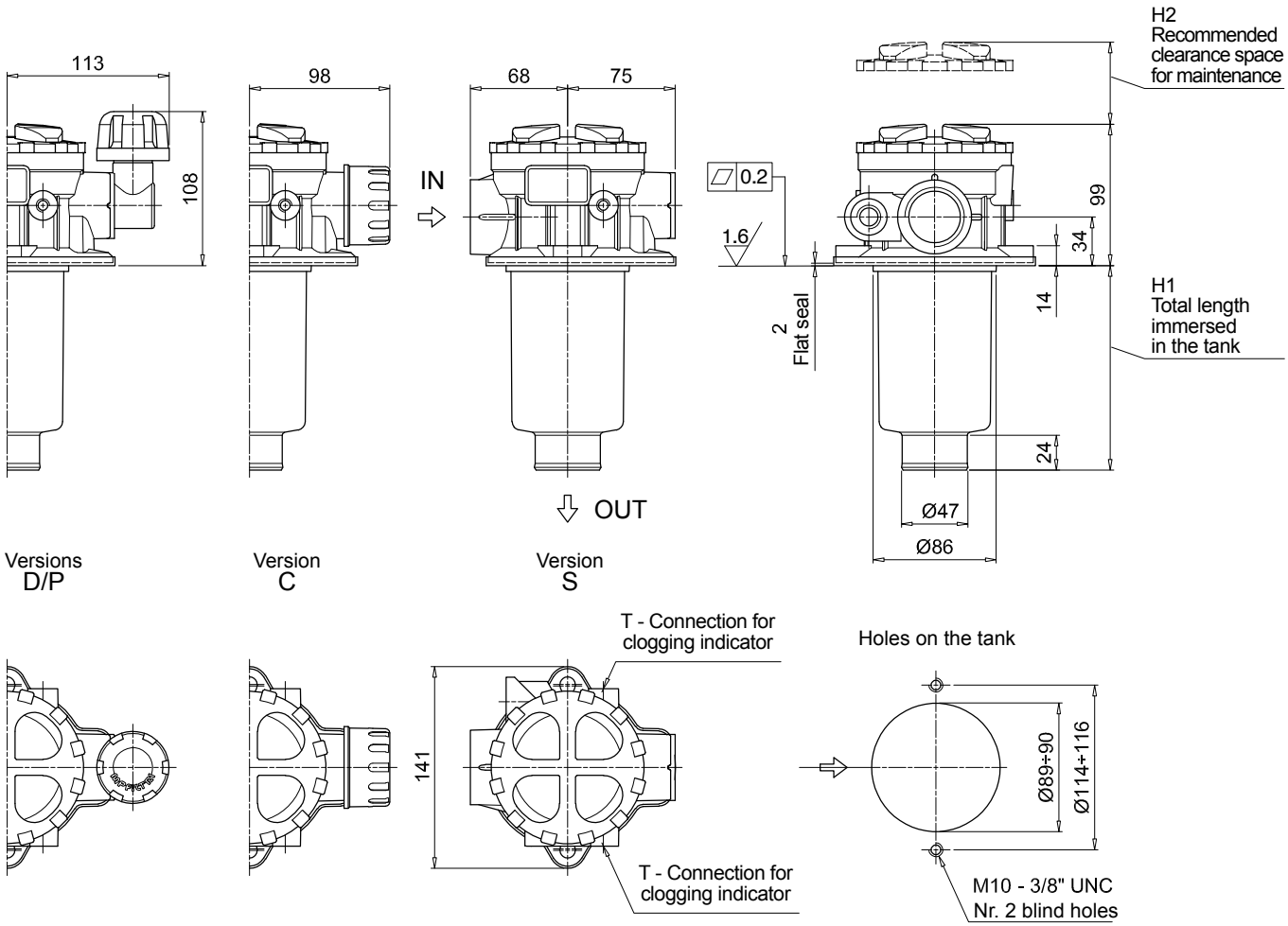

MPTX MPTX114

Designation & Ordering code

COMPLETE FILTER

Configuration example 1:	MPTX114	4	S	A	G3	A10	E	P01
Configuration example 2:	MPTX114	3	C	W	G6	A03	B	P01

Series and size

MPTX114 Filter element with private spigot

Length

1 | **2** | **3** | **4** |

Air breather

- **S** Without air breather
- **C** With air breather 10 µm
- **D** With anti-splash and air breather SAP050 10 µm
- **P** With anti-splash and air breather SAP050 10 µm pressurization 0.5 bar

Seals and treatments

		Filtration rating Axx	Mxx	Pxx
A	NBR	•	•	•
V	FPM	•	•	•
W	NBR head anodized (filter element compatible with fluids HFA-HFB-HFC)	•	•	
Z	FPM head anodized (filter element compatible with fluids HFA-HFB-HFC)	•	•	

Connections

G1	G 3/4”	**G6**	1 1/4” NPT
G2	G 1”	**G7**	SAE 12 - 1 1/16” - 12 UN
G3	G 1 1/4”	**G8**	SAE 16 - 1 5/16” - 12 UN
G4	3/4” NPT	**G9**	SAE 20 - 1 5/8” - 12 UN
G5	1” NPT		

Filtration rating (filter media)

A03	Inorganic microfiber 3 µm	**M25**	Wire mesh 25 µm
A06	Inorganic microfiber 6 µm	**M60**	Wire mesh 60 µm
A10	Inorganic microfiber 10 µm	**M90**	Wire mesh 90 µm
A16	Inorganic microfiber 16 µm	**P10**	Resin impregnated paper 10 µm
A25	Inorganic microfiber 25 µm	**P25**	Resin impregnated paper 25 µm

Bypass valve

- **E** 3 bar
- **B** 1.75 bar

Execution

- **P01** MP Filtri standard
- **Pxx** Customized

FILTER ELEMENT

Configuration example 2:	MFX100	4	A10	H	B	E	P01
Configuration example 1:	MFX100	3	A03	W	B		P01

Element series and size

MFX100 Filter element with private spigot

Element length

1 | **2** | **3** | **4** |

Filtration rating (filter media)

A03	Inorganic microfiber 3 µm	**M25**	Wire mesh 25 µm
A06	Inorganic microfiber 6 µm	**M60**	Wire mesh 60 µm
A10	Inorganic microfiber 10 µm	**M90**	Wire mesh 90 µm
A16	Inorganic microfiber 16 µm	**P10**	Resin impregnated paper 10 µm
A25	Inorganic microfiber 25 µm	**P25**	Resin impregnated paper 25 µm

Element Δp

		Filter media Axx	Mxx	Pxx
N	10 bar		•	•
H	10 bar	•		
W	10 bar, compatible with fluids HFA, HFB and HFC	•	•	

Seals

- **B** NBR
- **V** FPM

Bypass valve

- **E** 3 bar
- 1.75 bar

Execution

- **P01** MP Filtri standard
- **Pxx** Customized

ACCESSORIES

Indicators		page
BVA	Axial pressure gauge	240
BVR	Radial pressure gauge	240
BVP	Visual pressure indicator with automatic reset	241
BVQ	Visual pressure indicator with manual reset	241
BEA	Electrical pressure indicator	239
BEM	Electrical pressure indicator	239
BLA	Electrical / visual pressure indicator	239-240

Additional features		page
TE	Extension tube	248
DFS	Diffuser with fast lock connection	249
DPT	Dipstick	249

MPTX114		
Filter length	**H1 [mm]**	**H2 [mm]**
1	99	120
2	144	170
3	222	250
4	324	350

Connections	T
G1-G2-G3	G 1/8”
G4-G5-G6-G7-G8-G9	1/8” NPT

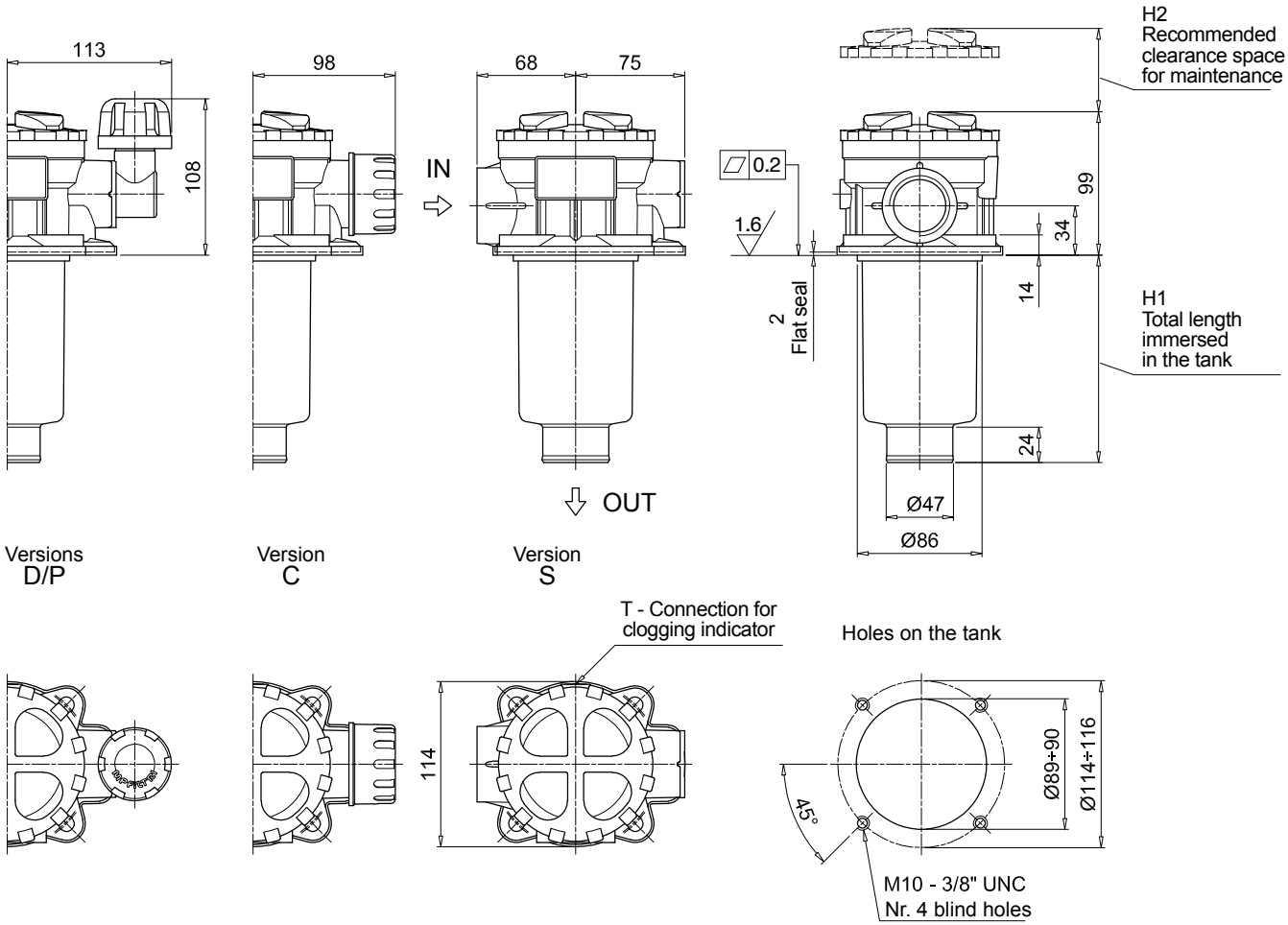

MPTX MPTX116

Designation & Ordering code

COMPLETE FILTER

Configuration example 1:	MPTX116	1	S	A	G1	M90	E	P01
Configuration example 2:	MPTX116	2	S	Z	G9	A03	B	P01

Series and size

MPTX116 Filter element with private spigot

Length

1 | **2** | **3** | **4** |

Air breather

S Without air breather

Seals and treatments

		Filtration rating Axx	Mxx	Pxx
A	NBR	•	•	•
V	FPM	•	•	•
W	NBR head anodized (filter element compatible with fluids HFA-HFB-HFC)	•	•	
Z	FPM head anodized (filter element compatible with fluids HFA-HFB-HFC)	•	•	

Flat seal on the head on request

Connections

G1	G 3/4”	**G6**	1 1/4” NPT
G2	G 1”	**G7**	SAE 12 - 1 1/16” - 12 UN
G3	G 1 1/4”	**G8**	SAE 16 - 1 5/16” - 12 UN
G4	3/4” NPT	**G9**	SAE 20 - 1 5/8” - 12 UN
G5	1” NPT		

Filtration rating (filter media)

A03	Inorganic microfiber 3 µm	**M25**	Wire mesh 25 µm
A06	Inorganic microfiber 6 µm	**M60**	Wire mesh 60 µm
A10	Inorganic microfiber 10 µm	**M90**	Wire mesh 90 µm
A16	Inorganic microfiber 16 µm	**P10**	Resin impregnated paper 10 µm
A25	Inorganic microfiber 25 µm	**P25**	Resin impregnated paper 25 µm

Bypass valve

E 3 bar
B 1.75 bar

Execution

P01 MP Filtri standard
Pxx Customized

FILTER ELEMENT

Configuration example 2:	MFX100	1	M90	N	B	E	P01
Configuration example 1:	MFX100	2	A03	W	V		P01

Element series and size

MFX100 Filter element with private spigot

Element length

1 | **2** | **3** | **4** |

Filtration rating (filter media)

A03	Inorganic microfiber 3 µm	**M25**	Wire mesh 25 µm
A06	Inorganic microfiber 6 µm	**M60**	Wire mesh 60 µm
A10	Inorganic microfiber 10 µm	**M90**	Wire mesh 90 µm
A16	Inorganic microfiber 16 µm	**P10**	Resin impregnated paper 10 µm
A25	Inorganic microfiber 25 µm	**P25**	Resin impregnated paper 25 µm

Element Δp

		Filter media Axx	Mxx	Pxx
N	10 bar		•	•
H	10 bar	•		
W	10 bar, compatible with fluids HFA, HFB and HFC	•	•	

Seals

B NBR
V FPM

Bypass valve

E 3 bar
1.75 bar

Execution

P01 MP Filtri standard
Pxx Customized

ACCESSORIES

Indicators		page
BVA	Axial pressure gauge	240
BVR	Radial pressure gauge	240
BVP	Visual pressure indicator with automatic reset	241
BVQ	Visual pressure indicator with manual reset	241
BEA	Electrical pressure indicator	239
BEM	Electrical pressure indicator	239
BLA	Electrical / visual pressure indicator	239-240

Additional features		page
TE	Extension tube	248
DFS	Diffuser with fast lock connection	249
DPT	Dipstick	249

MPTX116		
Filter length	**H1 [mm]**	**H2 [mm]**
1	99	120
2	146	170
3	224	250
4	326	350

Connections	T
G1-G2-G3	G 1/8”
G4-G5-G6-G7-G8-G9	1/8” NPT

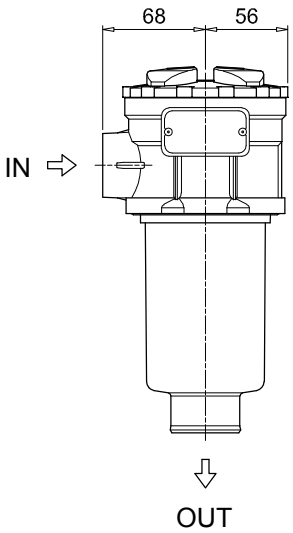

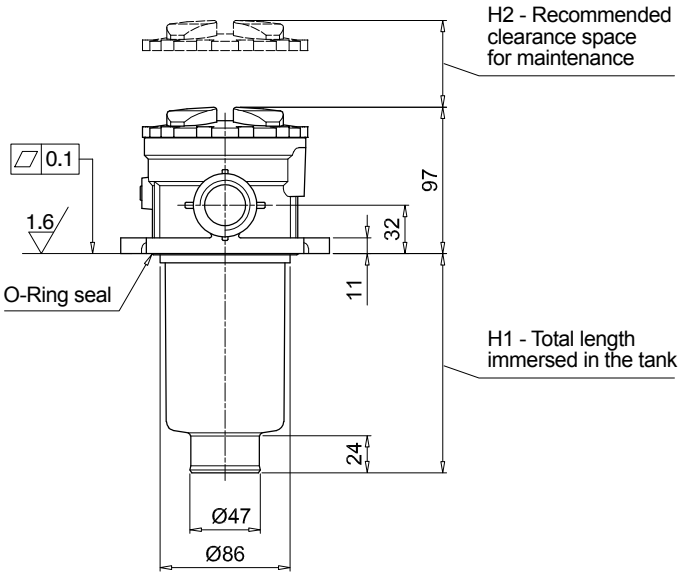

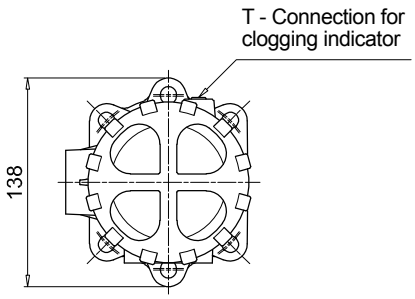

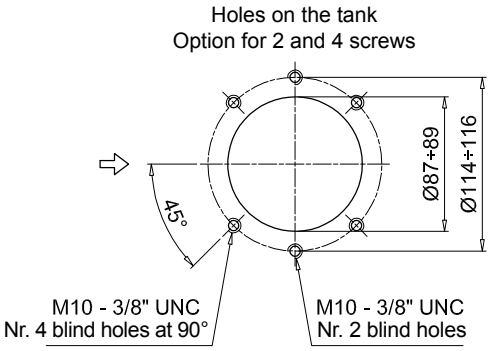

MPTX MPTX120

Designation & Ordering code

COMPLETE FILTER

Configuration example 1:	MPTX120	1	A	G1	0	A06	E	P01
Configuration example 2:	MPTX120	3	V	G4	1	M25	B	P01

Series and size

MPTX120 Filter element with private spigot

Length

1 | **2** | **3** | **4** |

Seals and treatments

		Filtration rating Axx	Mxx	Pxx
A	NBR	•	•	•
V	FPM	•	•	•
W	NBR head anodized (filter element compatible with fluids HFA-HFB-HFC)	•	•	
Z	FPM head anodized (filter element compatible with fluids HFA-HFB-HFC)	•	•	

Main Connections	Rear connections	Aux size 1	Aux size 2
G1 G 3/4"	G 3/4"	G 3/8"	G 1/2"
G2 G 1"	G 1"		
G3 G 1 1/4"	G 3/4"		
G4 3/4" NPT	3/4" NPT	3/8" NPT	1/2" NPT
G5 1" NPT	1" NPT		
G6 1 1/4" NPT	3/4" NPT		
G7 SAE 12 - 1 1/16" - 12 UN	SAE 12 - 1 1/16" - 12 UN	SAE 6 - 9/16" - 18 UNF	SAE 8 - 3/4" - 16 UNF
G8 SAE 16 - 1 5/16" - 12 UN	SAE 16 - 1 5/16" - 12 UN		
G9 SAE 20 - 1 5/8" - 12 UN	SAE 12 - 1 1/16" - 12 UN		

Aux connection - see previous table

0 Not machined **1** Aux size 1 **2** Aux size 2

Filtration rating (filter media)

A03	Inorganic microfiber 3 µm	**M25**	Wire mesh 25 µm
A06	Inorganic microfiber 6 µm	**M60**	Wire mesh 60 µm
A10	Inorganic microfiber 10 µm	**M90**	Wire mesh 90 µm
A16	Inorganic microfiber 16 µm	**P10**	Resin impregnated paper 10 µm
A25	Inorganic microfiber 25 µm	**P25**	Resin impregnated paper 25 µm

Bypass valve

E 3 bar
B 1.75 bar

Execution

P01 MP Filtri standard
Pxx Customized

FILTER ELEMENT

Configuration example 1:	MFX100	1	A06	H	B	E	P01
Configuration example 2:	MFX100	3	M25	N	V		P01

Element series and size

MFX100 Filter element with private spigot

Element length

1 | **2** | **3** | **4** |

Filtration rating (filter media)

A03	Inorganic microfiber 3 µm	**M25**	Wire mesh 25 µm
A06	Inorganic microfiber 6 µm	**M60**	Wire mesh 60 µm
A10	Inorganic microfiber 10 µm	**M90**	Wire mesh 90 µm
A16	Inorganic microfiber 16 µm	**P10**	Resin impregnated paper 10 µm
A25	Inorganic microfiber 25 µm	**P25**	Resin impregnated paper 25 µm

Element Δp

		Filter media Axx	Mxx	Pxx
N	10 bar		•	•
H	10 bar	•		
W	10 bar, compatible with fluids HFA, HFB and HFC	•	•	

Seals

B NBR
V FPM

Bypass valve

E 3 bar
1.75 bar

Execution

P01 MP Filtri standard
Pxx Customized

ACCESSORIES

Indicators		page
BVA	Axial pressure gauge	240
BVR	Radial pressure gauge	240
BVP	Visual pressure indicator with automatic reset	241
BVQ	Visual pressure indicator with manual reset	241
BEA	Electrical pressure indicator	239
BEM	Electrical pressure indicator	239
BLA	Electrical / visual pressure indicator	239-240

Additional features		page
TE	Extension tube	248
DFS	Diffuser with fast lock connection	249
DPT	Dipstick	249

MPTX120		
Filter length	**H1 [mm]**	**H2 [mm]**
1	99	120
2	144	170
3	222	250
4	324	350

Connections	T
G1-G2-G3	G 1/8”
G4-G5-G6-G7-G8-G9	1/8” NPT

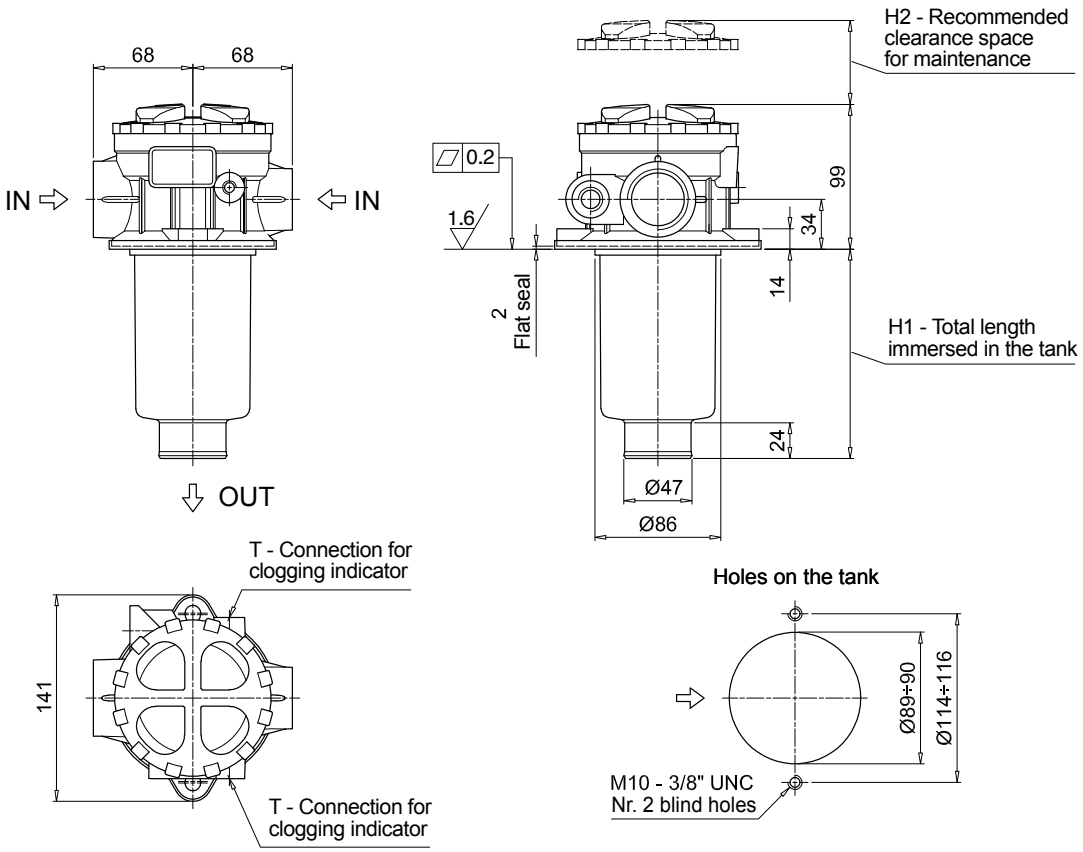

MPTX SPARE PARTS

Order number for spare parts

MPTX 025 - 027 - 110

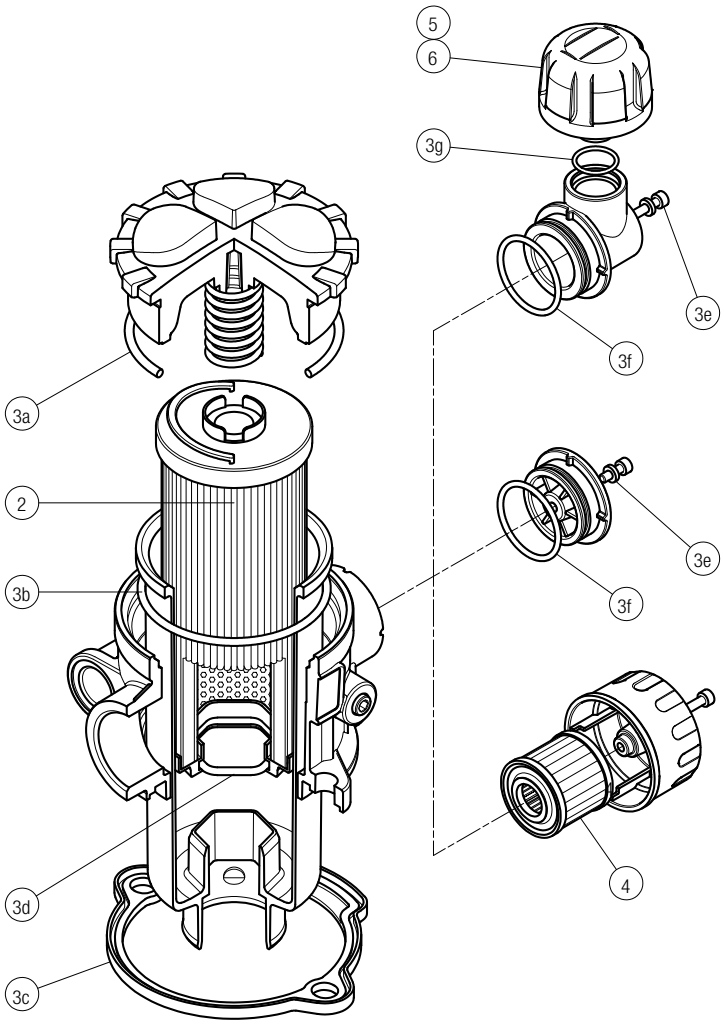

Item:	Q.ty: 1 pc. 2	Q.ty: 1 pc. 3 (3a ÷ 3g)		Q.ty: 1 pc. 4	Q.ty: 1 pc. 5	Q.ty: 1 pc. 6
Filter series	**Filter element**	**Seal Kit code number**		**Air breather filter element - version:**		
		NBR	**FPM**	**C**	**D**	**P**
MPTX 025	See order table	02050701	02050702	10 µm A3L03	10 µm SAP50G3L03A0P01	10 µm SAP50G3L03A1P01
MPTX 027		02050703	02050704	10 µm A3L03	10 µm SAP50G3L03A0P01	10 µm SAP50G3L03A1P01
MPTX 110		02050709	02050710	10 µm A5L03	10 µm SAP50G3L03A0P01	10 µm SAP50G3L03A1P01

MPTX 116

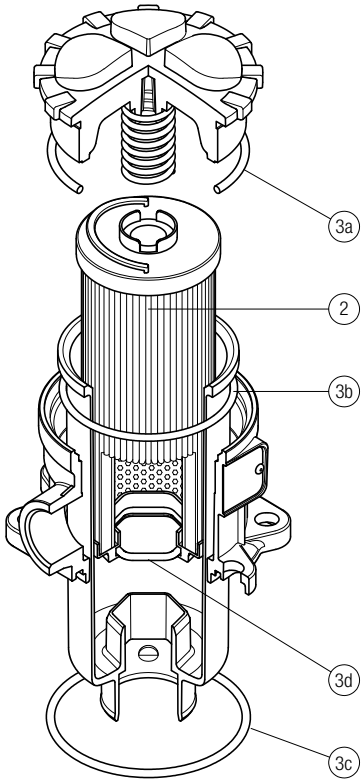

Item:	Q.ty: 1 pc. 2	Q.ty: 1 pc. 3 (3a ÷ 3d)	
Filter series	**Filter element**	**Seal Kit code number**	
		NBR	**FPM**
MPTX 116	See order table	02050737	02050738

Order number for spare parts

MPTX 114

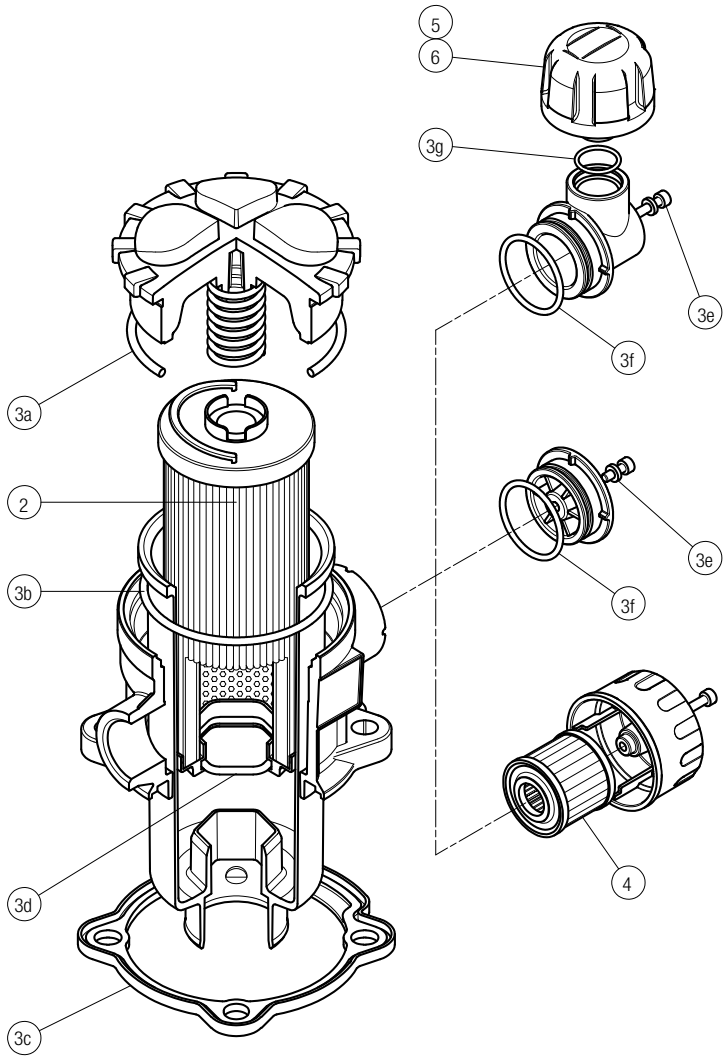

Item:	Q.ty: 1 pc. 2	Q.ty: 1 pc. 3 (3a ÷ 3g)		Q.ty: 1 pc. 4	Q.ty: 1 pc. 5	Q.ty: 1 pc. 6
Filter series	Filter element	Seal Kit code number NBR	FPM	Air breather filter element - version: C	D	P
MPTX 114	See order table	02050707	02050708	10 µm A5L03	10 µm SAP50G3L03A0P01	10 µmm SAP50G3L03A1P01

MPTX 120

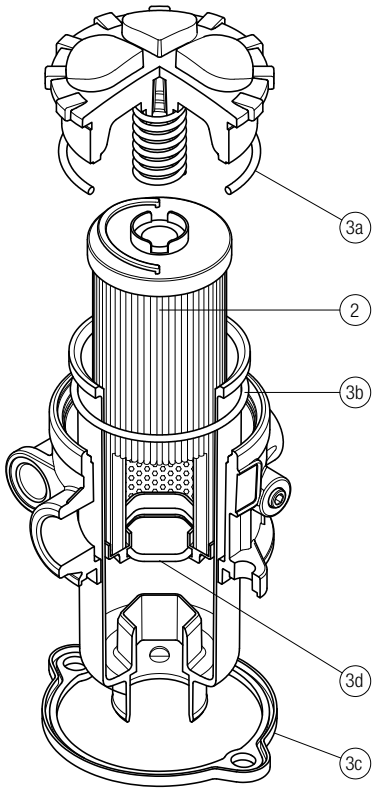

Item:	Q.ty: 1 pc. 2	Q.ty: 1 pc. 3 (3a ÷ 3d)	
Filter series	Filter element	Seal Kit code number NBR	FPM
MPTX 120	See order table	02050711	02050712

MFBX series
BOWL ASSEMBLY

Maximum working pressure up to 800 kPa (8 bar) - Flow rate up to 700 l/min

MFBX GENERAL INFORMATION

Description

Return filter | Bowl assembly

Maximum working pressure up to 800 kPa (8 bar)
Flow rate up to 700 l/min

MFBX is a range of return filter kits for protection of the reservoir against the system contamination.
They are directly integrated in the moulded reservoir in immersed or semi-immersed position to save space into the tank.
Treaded or flanged covers can be provided.
The filter output must be always immersed into the fluid to avoid aeration or foam generation into the reservoir.

Available features:
- Fine filtration rating, to get a good cleanliness level into the reservoir
- Bypass valve integrated into the filter element, to relieve excessive pressure drop across the filter media
- Extension tube, to be used in deep reservoirs (sold as separate item)
- Diffuser, to reduce the risk of aeration, foaming and noise (sold as separate item)
- MyClean interface connection, to protect the product against non-original spare parts
- External protective wrap, to optimize the flow through the element and to save the element efficiency against non-proper handling

Common applications:
Mobile machines

Technical data

Bowl assembly materials
- Cover
  Nylon: MFBX 020-030-100
  Aluminium: MFBX 180-190

- Bowl: Nylon

Filter element materials
- Caps: Nylon
- Spring: Spring steel

Bypass valve
- Opening pressure 175 kPa (1.75 bar) ±10%
- Opening pressure 300 kPa (3 bar) ±10%

Δp element type
- Microfibre filter elements - series H: 10 bar
- Fluid flow through the filter element from OUT to IN

Seals
- Standard NBR series A
- Optional FPM series V

Temperature
From -25 °C to +110 °C

Note
MFBX filters are provided for vertical mounting

Weights [kg] and volumes [dm³]

Filter series	Weights [kg]					Volumes [dm³]				
	Length	1	2	3	4	Length	1	2	3	4
MFBX 020		0.25	0.35	0.40	-		0.10	0.15	0.20	-
MFBX 030		0.25	-	-	-		0.15	-	-	-
MFBX 100		0.50	0.60	0.75	0.95		0.35	0.50	0.80	1.10
MFBX 180		1.60	2.40	-	-		1.50	2.90	-	-
MFBX 190		-	2.40	-	-		-	3.00	-	-

FILTER ASSEMBLY SIZING
Flow rates [l/min]

		Filter element design - H series					Filter element design - N series		
Filter series	Length	A03	A06	A10	A16	A25	M25 M60 M90	P10	P25
MFBX 020	**1**	7	10	23	28	42	59	51	54
	2	17	20	45	48	56	72	64	67
	3	21	24	50	55	59	76	74	75
MFBX 030	**1**	7	10	24	29	47	84	60	66
MFBX 100	**1**	18	20	53	56	65	153	87	96
	2	28	38	65	75	95	158	111	123
	3	48	55	125	135	169	289	224	251
	4	79	89	180	185	198	306	264	289
MFBX 180	**1**	127	148	235	243	278	441	285	299
	2	231	262	358	382	388	472	404	412
MFBX 190	**2**	261	305	489	528	546	696	583	598

Maximum flow rate for a complete return filter with a pressure drop Δp = 0.5 bar.
The reference fluid has a kinematic viscosity of 30 mm^2/s (cSt) and a density of 0.86 kg/dm^3.
For different pressure drop or fluid viscosity we recommend to use our selection software available on www.mpfiltri.com.
You can also calculate the right size using the formulas present on the FILTER SIZING paragraph at the beginning of the full catalogue or at the beginning of the filter family brochure.
Please, contact our Sales Department for further additional information.

Hydraulic symbols

Filter series	Style 1 connection
MFBX 020	•
MFBX 030	•
MFBX 100	•
MFBX 180	•
MFBX 190	•

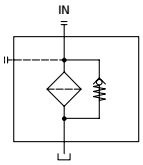

Designation & Ordering code

COMPLETE FILTER

Configuration example 1:	MFBX100	1	A	2	A10	H	E	P01
Configuration example 2:	MFBX180	2	V	1	M25	N	B	P01

Series and size

MFBX020 | MFBX030 | MFBX100 | MFBX180 | MFBX190

Filter element with private spigot

Length	MFBX020	MFBX030	MFBX100	MFBX180	MFBX190
1	•	•	•	•	
2	•		•	•	•
3	•		•		
4			•		

Seals

A NBR
V FPM

Version	MFBX020	MFBX030	MFBX100	MFBX180	MFBX190
1 Without cover	•	•	•	•	•
2 With flanged cover type MPF		•	•	•	•
3 With threaded cover type MPT	•		•		

Filtration rating (filter media)

A03	Inorganic microfiber 3 µm	**M25**	Wire mesh 25 µm
A06	Inorganic microfiber 6 µm	**M60**	Wire mesh 60 µm
A10	Inorganic microfiber 10 µm	**M90**	Wire mesh 90 µm
A16	Inorganic microfiber 16 µm	**P10**	Resin impregnated paper 10 µm
A25	Inorganic microfiber 25 µm	**P25**	Resin impregnated paper 25 µm

Element Δp	Filter media Axx	Mxx	Pxx
N 10 bar		•	•
H 10 bar	•		
W 10 bar, compatible with fluids HFA, HFB and HFC	•	•	

Bypass valve

E 3 bar
B 1.75 bar

Execution

P01 MP Filtri standard
Pxx Customized

FILTER ELEMENT

Configuration example 1:	MFX180	2	M25	H	V		P01
Configuration example 2:	MFX100	1	A10	N	B	E	P01

Element series and size

MFX020 | MFX030 | MFX100 | MFX180

Filter element with private spigot

Element length	MFX020	MFX030	MFX100	MFX180	MFX190
1	•	•	•	•	
2	•		•	•	•
3	•		•		
4			•		

Filtration rating (filter media)

A03	Inorganic microfiber 3 µm	**M25**	Wire mesh 25 µm
A06	Inorganic microfiber 6 µm	**M60**	Wire mesh 60 µm
A10	Inorganic microfiber 10 µm	**M90**	Wire mesh 90 µm
A16	Inorganic microfiber 16 µm	**P10**	Resin impregnated paper 10 µm
A25	Inorganic microfiber 25 µm	**P25**	Resin impregnated paper 25 µm

Element Δp	Filter media Axx	Mxx	Pxx
N 10 bar		•	•
H 10 bar	•		

Seals

B NBR
V FPM

Bypass valve

E 3 bar
1.75 bar

Execution

P01 MP Filtri standard
Pxx Customized

ACCESSORIES

Additional features	MFBX020	MFBX030	MFBX100	MFBX180	MFBX190	page
TE Extension tube	•	•	•	•	•	248
DFS Diffuser with fast lock connection			•			249

MFBX

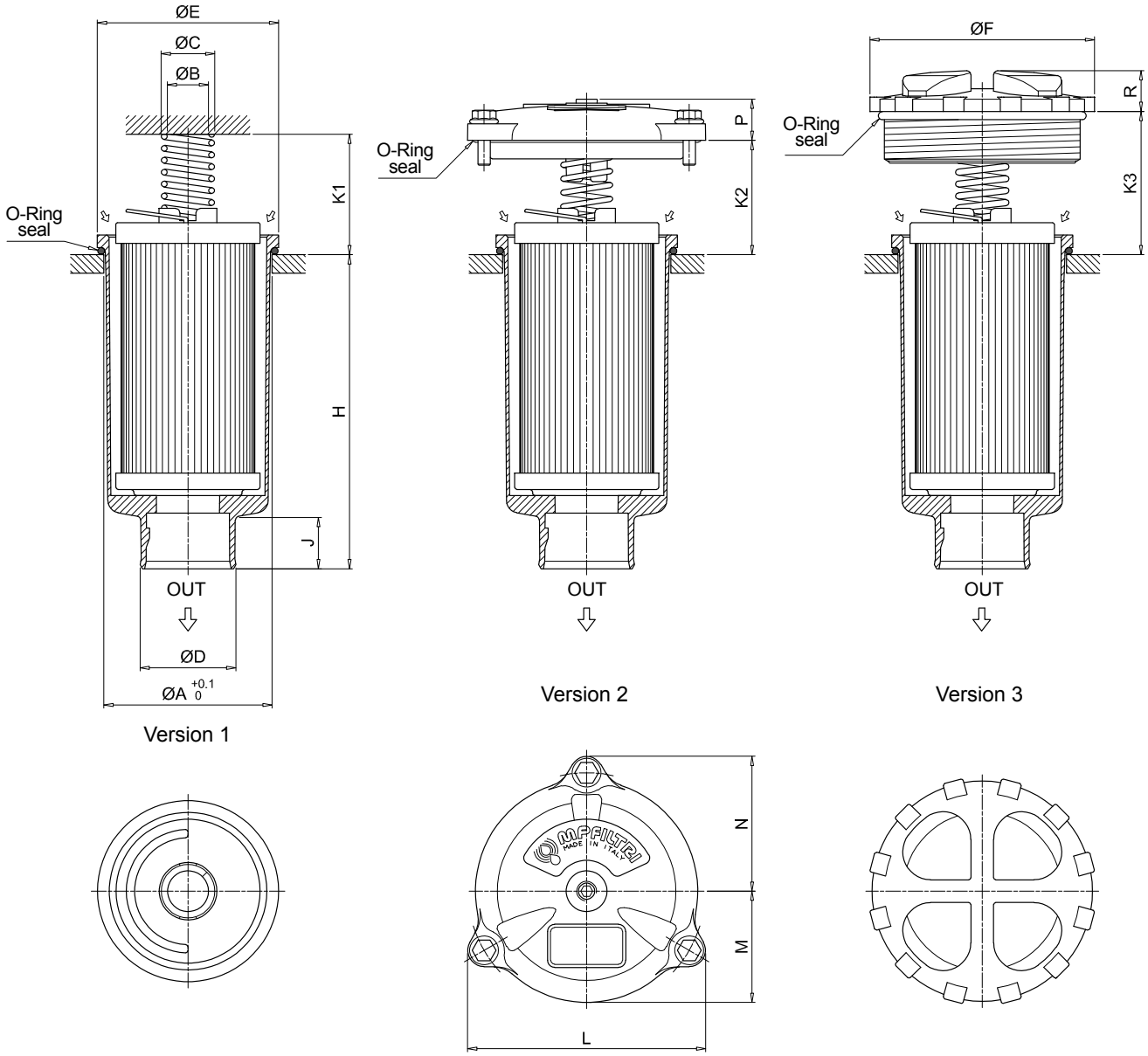

Filter size	Filter Length	ø A [mm]	ø B [mm]	ø C [mm]	ø D [mm]	ø E [mm]	ø F [mm]	H [mm]	J [mm]	K1 [mm]	K2 [mm]	K3 [mm]	L [mm]	M [mm]	N [mm]	P [mm]	R [mm]
020	1	52	20.5	26	32	56	75	111	24	42	-	36	-	-	-	-	18
	2	52	20.5	26	32	56	75	175	24	42	-	36	-	-	-	-	18
	3	52	20.5	26	32	56	75	214	24	42	-	36	-	-	-	-	18
030	1	60.5	20	25.5	32	68	-	93	21	33	35	-	92	42	52	18	-
100	1	80.5	20	26	47	88	111	109	24	58	55	69	116	54	66	20	20
	2	80.5	20	26	47	88	111	154	24	58	55	69	116	54	66	20	20
	3	80.5	20	26	47	88	111	232	24	58	55	69	116	54	66	20	20
	4	80.5	20	26	47	88	111	334	24	58	55	69	116	54	66	20	20
180	1	112.5	26	33.5	47	121	-	234	31	58	69	-	159	76	95	21	-
	2	112.5	26	33.5	47	121	-	447	31	58	69	-	159	76	95	21	-
190	2	112.5	26	33.5	50	121	-	454	38	58	69	-	159	76	95	21	-

Order number for spare parts

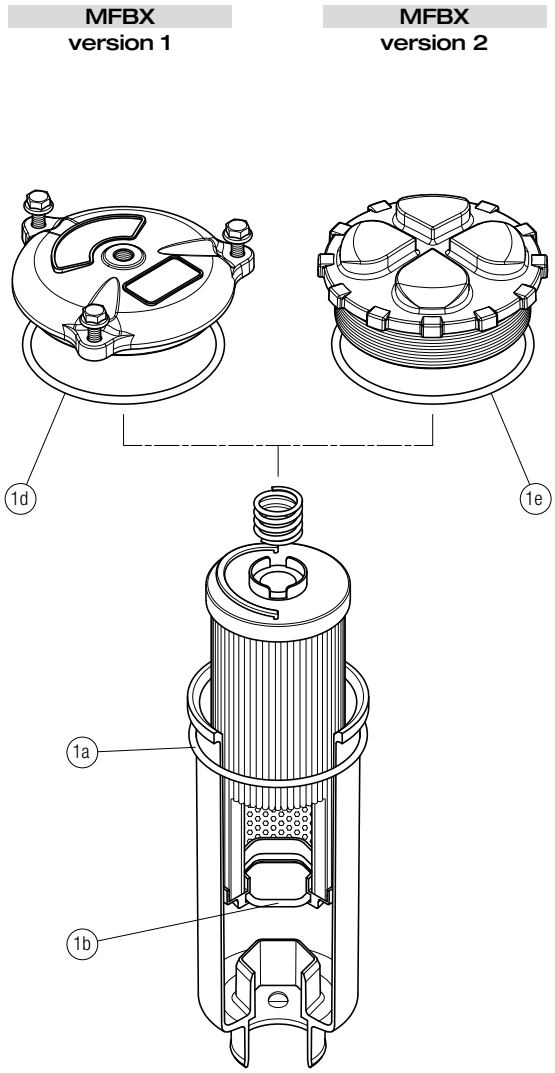

Item:	Q.ty: 1 pc. 1 (1a ÷ 1d)	
Filter series	Seal Kit code number NBR	FPM
MFBX 020	02050713	02050714
MFBX 030	02050715	02050716
MFBX 100	02050717	02050718
MFBX 180-190	02050719	02050720

MPF series

Maximum working pressure up to 800 kPa (8 bar) - Flow rate up to 900 l/min

MPF GENERAL INFORMATION

Description

Return filter

Maximum working pressure up to 800 kPa (8 bar)
Flow rate up to 900 l/min

MPF is a range of return filters for protection of the reservoir against the system contamination.
They are directly fixed to the reservoir, in immersed or semi-immersed position.
The filter output must be always immersed into the fluid to avoid aeration or foam generation into the reservoir.

Available features:

- Female threaded connections up to 2" and flanged connections up to 2", for a maximum flow rate of 750 l/min
- Multiple connections, to connect several return lines or drains
- Fine filtration rating, to get a good cleanliness level into the reservoir
- Bypass valve integrated into the filter element, to relieve excessive pressure drop across the filter media
- 2, 3 or 4 fixing holes for installation, to suit a variety of reservoir surfaces
- O-ring or Flat Seal to suit a variety of reservoir surfaces
- Oil dipstick, to easily check the level of the fluid into the reservoir (sold as separate item)
- Extension tube, to be used in deep reservoirs (sold as separate item)
- Diffuser, to reduce the risk of aeration, foaming and noise (sold as separate item)
- Filler plug, to fill cleaned fluid into the tank without an additional connection
- Visual, electrical and electronic clogging indicators

Common applications:

- Light industrial equipment
- Mobile application

Technical data

Filter housing materials

- Head: Aluminium

- Cover
  Nylon: MPF 020-030-100-104-110
  Aluminium: MPF 181-182-184-191-192-194-400-410-450-451-750

- Bowl: Nylon

Bypass valve

- Opening pressure 175 kPa (1.75 bar) ±10%
- Opening pressure 300 kPa (3 bar) ±10%

Δp element type

- Microfibre filter elements - series H: 10 bar
- Fluid flow through the filter element from OUT to IN

Seals

- Standard NBR series A
- Optional FPM series V

Temperature

From -25 °C to +110 °C

Note

MPF filters are provided for vertical mounting

Weights [kg] and volumes [dm³]

Filter series	Weights [kg]					Volumes [dm³]				
	Length	1	2	3	4	Length	1	2	3	4
MPF 020		0.30	-	-	-		0.26	-	-	-
MPF 030		0.40	-	-	-		0.29	-	-	-
MPF 100		0.61	0.64	0.67	0.74		0.64	0.85	1.20	1.65
MPF 104		0.82	0.96	1.02	1.25		0.64	0.85	1.20	1.65
MPF 110		0.64	0.68	0.71	0.78		-	-	-	-
MPF 181		2.20	3.00	-	-		2.50	4.00	-	-
MPF 182		2.30	3.10	-	-		2.50	4.00	-	-
MPF 184		2.55	3.45	-	-		2.65	4.45	-	-
MPF 191		-	3.00	-	-		-	4.25	-	-
MPF 192		-	3.10	-	-		-	4.25	-	-
MPF 194		-	3.45	-	-		-	4.45	-	-
MPF 400		3.35	3.65	3.90	-		3.70	4.60	5.40	-
MPF 410		3.55	3.85	4.10	-		3.70	4.60	5.40	-
MPF 450-451		3.95	4.25	4.50	-		3.70	4.60	5.40	-
MPF 750		6.30	-	-	-		8.45	-	-	-

FILTER ASSEMBLY SIZING
Flow rates [l/min]

		Filter element design - H series					Filter element design - N series		
Filter series	Length	A03	A06	A10	A16	A25	M25 M60 M90	P10	P25
MPF 020	**1**	7	10	23	28	42	59	51	54
MPF 030	**1**	7	10	24	29	47	84	60	66
MPF 100-104-110	**1**	18	20	53	56	65	153	87	96
	2	28	38	65	75	95	158	111	123
	3	48	55	125	135	169	289	224	251
	4	79	89	180	185	198	306	264	289
MPF 181-182-184	**1**	127	148	235	243	278	441	285	299
	2	231	262	358	382	388	472	404	412
MPF 191-192-194	**2**	261	305	489	528	546	696	583	598
MPF 400	**1**	150	171	294	304	350	585	370	390
	2	237	252	454	462	589	868	619	645
	3	248	288	553	609	621	885	680	703
MPF 410	**1**	146	167	277	285	325	512	341	357
	2	226	239	396	402	485	644	503	519
	3	236	269	462	497	505	653	539	553
MPF 450-451	**1**	150	171	294	304	350	585	370	390
	2	237	252	454	462	589	868	619	645
	3	248	288	553	609	621	885	680	703
MPF 750	**1**	392	465	623	700	769	929	804	819

Maximum flow rate for a complete return filter with a pressure drop Δp = 0.5 bar.
The reference fluid has a kinematic viscosity of 30 mm^2/s (cSt) and a density of 0.86 kg/dm^3.
For different pressure drop or fluid viscosity we recommend to use our selection software available on www.mpfiltri.com.
You can also calculate the right size using the formulas present on the FILTER SIZING paragraph at the beginning of the full catalogue or at the beginning of the filter family brochure.
Please, contact our Sales Department for further additional information.

Hydraulic symbols

Filter series	Style 1 connection	Style 2 connections
MPF 020	•	
MPF 030	•	
MPF 100	•	
MPF 104	•	
MPF 110		•
MPF 181	•	
MPF 182		•
MPF 184	•	•
MPF 191	•	
MPF 192	•	
MPF 194	•	•
MPF 400	•	
MPF 410		•
MPF 450	•	
MPF 451		•
MPF 750	•	

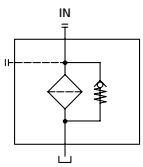

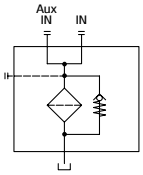

Pressure drop

Filter housings Δp pressure drop

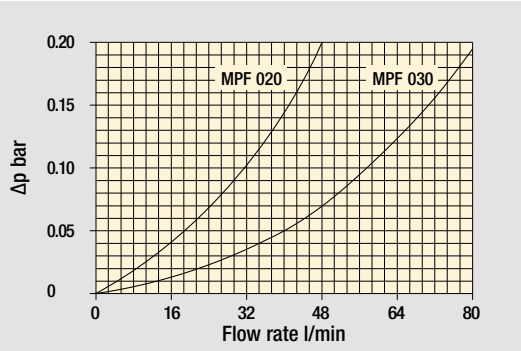

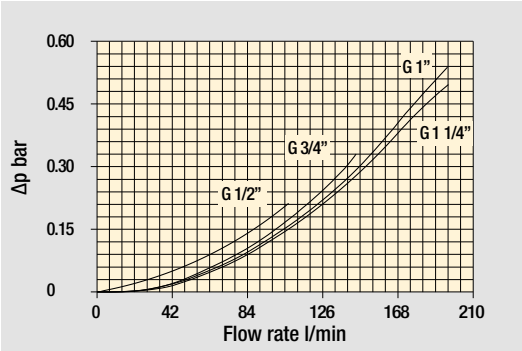

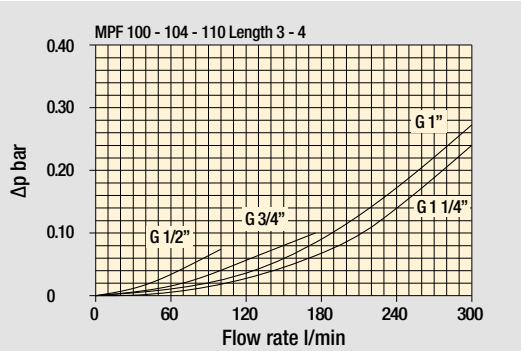

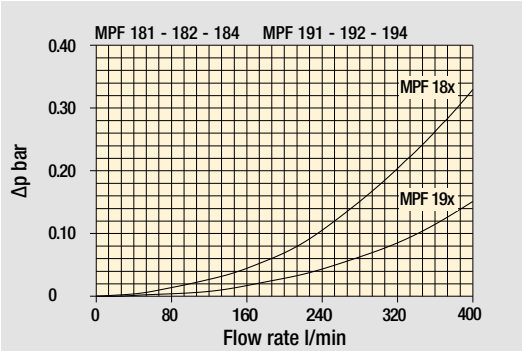

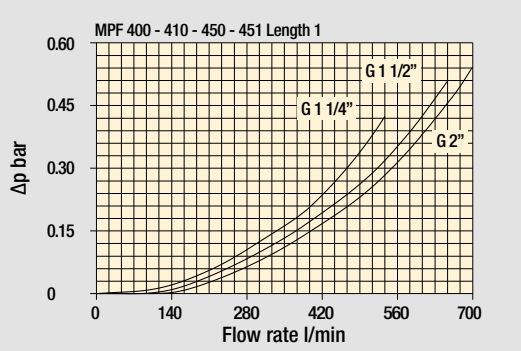

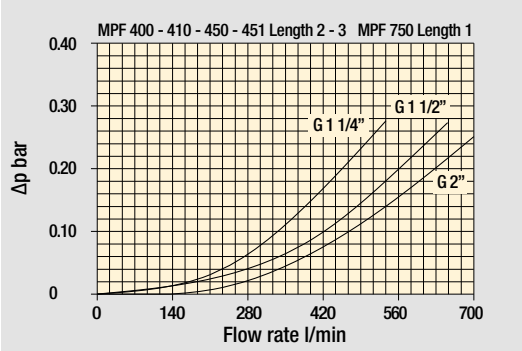

Bypass valve pressure drop

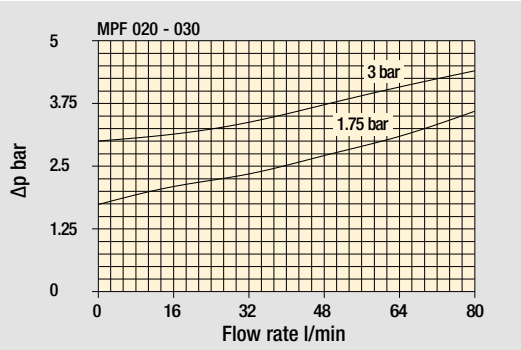

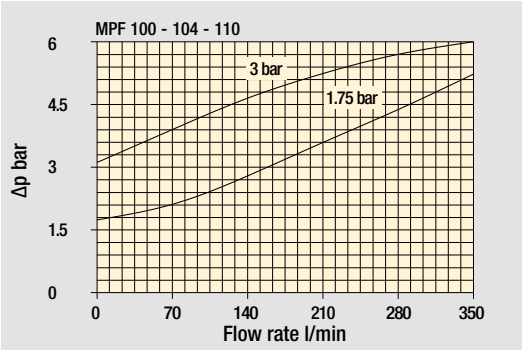

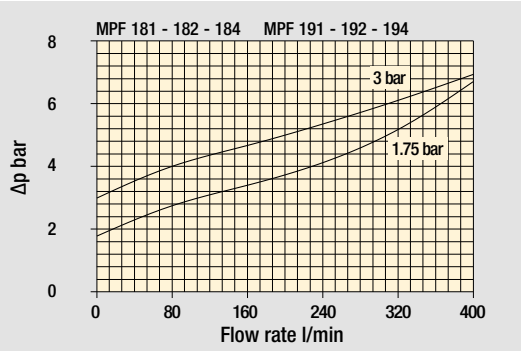

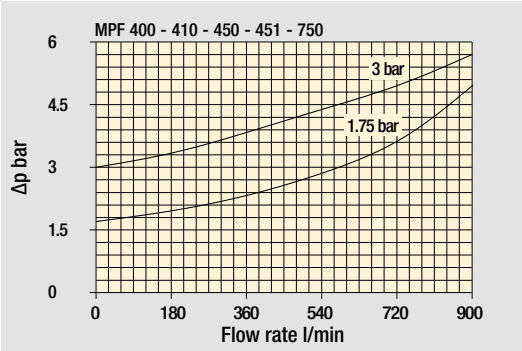

The curves are plotted using mineral oil with density of 0.86 kg/dm³ in compliance with ISO 3968. Δp varies proportionally with density.

Standard - Single IN port

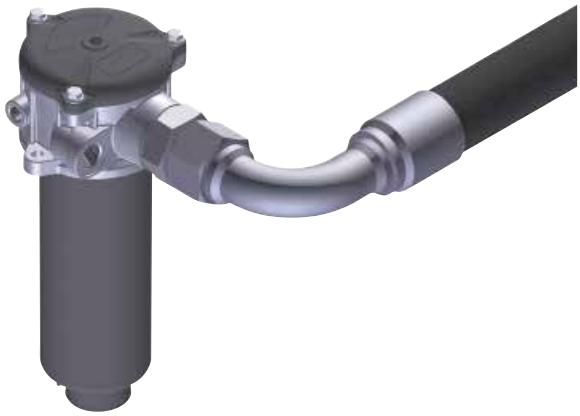

Double IN port
Option: double indicator port

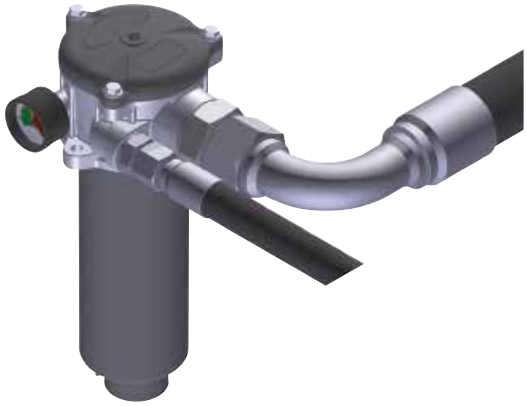

Double IN port - Drain port
Option: indicator port

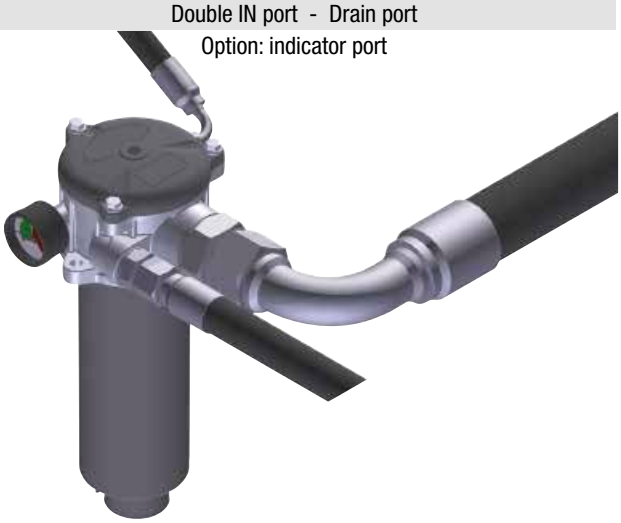

Double IN port - Double drain port

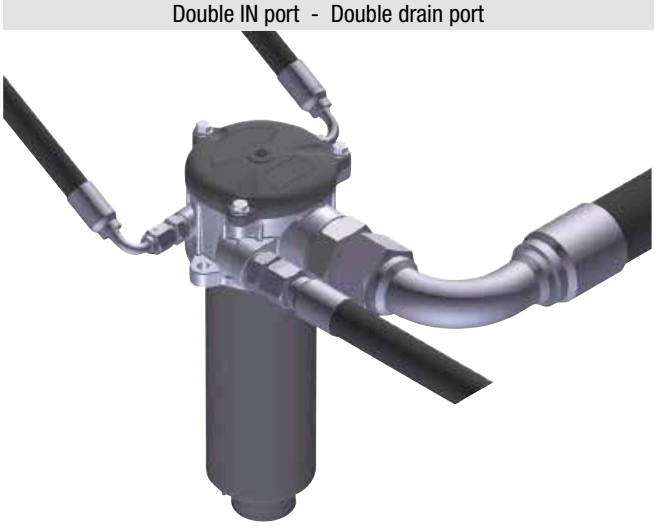

MPF MPF020 - MPF030

Designation & Ordering code

COMPLETE FILTER

Configuration example 1:	MPF020	1	A	P1	A10	H	E	P01
Configuration example 2:	MPF030	1	V	G1	M25	N	B	P01

Series and size

MPF020 | **MPF030** Filter element with standard spigot

Length

1

Seals and treatments

A	NBR
V	FPM
W	NBR head anodized
Z	FPM head anodized

Connections	Size 20	Size 30
P1 Hose barb ø12	•	
G1 G 1/2”		•
G4 1/2” NPT		•
G7 SAE 8 - 3/4” - 16 UNF		•

Filtration rating (filter media)

A03	Inorganic microfiber 3 µm	**M25**	Wire mesh 25 µm
A06	Inorganic microfiber 6 µm	**M60**	Wire mesh 60 µm
A10	Inorganic microfiber 10 µm	**M90**	Wire mesh 90 µm
A16	Inorganic microfiber 16 µm	**P10**	Resin impregnated paper 10 µm
A25	Inorganic microfiber 25 µm	**P25**	Resin impregnated paper 25 µm

Element Δp	Filter media Axx	Mxx	Pxx
N 10 bar		•	•
H 10 bar	•		
W 10 bar, compatible with fluids HFA, HFB and HFC	•	•	

Bypass valve

E	3 bar
B	1.75 bar

Execution

P01	MP Filtri standard
Pxx	Customized

FILTER ELEMENT

Configuration example 1:	MF030	1	A10	H	B	E	P01
Configuration example 2:	MF030	1	M25	N	V		P01

Element series and size

MF030 Filter element with standard spigot

Element length

1

Filtration rating (filter media)

A03	Inorganic microfiber 3 µm	**M25**	Wire mesh 25 µm
A06	Inorganic microfiber 6 µm	**M60**	Wire mesh 60 µm
A10	Inorganic microfiber 10 µm	**M90**	Wire mesh 90 µm
A16	Inorganic microfiber 16 µm	**P10**	Resin impregnated paper 10 µm
A25	Inorganic microfiber 25 µm	**P25**	Resin impregnated paper 25 µm

Element Δp	Filter media Axx	Mxx	Pxx
N 10 bar		•	•
H 10 bar	•		
W 10 bar, compatible with fluids HFA, HFB and HFC	•	•	

Seals

B	NBR
V	FPM

Bypass valve

E	3 bar
	1.75 bar

Execution

P01	MP Filtri standard
Pxx	Customized

ACCESSORIES

Indicators	page
BVA Axial pressure gauge	240
BVR Radial pressure gauge	240
BVP Visual pressure indicator with automatic reset	241
BVQ Visual pressure indicator with manual reset	241

	page
BEA Electrical pressure indicator	239
BEM Electrical pressure indicator	239
BLA Electrical / visual pressure indicator	239-240

Additional features	page
TE Extension tube	248
T5 Filler plug M30x1.5	249

MPF020

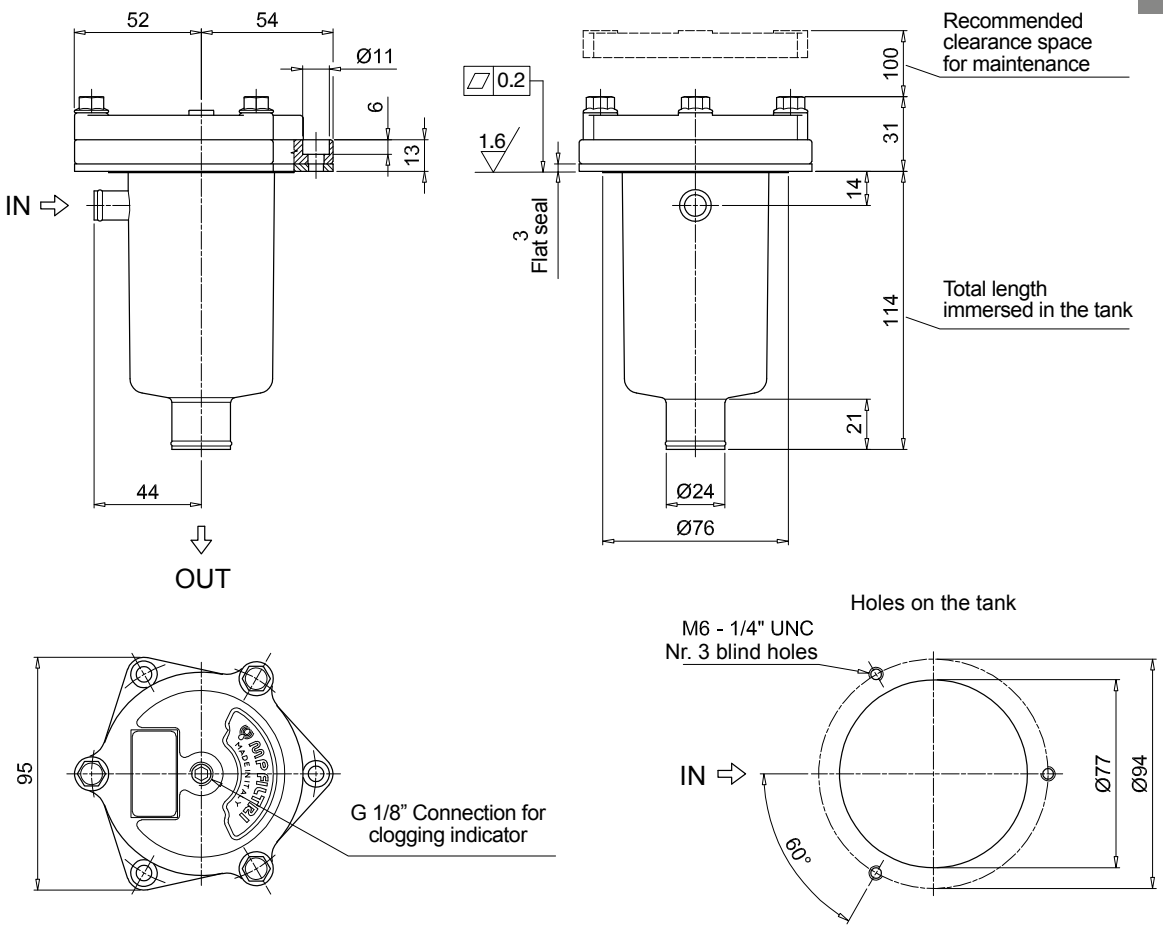

MPF030

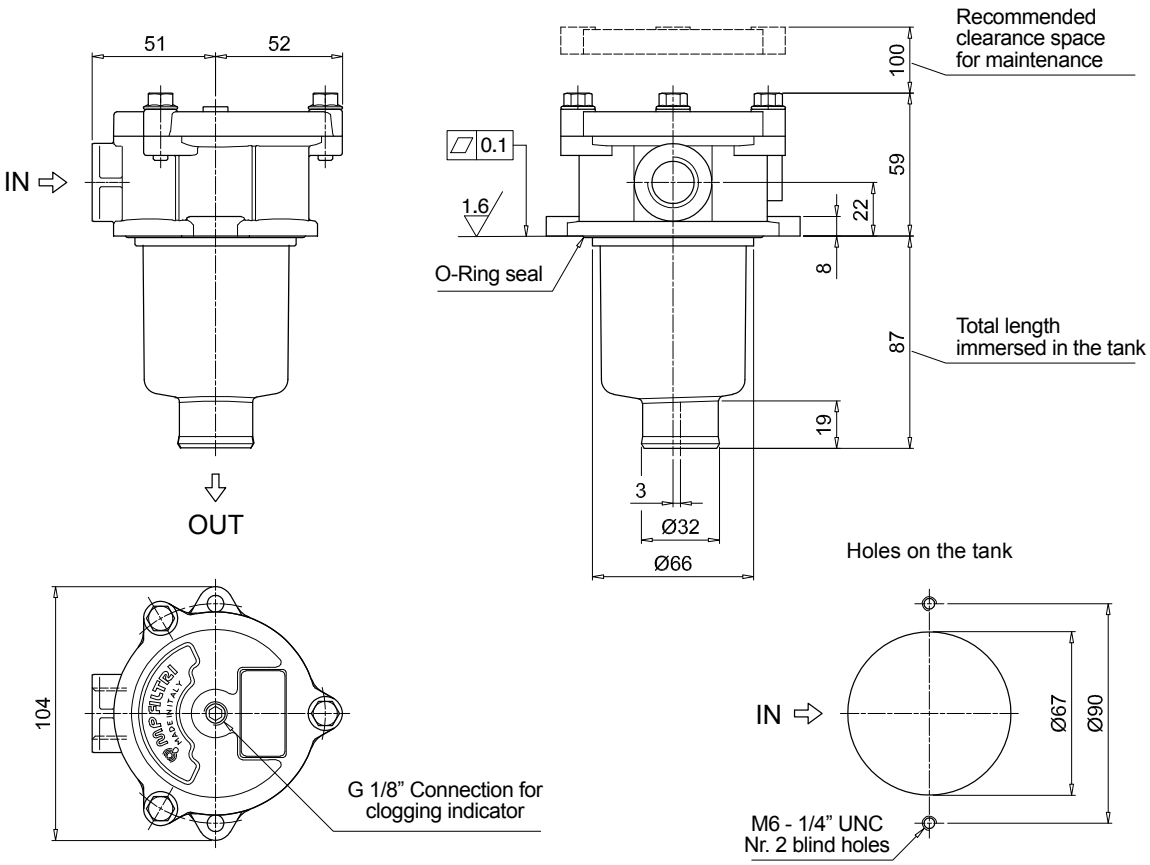

MPF MPF100 - MPF104

Designation & Ordering code

COMPLETE FILTER

Configuration example 1:	MPF100	2	W	G3	A06	W	B	P01
Configuration example 2:	MPF104	4	A	G8	P10	N	E	P01

Series and size

MPF100 | **MPF104** Filter element with standard spigot

Length

1 | **2** | **3** | **4** |

Seals and treatments

A	NBR
V	FPM
W	NBR head anodized
Z	FPM head anodized

Connections		Size 100	Size 104
G1	G 1/2"	•	•
G2	G 3/4"	•	•
G3	G 1"	•	•
G4	1/2" NPT	•	•
G5	3/4" NPT	•	•
G6	1" NPT	•	•

Connections		Size 100	Size 104
G7	SAE 8 - 3/4" - 16 UNF	•	•
G8	SAE 12 - 1 1/16" - 12 UN	•	•
G9	SAE 16 - 1 5/16" - 12 UN	•	•

Filtration rating (filter media)

A03	Inorganic microfiber 3 µm	**M25**	Wire mesh 25 µm
A06	Inorganic microfiber 6 µm	**M60**	Wire mesh 60 µm
A10	Inorganic microfiber 10 µm	**M90**	Wire mesh 90 µm
A16	Inorganic microfiber 16 µm	**P10**	Resin impregnated paper 10 µm
A25	Inorganic microfiber 25 µm	**P25**	Resin impregnated paper 25 µm

Element Δp		Filter media Axx	Mxx	Pxx
N	10 bar		•	•
H	10 bar	•		
W	10 bar, compatible with fluids HFA, HFB and HFC	•	•	

Bypass valve

E	3 bar
B	1.75 bar

Execution

P01	MP Filtri standard
Pxx	Customized

FILTER ELEMENT

Configuration example 1:	MF100	2	A06	W	B		P01
Configuration example 2:	MF100	4	P10	N	B	E	P01

Element series and size

MF100 Filter element with standard spigot

Element length

1 | **2** | **3** | **4** |

Filtration rating (filter media)

A03	Inorganic microfiber 3 µm	**M25**	Wire mesh 25 µm
A06	Inorganic microfiber 6 µm	**M60**	Wire mesh 60 µm
A10	Inorganic microfiber 10 µm	**M90**	Wire mesh 90 µm
A16	Inorganic microfiber 16 µm	**P10**	Resin impregnated paper 10 µm
A25	Inorganic microfiber 25 µm	**P25**	Resin impregnated paper 25 µm

Element Δp		Filter media Axx	Mxx	Pxx
N	10 bar		•	•
H	10 bar	•		
W	10 bar, compatible with fluids HFA, HFB and HFC	•	•	

Seals

B	NBR
V	FPM

Bypass valve

E	3 bar
	1.75 bar

Execution

P01	MP Filtri standard
Pxx	Customized

ACCESSORIES

Indicators		page
BVA	Axial pressure gauge	240
BVR	Radial pressure gauge	240
BVP	Visual pressure indicator with automatic reset	241
BVQ	Visual pressure indicator with manual reset	241
BEA	Electrical pressure indicator	239
BEM	Electrical pressure indicator	239
BLA	Electrical / visual pressure indicator	239-240

Additional features		page
TE	Extension tube	248
DFS	Diffuser with fast lock connection	249
T5	Filler plug M30x1.5	249
DPT	Dipstick	249

Dimensions

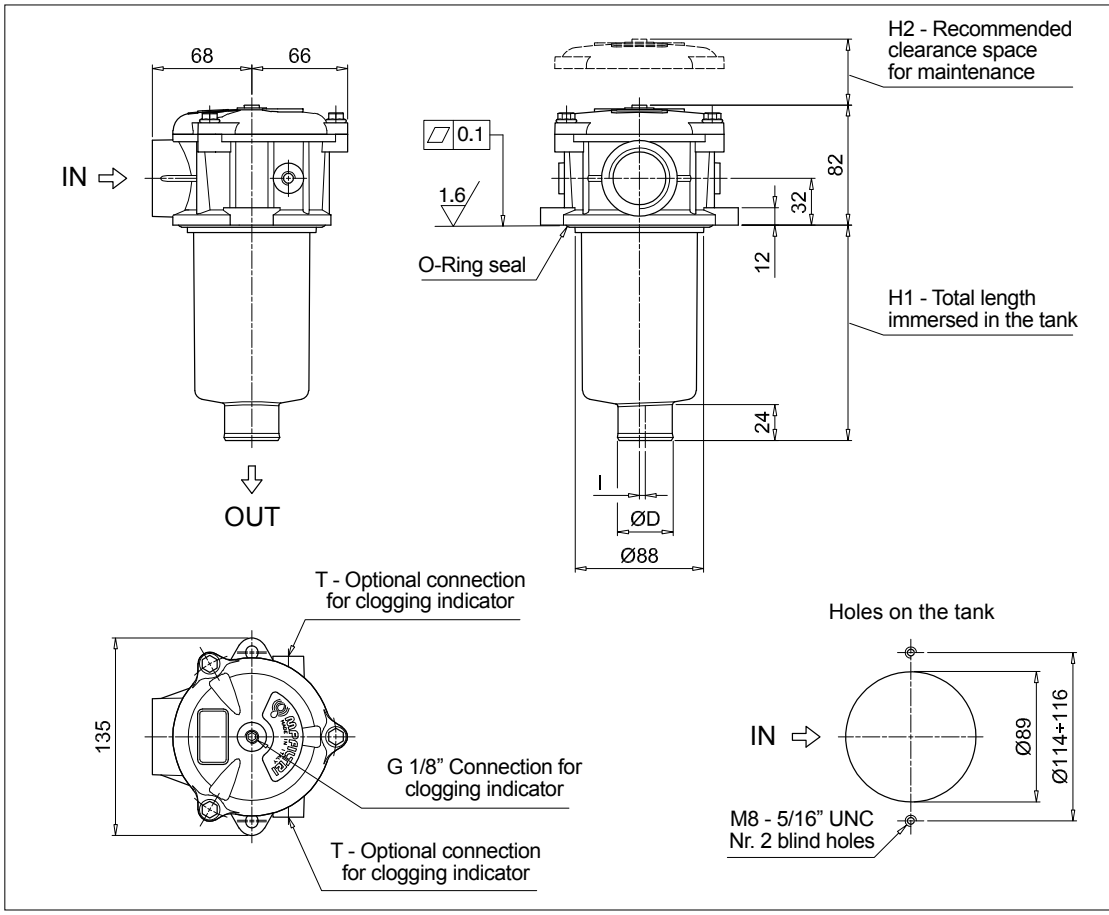

MPF100

Filter length	H1 [mm]	H2 [mm]	D [mm]	l [mm]
1	100	120	38	4
2	147	170	38	4
3	225	250	47	-
4	327	350	47	2.5

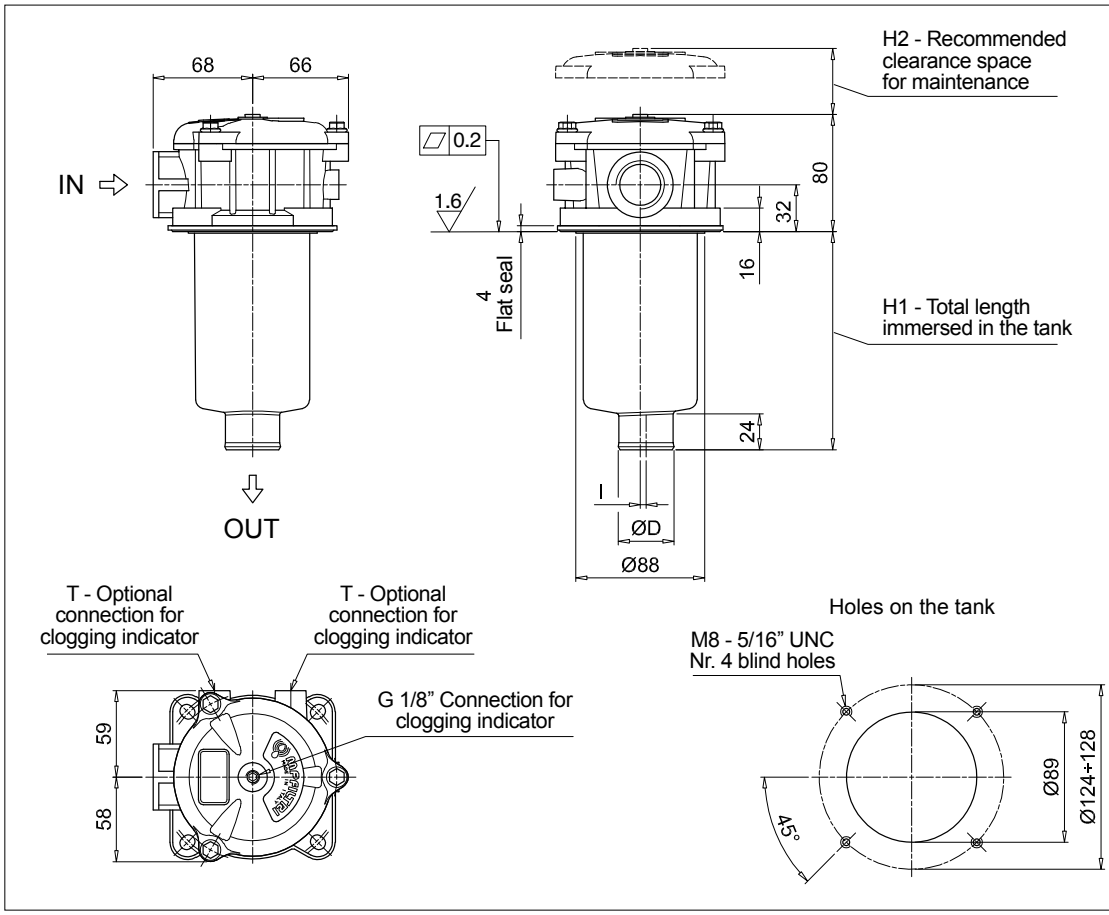

MPF104

Filter length	H1 [mm]	H2 [mm]	D [mm]	l [mm]
1	98	120	38	4
2	145	170	38	4
3	223	250	47	-
4	325	350	47	2.5

Designation & Ordering code

COMPLETE FILTER

Configuration example 1:	MPF110	2	A	G2	1	A16	H	E	P01
Configuration example 2:	MPF110	4	V	G12	1	M60	N	B	P01

Series and size

MPF110 Filter element with standard spigot

Length

1 | **2** | **3** | **4** |

Seals and treatments

A	NBR	**W**	NBR head anodized
V	FPM	**Z**	FPM head anodized

Main Connections		Aux size 1	Aux size 2
G1	G 1/2"	G 3/8"	G 1/2"
G2	G 3/4"		
G3	G 1"		
G4	1/2" NPT	3/8" NPT	1/2" NPT
G5	3/4" NPT		
G6	1" NPT		

Main Connections		Aux size 1	Aux size 2
G7	SAE 8 - 3/4" - 16 UNF	SAE 6 - 9/16"- 18 UNF	SAE 8 - 3/4"- 16 UNF
G8	SAE 12 - 1 1/16" - 12 UN		
G9	SAE 16 - 1 5/16" - 12 UN		
G10	G 1 1/4"	G 3/8"	G 1/2"
G11	1 1/4" NPT	3/8" NPT	1/2" NPT
G12	SAE 20 - 1 5/8" - 12 UN	SAE 6 - 9/16"- 18 UNF	SAE 8 - 3/4"- 16 UNF

Aux connection - see previous table

1	Aux size 1	**2**	Aux size 2

Filtration rating (filter media)

A03	Inorganic microfiber 3 µm	**M25**	Wire mesh 25 µm
A06	Inorganic microfiber 6 µm	**M60**	Wire mesh 60 µm
A10	Inorganic microfiber 10 µm	**M90**	Wire mesh 90 µm
A16	Inorganic microfiber 16 µm	**P10**	Resin impregnated paper 10 µm
A25	Inorganic microfiber 25 µm	**P25**	Resin impregnated paper 25 µm

Element Δp		Filter media Axx	Mxx	Pxx
N	10 bar		•	•
H	10 bar	•		
W	10 bar, compatible with fluids HFA, HFB and HFC	•	•	

Bypass valve

E	3 bar
B	1.75 bar

Execution

P01	MP Filtri standard
Pxx	Customized

FILTER ELEMENT

Configuration example 1:	MF100	2	A16	H	B	E	P01
Configuration example 2:	MF100	4	M60	N	V		P01

Element series and size

MF100 Filter element with standard spigot

Element length

1 | **2** | **3** | **4** |

Filtration rating (filter media)

A03	Inorganic microfiber 3 µm	**M25**	Wire mesh 25 µm
A06	Inorganic microfiber 6 µm	**M60**	Wire mesh 60 µm
A10	Inorganic microfiber 10 µm	**M90**	Wire mesh 90 µm
A16	Inorganic microfiber 16 µm	**P10**	Resin impregnated paper 10 µm
A25	Inorganic microfiber 25 µm	**P25**	Resin impregnated paper 25 µm

Element Δp		Filter media Axx	Mxx	Pxx
N	10 bar		•	•
H	10 bar	•		
W	10 bar, compatible with fluids HFA, HFB and HFC	•	•	

Seals

B	NBR
V	FPM

Bypass valve

E	3 bar
	1.75 bar

Execution

P01	MP Filtri standard
Pxx	Customized

ACCESSORIES

Indicators		page
BVA	Axial pressure gauge	240
BVR	Radial pressure gauge	240
BVP	Visual pressure indicator with automatic reset	241
BVQ	Visual pressure indicator with manual reset	241
BEA	Electrical pressure indicator	239
BEM	Electrical pressure indicator	239
BLA	Electrical / visual pressure indicator	239-240

Additional features		page
TE	Extension tube	248
DFS	Diffuser with fast lock connection	249
T5	Filler plug M30x1.5	249
DPT	Dipstick	249

Dimensions

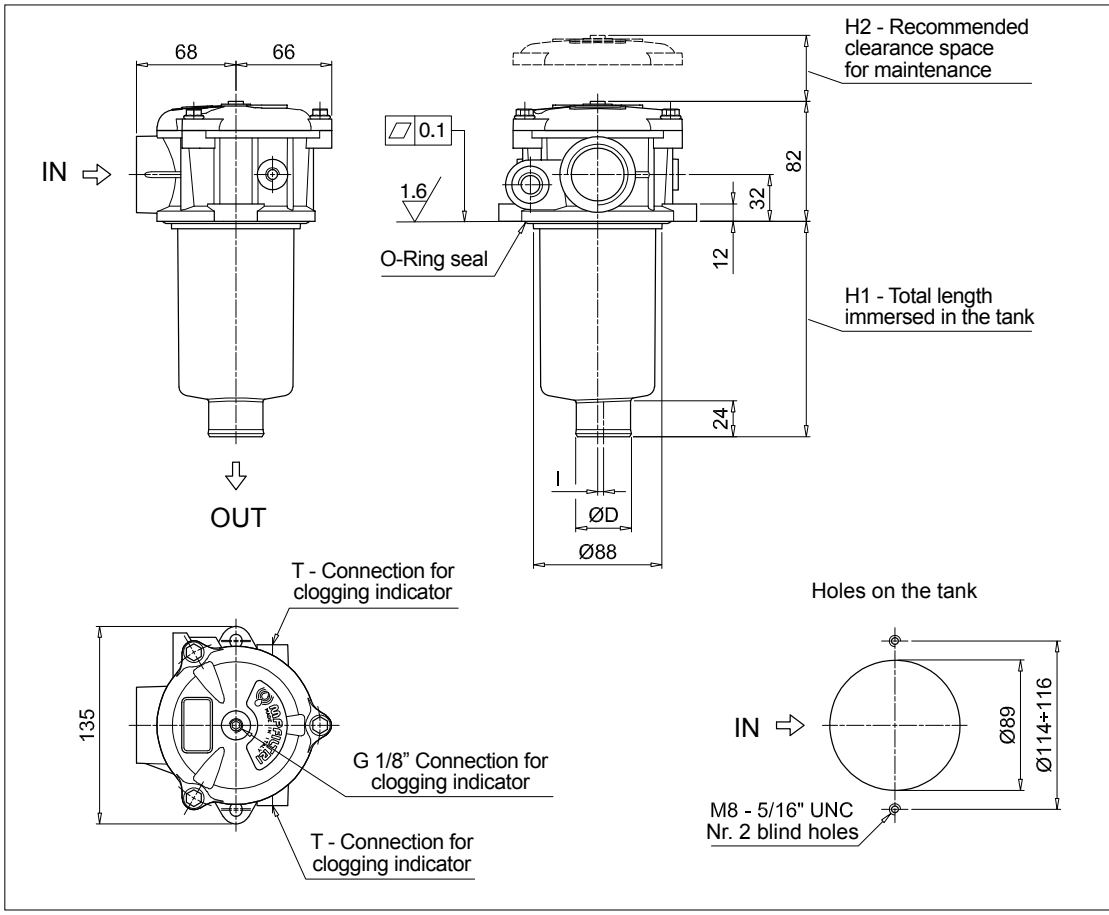

MPF110				
Filter length	H1 [mm]	H2 [mm]	D [mm]	l [mm]
1	100	120	38	4
2	147	170	38	4
3	225	250	47	-
4	327	350	47	2.5

Connections	T
G1-G2-G3	G 1/8”
G4-G5-G6-G7-G8-G9	1/8” NPT
G10	G 1/8”
G11-G12	1/8” NPT

Designation & Ordering code

COMPLETE FILTER

Configuration example 1:	MPF181	1	A	G1	A25	H	E	P01
Configuration example 2:	MPF191	2	V	G2	P10	N	B	P01

Series and size

MPF181 | **MPF191** Filter element with standard spigot

Length	Size 181	Size 191
1	•	
2	•	•

Seals and treatments

A	NBR		**B**	NBR	flat seal on head
V	FPM		**D**	FPM	flat seal on head
W	NBR	head anodized	**L**	NBR	head anodized, flat seal on head
Z	FPM	head anodized	**M**	FPM	head anodized, flat seal on head

Connections

G1	G 1 1/4”	**G5**	1 1/2” NPT
G2	G 1 1/2”	**G7**	SAE 20 - 1 5/8” - 12 UN
G4	1 1/4” NPT	**G8**	SAE 24 - 1 7/8” - 12 UN

Filtration rating (filter media)

A03	Inorganic microfiber 3 µm	**M25**	Wire mesh 25 µm
A06	Inorganic microfiber 6 µm	**M60**	Wire mesh 60 µm
A10	Inorganic microfiber 10 µm	**M90**	Wire mesh 90 µm
A16	Inorganic microfiber 16 µm	**P10**	Resin impregnated paper 10 µm
A25	Inorganic microfiber 25 µm	**P25**	Resin impregnated paper 25 µm

Element Δp		Filter media Axx	Mxx	Pxx
N	10 bar		•	•
H	10 bar	•		
W	10 bar, compatible with fluids HFA, HFB and HFC	•	•	

Bypass valve	
E	3 bar
B	1.75 bar

Execution	
P01	MP Filtri standard
Pxx	Customized

FILTER ELEMENT

Configuration example 1:	MF180	1	A25	H	B	E	P01
Configuration example 2:	MF190	2	P10	N	V		P01

Element series and size

MF180 | **MF190** Filter element with standard spigot

Element length	Size 180	Size 190
1	•	
2	•	•

Filtration rating (filter media)

A03	Inorganic microfiber 3 µm	**M25**	Wire mesh 25 µm
A06	Inorganic microfiber 6 µm	**M60**	Wire mesh 60 µm
A10	Inorganic microfiber 10 µm	**M90**	Wire mesh 90 µm
A16	Inorganic microfiber 16 µm	**P10**	Resin impregnated paper 10 µm
A25	Inorganic microfiber 25 µm	**P25**	Resin impregnated paper 25 µm

Element Δp		Filter media Axx	Mxx	Pxx
N	10 bar		•	•
H	10 bar	•		
W	10 bar, compatible with fluids HFA, HFB and HFC	•	•	

Seals	
B	NBR
V	FPM

Bypass valve	
E	3 bar
	1.75 bar

Execution	
P01	MP Filtri standard
Pxx	Customized

ACCESSORIES

Indicators		page
BVA	Axial pressure gauge	240
BVR	Radial pressure gauge	240
BVP	Visual pressure indicator with automatic reset	241
BVQ	Visual pressure indicator with manual reset	241
BEA	Electrical pressure indicator	239
BEM	Electrical pressure indicator	239
BLA	Electrical / visual pressure indicator	239-240

Additional features		page
TE	Extension tube	248
Sxx	Extension tube	248
T5	Filler plug M30x1.5	249

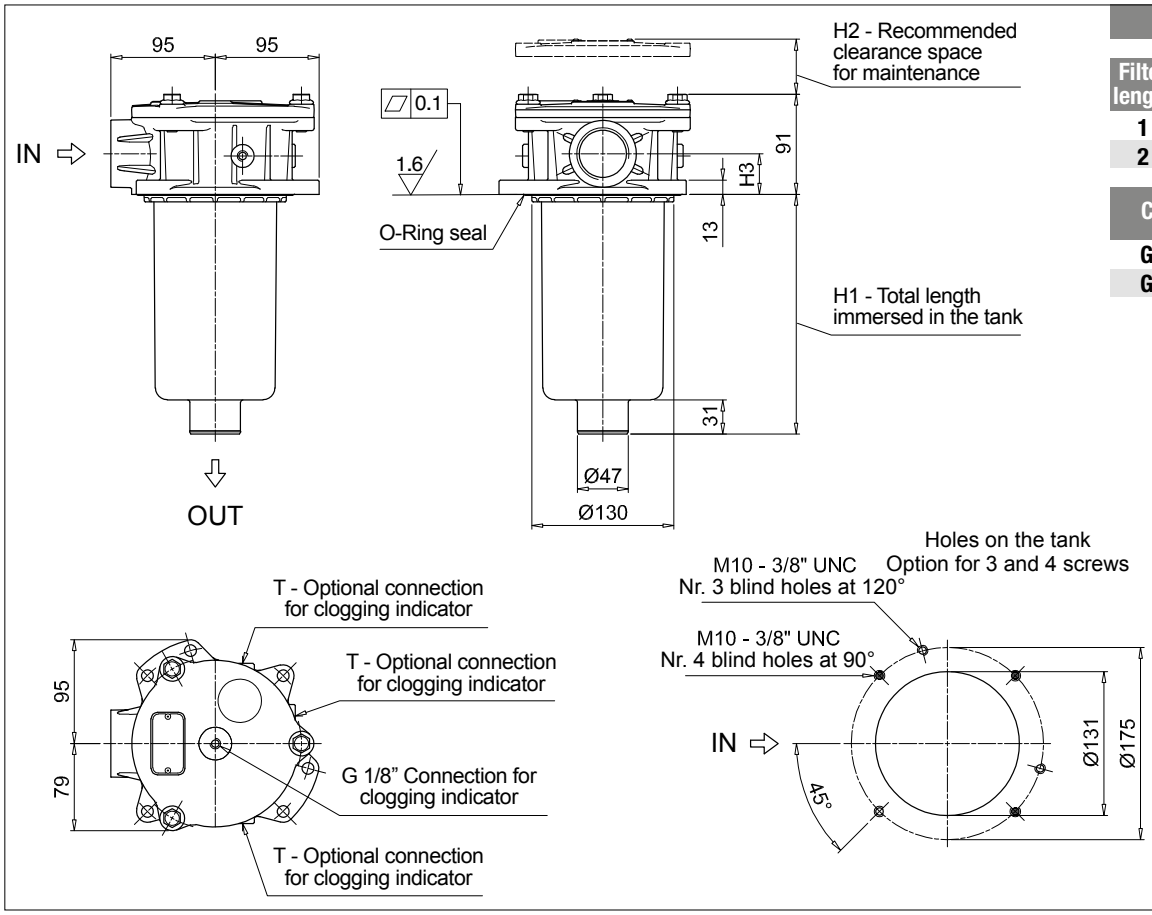

MPF181

Filter length	H1 [mm]	H2 [mm]
1	235	255
2	448	475

Connections	H3 [mm]
G1 - G4 - G7	35
G2 - G5 - G8	37

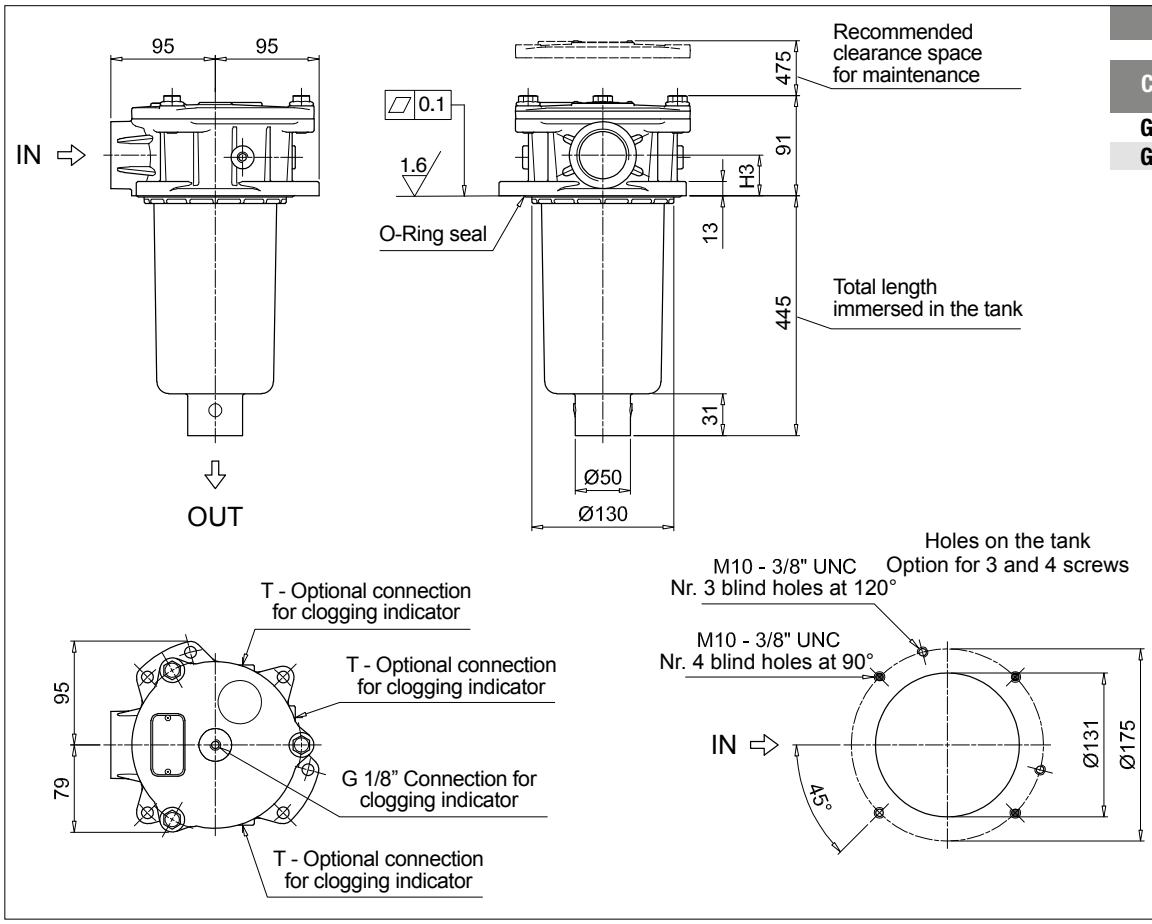

MPF191

Connections	H3 [mm]
G1 - G4 - G7	35
G2 - G5 - G8	37

MPF MPF182 - MPF192

Designation & Ordering code

COMPLETE FILTER

Configuration example 1:	MPF182	1	A	G1	1	A25	H	E	P01
Configuration example 2:	MPF192	2	V	G4	2	P10	N	B	P01

Series and size

MPF182 | **MPF192** Filter element with standard spigot

Length	Size 182	Size 192
1	•	
2	•	•

Seals and treatments

A	NBR		**B**	NBR	flat seal on head
V	FPM		**D**	FPM	flat seal on head
W	NBR	head anodized	**L**	NBR	head anodized, flat seal on head
Z	FPM	head anodized	**M**	FPM	head anodized, flat seal on head

Main Connections		Aux size 1	Aux size 2
G1	G 1 1/4"	G 1/2"	G 3/4"
G4	1 1/4" NPT	1/2" NPT	3/4" NPT
G7	SAE 20 - 1 5/8" - 12 UN	SAE 8 - 3/16"- 16 UNF	SAE 12 - 1 1/16"- 12 UN

Aux connection - see previous table

1	Aux size 1	**2**	Aux size 2

Filtration rating (filter media)

A03	Inorganic microfiber 3 µm	**M25**	Wire mesh 25 µm
A06	Inorganic microfiber 6 µm	**M60**	Wire mesh 60 µm
A10	Inorganic microfiber 10 µm	**M90**	Wire mesh 90 µm
A16	Inorganic microfiber 16 µm	**P10**	Resin impregnated paper 10 µm
A25	Inorganic microfiber 25 µm	**P25**	Resin impregnated paper 25 µm

Element Δp		Filter media Axx	Mxx	Pxx
N	10 bar		•	•
H	10 bar	•		
W	10 bar, compatible with fluids HFA, HFB and HFC	•	•	

Bypass valve

E	3 bar
B	1.75 bar

Execution

P01	MP Filtri standard
Pxx	Customized

FILTER ELEMENT

Configuration example 1:	MF180	1	A25	H	B	E	P01
Configuration example 2:	MF190	2	P10	N	V		P01

Element series and size

MF180 | **MF190** Filter element with standard spigot

Element length	Size 180	Size 190
1	•	
2	•	•

Filtration rating (filter media)

A03	Inorganic microfiber 3 µm	**M25**	Wire mesh 25 µm
A06	Inorganic microfiber 6 µm	**M60**	Wire mesh 60 µm
A10	Inorganic microfiber 10 µm	**M90**	Wire mesh 90 µm
A16	Inorganic microfiber 16 µm	**P10**	Resin impregnated paper 10 µm
A25	Inorganic microfiber 25 µm	**P25**	Resin impregnated paper 25 µm

Element Δp		Filter media Axx	Mxx	Pxx
N	10 bar		•	•
H	10 bar	•		
W	10 bar, compatible with fluids HFA, HFB and HFC	•	•	

Seals

B	NBR
V	FPM

Bypass valve

E	3 bar
	1.75 bar

Execution

P01	MP Filtri standard
Pxx	Customized

ACCESSORIES

Indicators		page
BVA	Axial pressure gauge	240
BVR	Radial pressure gauge	240
BVP	Visual pressure indicator with automatic reset	241
BVQ	Visual pressure indicator with manual reset	241
BEA	Electrical pressure indicator	239
BEM	Electrical pressure indicator	239
BLA	Electrical / visual pressure indicator	239-240

Additional features		page
TE	Extension tube	248
Sxx	Extension tube	248
T5	Filler plug M30x1.5	249

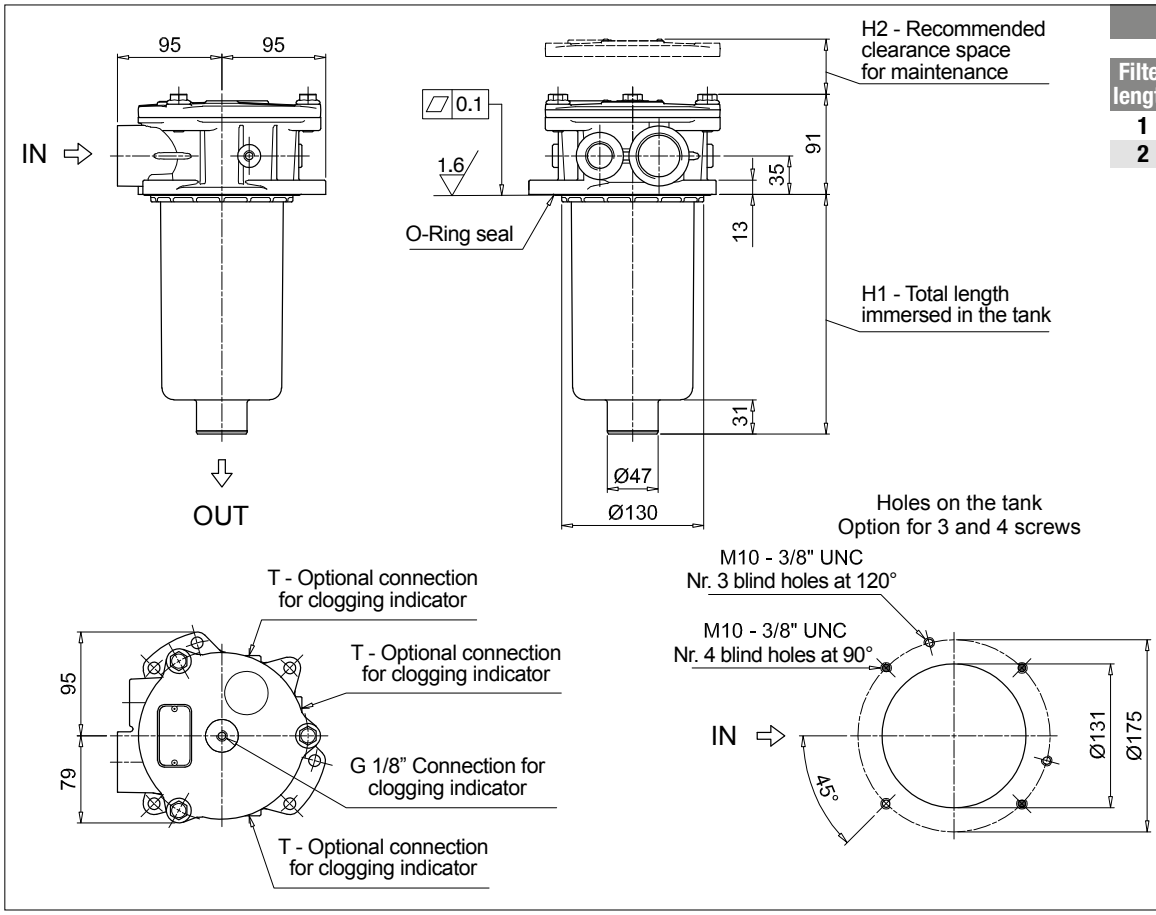

MPF182

Filter length	H1 [mm]	H2 [mm]
1	235	255
2	448	475

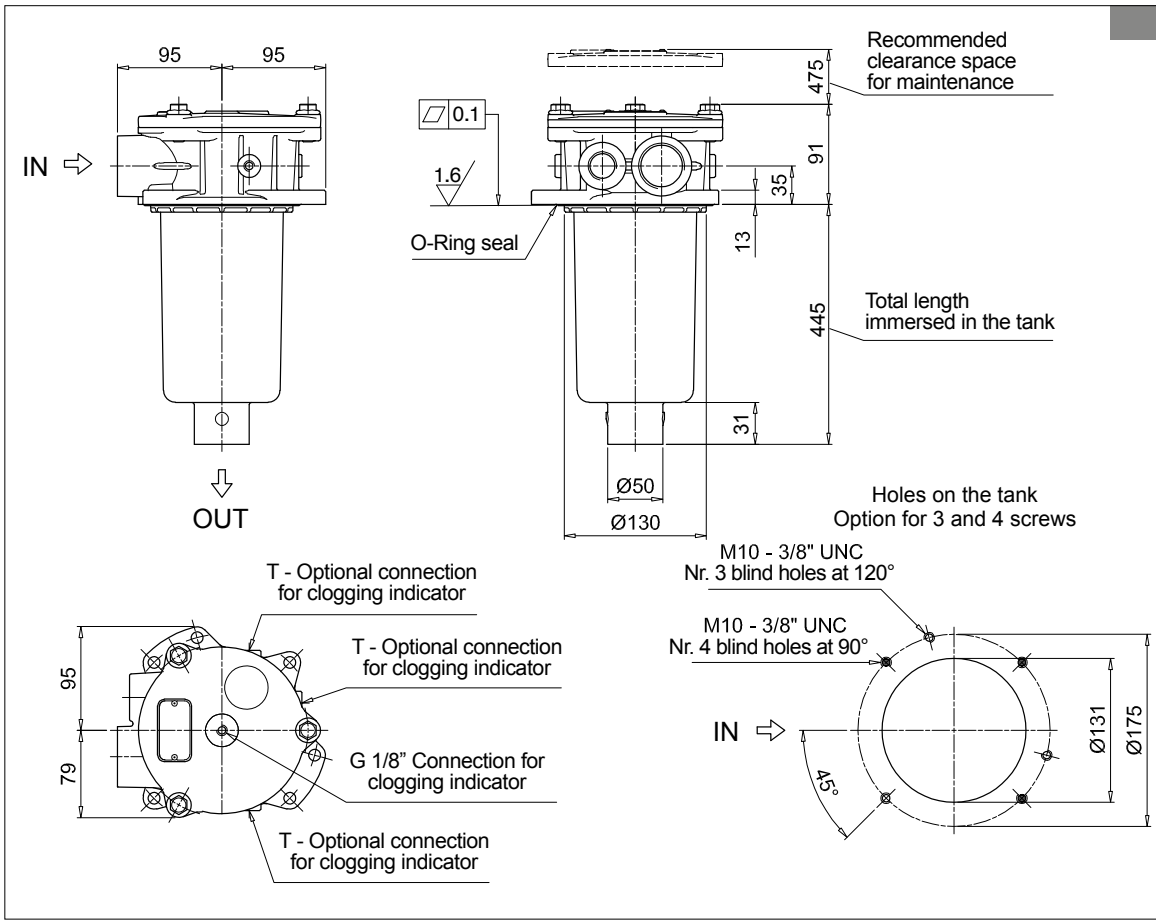

MPF192

Designation & Ordering code

COMPLETE FILTER

Configuration example 1:	MPF184	1	A	G1	A25	H	E	P01
Configuration example 2:	MPF194	2	V	F3	P10	N	B	P01

Series and size

MPF184 | **MPF194** Filter element with standard spigot

Length	Size 184	Size 194
1	•	
2	•	•

Seals and treatments

A	NBR	**W**	NBR head anodized
V	FPM	**Z**	FPM head anodized

Main Connections	Rear connections	Main Connections	Rear connections
G1 G 1 1/4"	-	**G13** G 1 1/2"	-
G2 G 1 1/4"	G 1 1/4"	**G14** G 1 1/2"	G 1 1/4"
G4 1 1/4" NPT	-	**G15** 1 1/2" NPT	-
G5 1 1/4" NPT	1 1/4" NPT	**G16** 1 1/2" NPT	1 1/4" NPT
G7 SAE 20 - 1 5/8" - 12 UN	-	**F1** 1 1/2" SAE 3000 psi/M	-
G8 SAE 20 - 1 5/8" - 12 UN	SAE 20 - 1 5/8" - 12 UN	**F2** 1 1/2" SAE 3000 psi/UNC	-
G10 SAE 24 - 1 7/8" - 12 UN	-	**F3** 1 1/2" SAE 3000 psi/M	1 1/2" SAE 3000 psi/M
G11 SAE 24 - 1 7/8" - 12 UN	SAE 20 - 1 5/8" - 12 UN	**F4** 1 1/2" SAE 3000 psi/UNC	1 1/2" SAE 3000 psi/UNC

Filtration rating (filter media)

A03	Inorganic microfiber 3 µm	**M25**	Wire mesh 25 µm
A06	Inorganic microfiber 6 µm	**M60**	Wire mesh 60 µm
A10	Inorganic microfiber 10 µm	**M90**	Wire mesh 90 µm
A16	Inorganic microfiber 16 µm	**P10**	Resin impregnated paper 10 µm
A25	Inorganic microfiber 25 µm	**P25**	Resin impregnated paper 25 µm

Element Δp	Axx	Mxx	Pxx
N 10 bar		•	•
H 10 bar	•		
W 10 bar, compatible with fluids HFA, HFB and HFC	•	•	

Bypass valve

E	3 bar
B	1.75 bar

Execution

P01	MP Filtri standard
Pxx	Customized

FILTER ELEMENT

Configuration example 1:	MF180	1	A25	H	B	E	P01
Configuration example 2:	MF190	2	P10	N	V		P01

Element series and size

MF180 | **MF190** Filter element with standard spigot

Element length	Size 180	Size 190
1	•	
2	•	•

Filtration rating (filter media)

A03	Inorganic microfiber 3 µm	**M25**	Wire mesh 25 µm
A06	Inorganic microfiber 6 µm	**M60**	Wire mesh 60 µm
A10	Inorganic microfiber 10 µm	**M90**	Wire mesh 90 µm
A16	Inorganic microfiber 16 µm	**P10**	Resin impregnated paper 10 µm
A25	Inorganic microfiber 25 µm	**P25**	Resin impregnated paper 25 µm

Element Δp	Axx	Mxx	Pxx
N 10 bar		•	•
H 10 bar	•		
W 10 bar, compatible with fluids HFA, HFB and HFC	•	•	

Seals

B	NBR
V	FPM

Bypass valve

E	3 bar
	1.75 bar

Execution

P01	MP Filtri standard
Pxx	Customized

ACCESSORIES

Indicators		page
BVA	Axial pressure gauge	240
BVR	Radial pressure gauge	240
BVP	Visual pressure indicator with automatic reset	241
BVQ	Visual pressure indicator with manual reset	241
BEA	Electrical pressure indicator	239
BEM	Electrical pressure indicator	239
BLA	Electrical / visual pressure indicator	239-240

Additional features		page
TE	Extension tube	248
Sxx	Extension tube	248
T5	Filler plug M30x1.5	249

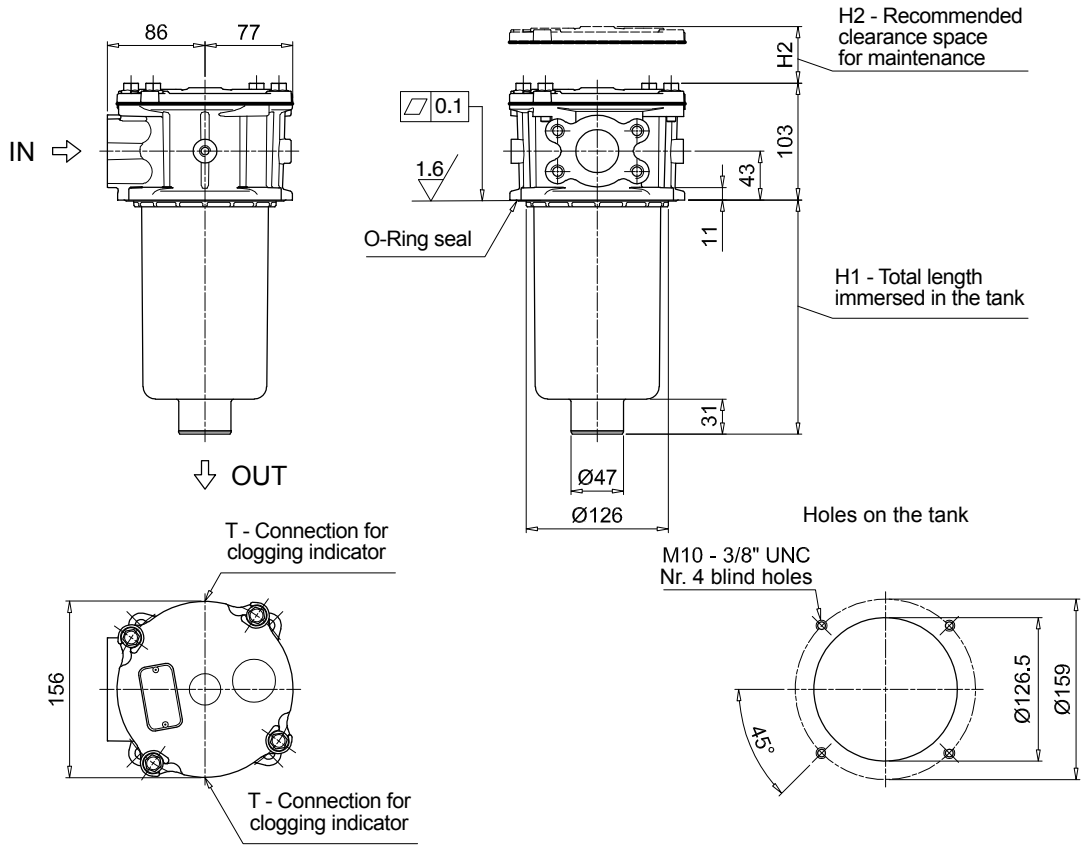

MPF184

1 connection port

Filter length	H1 [mm]	H2 [mm]
1	232	260
2	445	480

Connections	T
G1	G 1/8"
G4 - G7 - G10	1/8" NPT
G13	G 1/8"
G15 - F1 - F2	1/8" NPT

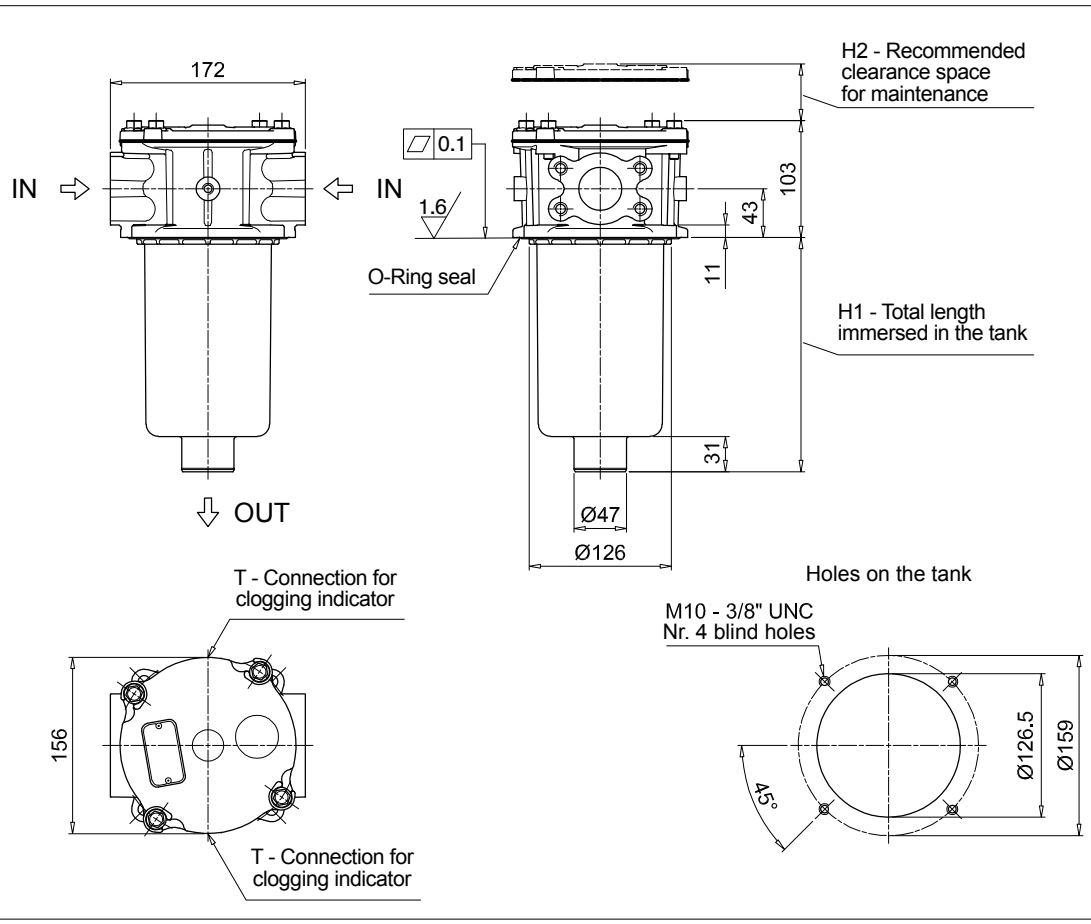

MPF184

2 connection ports

Filter length	H1 [mm]	H2 [mm]
1	232	260
2	445	480

Connections	T
G2	G 1/8"
G5 - G8 - G11	1/8" NPT
G14	G 1/8"
G16 - F3 - F4	1/8" NPT

Dimensions

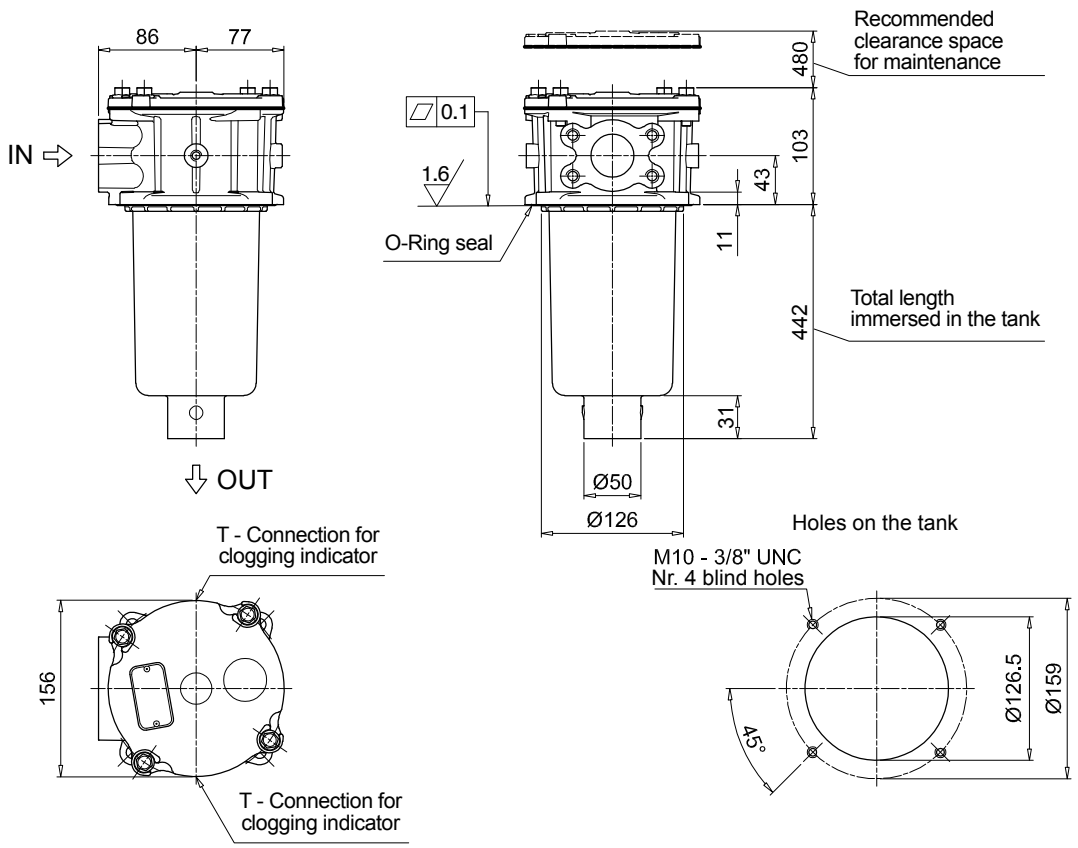

MPF194	
1 connection port	
Connections	**T**
G1	G 1/8"
G4 - G7 - G10	1/8" NPT
G13	G 1/8"
G15 - F1 - F2	1/8" NPT

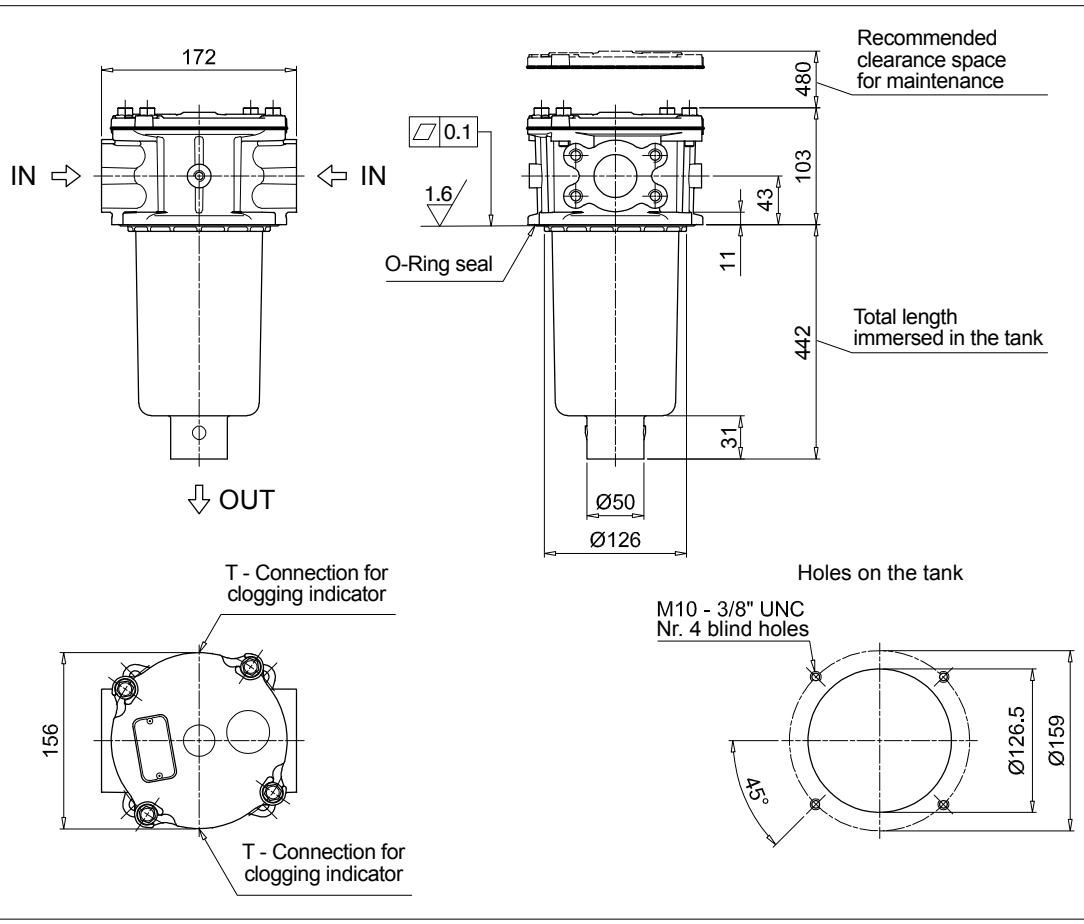

MPF194	
2 connection ports	
Connections	**T**
G2	G 1/8"
G5 - G8 - G11	1/8" NPT
G14	G 1/8"
G16 - F3 - F4	1/8" NPT

Designation & Ordering code

COMPLETE FILTER

Configuration example 1:	MPF400	1	A	G9	A25	H	B	P01
Configuration example 2:	MPF400	2	V	G4	P10	N	E	P01

Series and size

MPF400 Filter element with standard spigot

Length

1 | **2** | **3** |

Seals and treatments

A	NBR
V	FPM
W	NBR head anodized
Z	FPM head anodized

Connections

G1	G 1 1/4”	**G6**	2” NPT
G2	G 1 1/2”	**G7**	SAE 20 - 1 5/8” - 12 UN
G3	G 2”	**G8**	SAE 24 - 1 7/8” - 12 UN
G4	1 1/4” NPT	**G9**	SAE 32 - 2 1/2” - 12 UN
G5	1 1/2” NPT		

Filtration rating (filter media)

A03	Inorganic microfiber 3 µm	**M25**	Wire mesh 25 µm
A06	Inorganic microfiber 6 µm	**M60**	Wire mesh 60 µm
A10	Inorganic microfiber 10 µm	**M90**	Wire mesh 90 µm
A16	Inorganic microfiber 16 µm	**P10**	Resin impregnated paper 10 µm
A25	Inorganic microfiber 25 µm	**P25**	Resin impregnated paper 25 µm

Element Δp		Filter media Axx	Mxx	Pxx
N	10 bar		•	•
H	10 bar	•		
W	10 bar, compatible with fluids HFA, HFB and HFC	•	•	

Bypass valve

E	3 bar
B	1.75 bar

Execution

P01	MP Filtri standard
Pxx	Customized

FILTER ELEMENT

Configuration example 1:	MF400	1	A25	H	B		P01
Configuration example 2:	MF400	2	P10	N	V	E	P01

Element series and size

MF400 Filter element with standard spigot

Element length

1 | **2** | **3** |

Filtration rating (filter media)

A03	Inorganic microfiber 3 µm	**M25**	Wire mesh 25 µm
A06	Inorganic microfiber 6 µm	**M60**	Wire mesh 60 µm
A10	Inorganic microfiber 10 µm	**M90**	Wire mesh 90 µm
A16	Inorganic microfiber 16 µm	**P10**	Resin impregnated paper 10 µm
A25	Inorganic microfiber 25 µm	**P25**	Resin impregnated paper 25 µm

Element Δp		Filter media Axx	Mxx	Pxx
N	10 bar		•	•
H	10 bar	•		
W	10 bar, compatible with fluids HFA, HFB and HFC	•	•	

Seals

B	NBR
V	FPM

Bypass valve

E	3 bar
	1.75 bar

Execution

P01	MP Filtri standard
Pxx	Customized

ACCESSORIES

Indicators		page
BVA	Axial pressure gauge	240
BVR	Radial pressure gauge	240
BVP	Visual pressure indicator with automatic reset	241
BVQ	Visual pressure indicator with manual reset	241
BEA	Electrical pressure indicator	239
BEM	Electrical pressure indicator	239
BLA	Electrical / visual pressure indicator	239-240

Additional features		page
Sxx	Extension tube	248
T5	Filler plug M30x1.5	249

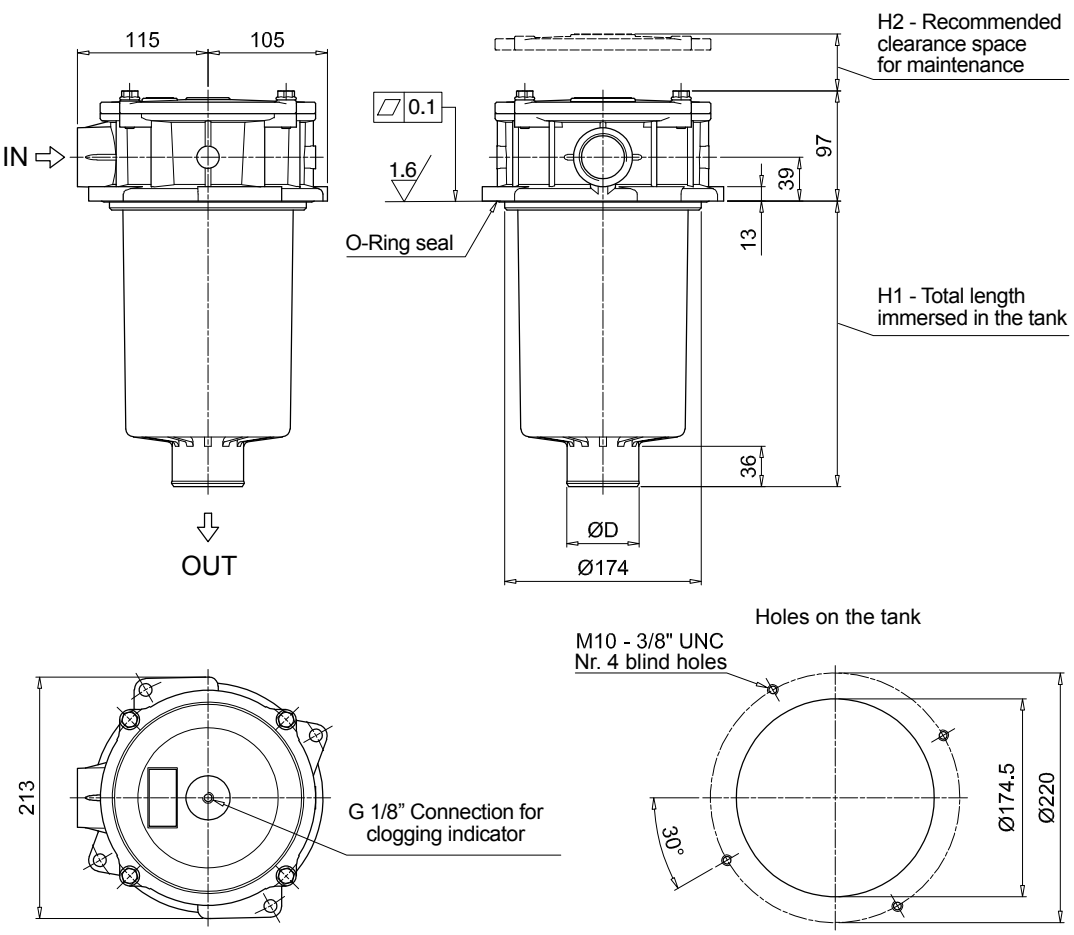

MPF400

Filter length	H1 [mm]	H2 [mm]	D [mm]
1	180	210	51
2	240	270	64
3	290	315	64

Designation & Ordering code

COMPLETE FILTER

Configuration example 1:	MPF410	1	A	G1	1	A25	H	B	P01
Configuration example 2:	MPF410	1	V	G4	1	P10	N	E	P01

Series and size

MPF410 Filter element with standard spigot

Length

1 | **2** | **3** |

Seals and treatments

A	NBR
V	FPM
W	NBR head anodized
Z	FPM head anodized

Main Connections		Aux size 1
G1	G 1 1/4"	G 1"
G4	1 1/4" NPT	1" NPT
G7	SAE 20 - 1 5/8" - 12 UN	SAE 16 - 1 5/16"- 12 UN

Aux connection - see previous table

1 Aux size 1

Filtration rating (filter media)

A03	Inorganic microfiber 3 µm	**M25**	Wire mesh 25 µm
A06	Inorganic microfiber 6 µm	**M60**	Wire mesh 60 µm
A10	Inorganic microfiber 10 µm	**M90**	Wire mesh 90 µm
A16	Inorganic microfiber 16 µm	**P10**	Resin impregnated paper 10 µm
A25	Inorganic microfiber 25 µm	**P25**	Resin impregnated paper 25 µm

Element Δp		Filter media Axx	Mxx	Pxx
N	10 bar		•	•
H	10 bar	•		
W	10 bar, compatible with fluids HFA, HFB and HFC	•	•	

Bypass valve

E	3 bar
B	1.75 bar

Execution

P01	MP Filtri standard
Pxx	Customized

FILTER ELEMENT

Configuration example 1:	MF400	1	A25	H	B		P01
Configuration example 2:	MF400	1	P10	N	V	E	P01

Element series and size

MF400 Filter element with standard spigot

Element length

1 | **2** | **3** |

Filtration rating (filter media)

A03	Inorganic microfiber 3 µm	**M25**	Wire mesh 25 µm
A06	Inorganic microfiber 6 µm	**M60**	Wire mesh 60 µm
A10	Inorganic microfiber 10 µm	**M90**	Wire mesh 90 µm
A16	Inorganic microfiber 16 µm	**P10**	Resin impregnated paper 10 µm
A25	Inorganic microfiber 25 µm	**P25**	Resin impregnated paper 25 µm

Element Δp		Filter media Axx	Mxx	Pxx
N	10 bar		•	•
H	10 bar	•		
W	10 bar, compatible with fluids HFA, HFB and HFC	•	•	

Seals

B	NBR
V	FPM

Bypass valve

E	3 bar
	1.75 bar

Execution

P01	MP Filtri standard
Pxx	Customized

ACCESSORIES

Indicators		page
BVA	Axial pressure gauge	240
BVR	Radial pressure gauge	240
BVP	Visual pressure indicator with automatic reset	241
BVQ	Visual pressure indicator with manual reset	241

		page
BEA	Electrical pressure indicator	239
BEM	Electrical pressure indicator	239
BLA	Electrical / visual pressure indicator	239-240

Additional features		page
Sxx	Extension tube	248
T5	Filler plug M30x1.5	249

Dimensions

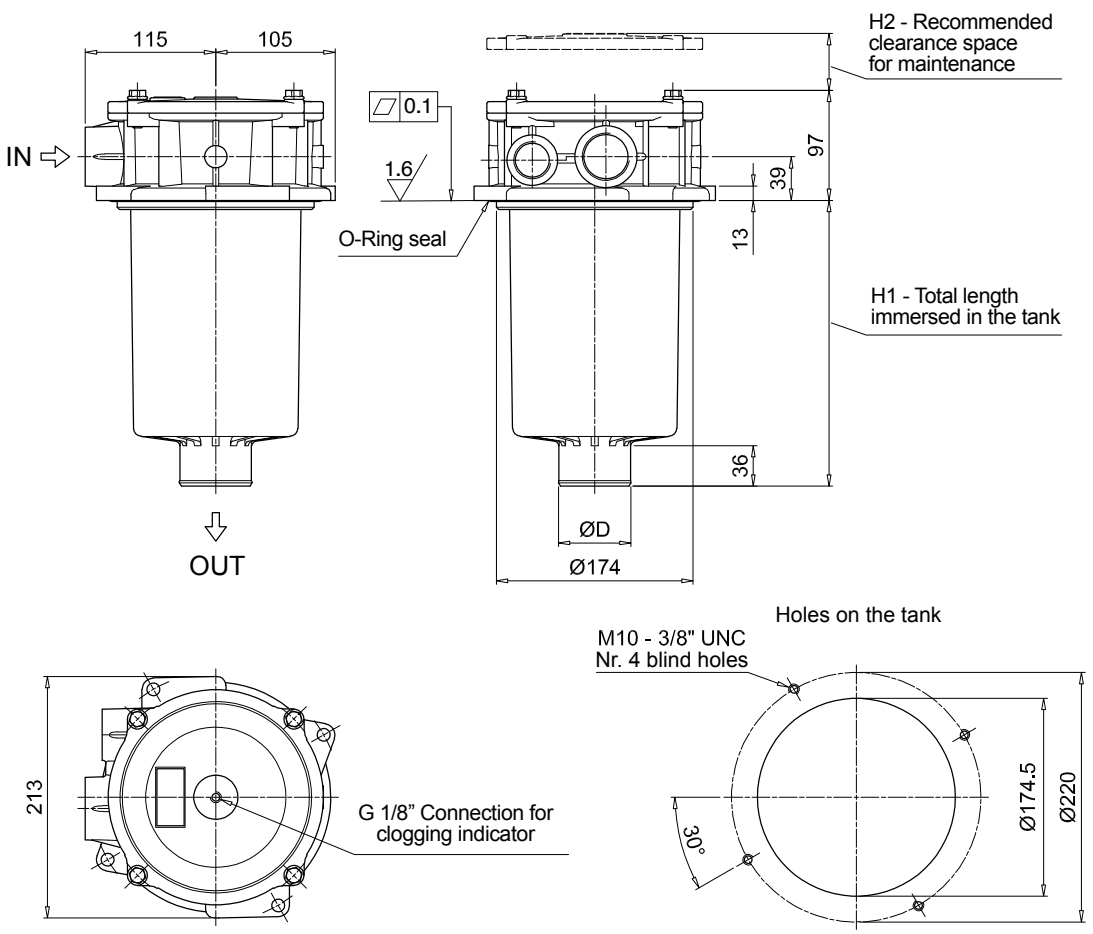

MPF410			
Filter length	H1 [mm]	H2 [mm]	D [mm]
1	180	210	51
2	240	270	64
3	290	315	64

MPF MPF450 - MPF451 - MPF750

Designation & Ordering code

COMPLETE FILTER

Configuration example 1:	MPF450	1	A	G1	A25	H	B	P01
Configuration example 2:	MPF750	1	V	F2	P10	N	E	P01

Series and size

MPF450 | **MPF451** | **MPF750** Filter element with standard spigot

Length	MPF 450	MPF 451	MPF 750
1	•	•	•
2	•	•	
3	•	•	

Seals and treatments

A	NBR		**W**	NBR	head anodized
V	FPM		**Z**	FPM	head anodized

Connections		Aux (only size 451)
G1	G 2”	G 3/4”
G4	2” NPT	3/4” NPT
G7	SAE 32 - 2 1/2” - 12 UN	SAE 12 - 1 1/16” - 12 UN
F1	2” SAE 3000 psi/M	G 3/4”
F2	2” SAE 3000 psi/UN	3/4” NPT

Filtration rating (filter media)

A03	Inorganic microfiber	3 µm	**M25**	Wire mesh	25 µm
A06	Inorganic microfiber	6 µm	**M60**	Wire mesh	60 µm
A10	Inorganic microfiber	10 µm	**M90**	Wire mesh	90 µm
A16	Inorganic microfiber	16 µm	**P10**	Resin impregnated paper	10 µm
A25	Inorganic microfiber	25 µm	**P25**	Resin impregnated paper	25 µm

Element Δp		Filter media Axx	Mxx	Pxx
N	10 bar		•	•
H	10 bar	•		
W	10 bar, compatible with fluids HFA, HFB and HFC	•	•	

Bypass valve	
E	3 bar
B	1.75 bar

Execution	
P01	MP Filtri standard
Pxx	Customized

FILTER ELEMENT

Configuration example 1:	MF400	1	A25	H	B		P01
Configuration example 2:	MFX750	1	P10	N	V	E	P01

Element series and size

MF400 | **MF750** Filter element with standard spigot

Element length	MPF 450	MPF 451	MPF 750
1	•	•	•
2	•	•	
3	•	•	

Filtration rating (filter media)

A03	Inorganic microfiber	3 µm	**M25**	Wire mesh	25 µm
A06	Inorganic microfiber	6 µm	**M60**	Wire mesh	60 µm
A10	Inorganic microfiber	10 µm	**M90**	Wire mesh	90 µm
A16	Inorganic microfiber	16 µm	**P10**	Resin impregnated paper	10 µm
A25	Inorganic microfiber	25 µm	**P25**	Resin impregnated paper	25 µm

Element Δp		Filter media Axx	Mxx	Pxx
N	10 bar		•	•
H	10 bar	•		
W	10 bar, compatible with fluids HFA, HFB and HFC	•	•	

Seals	
B	NBR
V	FPM

Bypass valve	
E	3 bar
	1.75 bar

Execution	
P01	MP Filtri standard
Pxx	Customized

ACCESSORIES

Indicators		page
BVA	Axial pressure gauge	240
BVR	Radial pressure gauge	240
BVP	Visual pressure indicator with automatic reset	241
BVQ	Visual pressure indicator with manual reset	241
BEA	Electrical pressure indicator	239
BEM	Electrical pressure indicator	239
BLA	Electrical / visual pressure indicator	239-240

Additional features		page
Sxx	Extension tube	248
T5	Filler plug M30x1.5	249

Dimensions

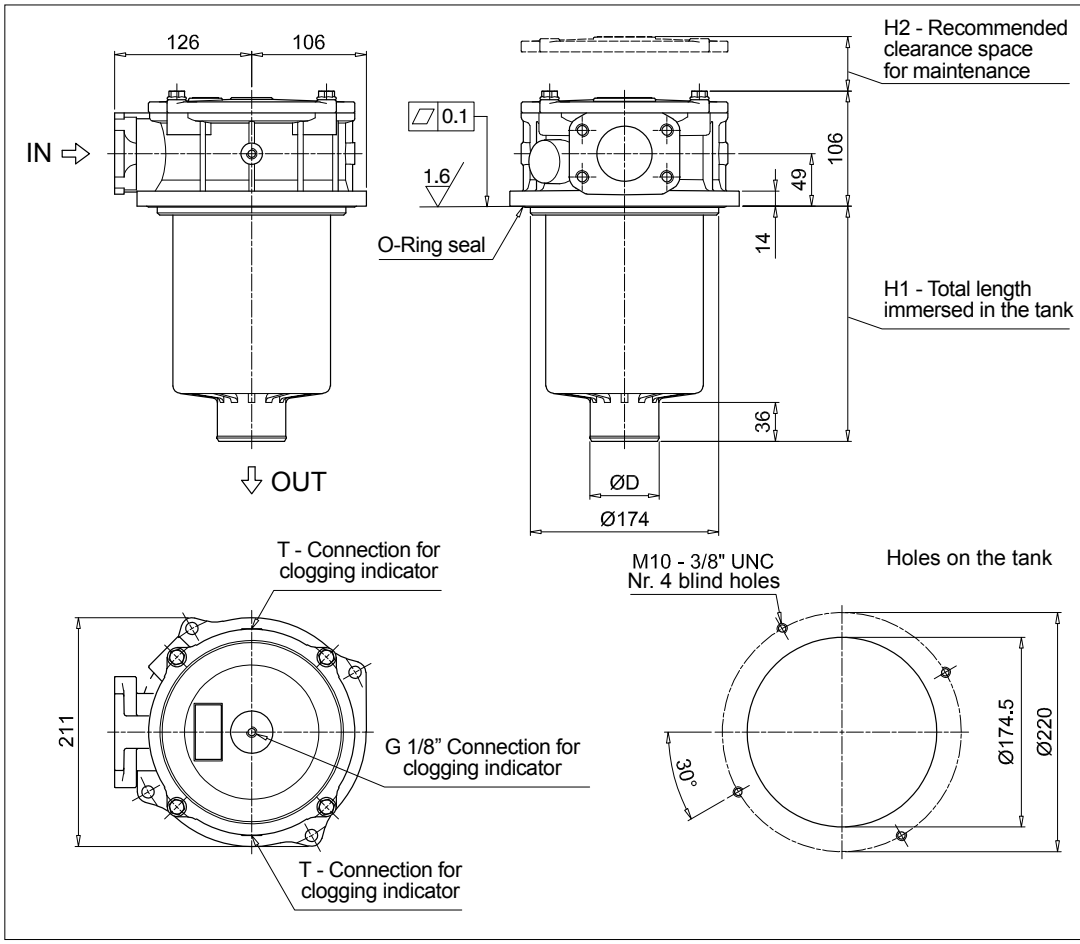

MPF450

Filter length	H1 [mm]	H2 [mm]	D [mm]
1	180	210	51
2	240	270	64
3	290	315	64

Connections	T
G1	G 1/8"
G4 - G7	1/8" NPT
F1	G 1/8"
F2	1/8" NPT

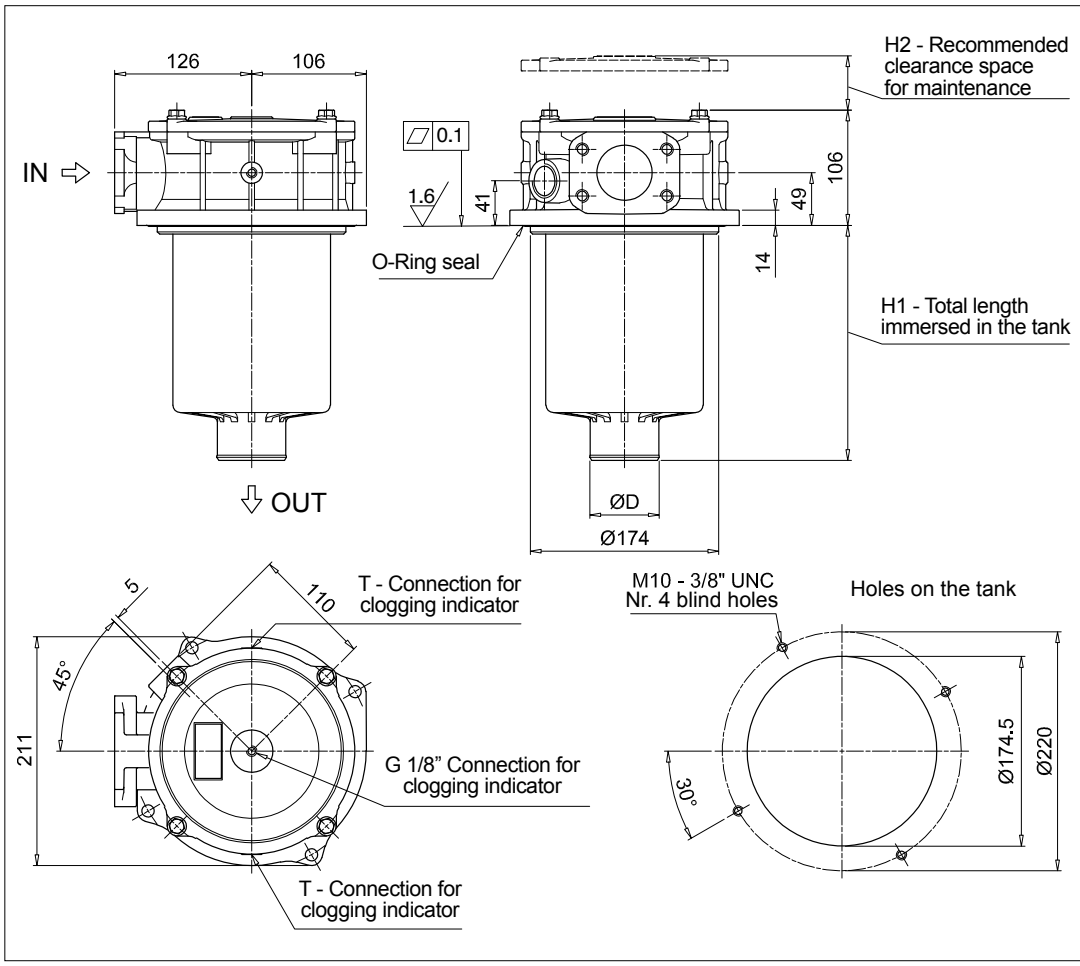

MPF451

Filter length	H1 [mm]	H2 [mm]	D [mm]
1	180	210	51
2	240	270	64
3	290	315	64

Connections	T
G1	G 1/8"
G4 - G7	1/8" NPT
F1	G 1/8"
F2	1/8" NPT

Dimensions

MPF750

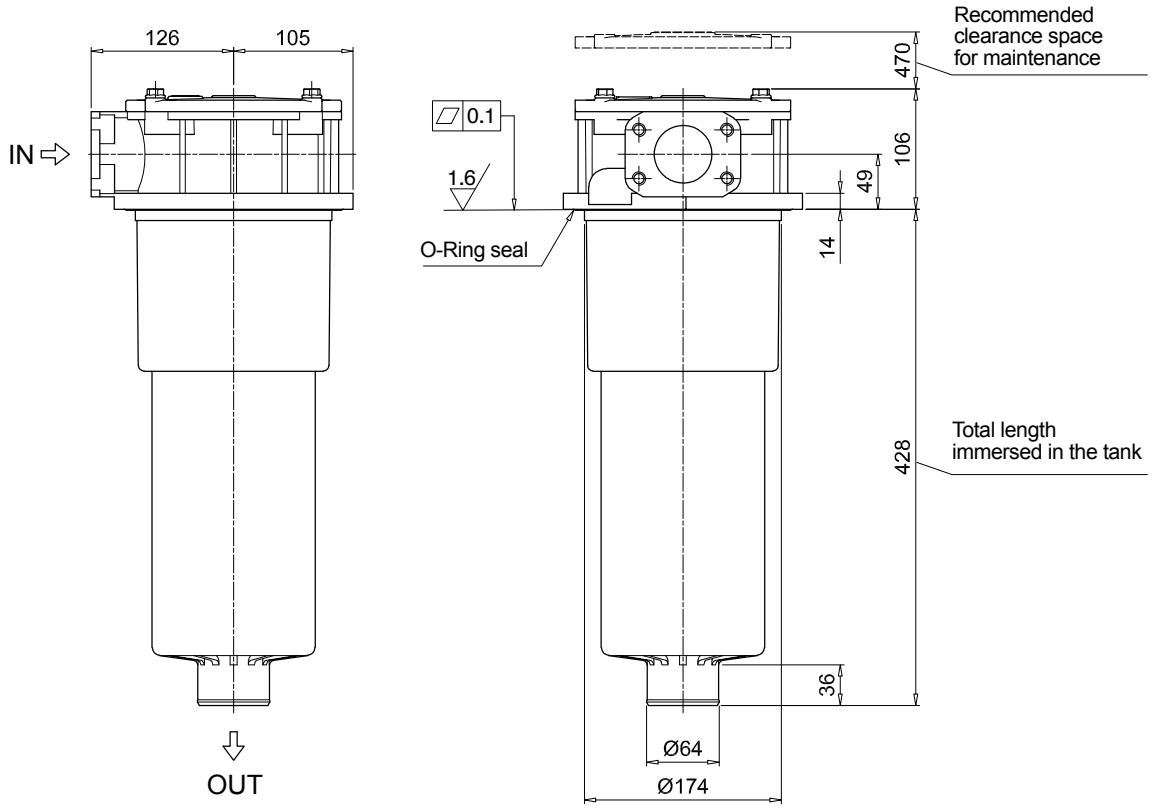

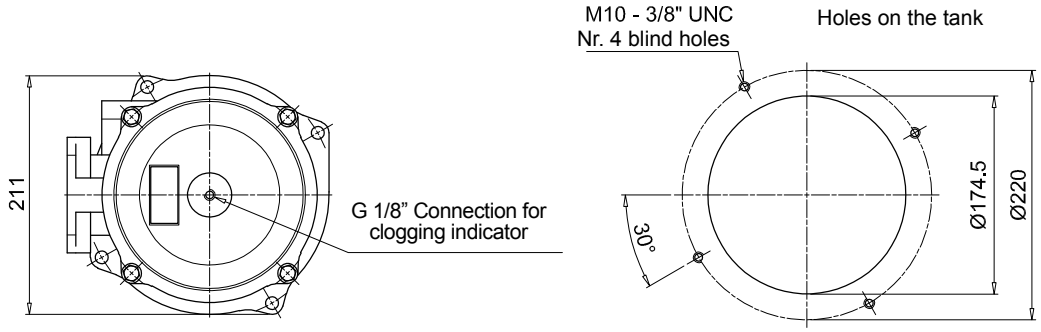

Order number for spare parts

MPF 100

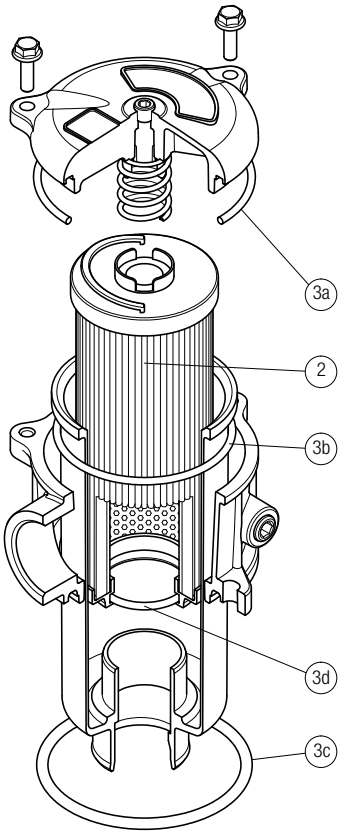

MPF 181

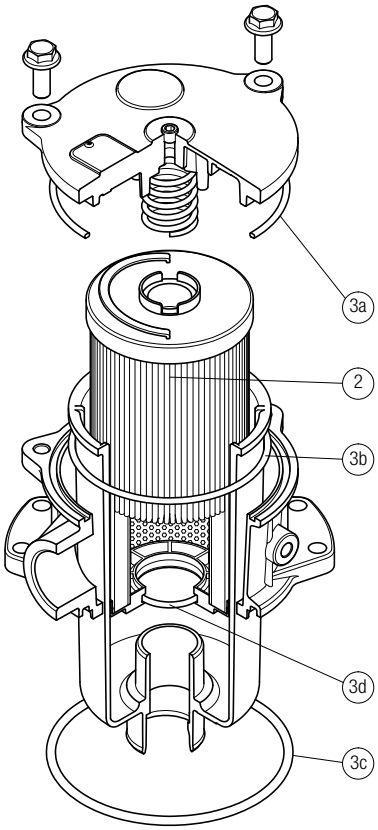

O-RING SEAL

Item:	Q.ty: 1 pc. 2	Q.ty: 1 pc. 3 (3a ÷ 3d)	
Filter series	**Filter element**	**Seal Kit code number NBR**	**FPM**
MPF 030	See order table	02050055	02050056
MPF 100-110		02050057	02050058
MPF 181-182		02050059	02050060
MPF 184		02050455	02050456
MPF 191-192		02050457	02050458
MPF 194		02050459	02050460
MPF 400-410		02050061	02050062
MPF 450-451		02050461	02050462
MPF 750		02050106	02050107

MPF 104

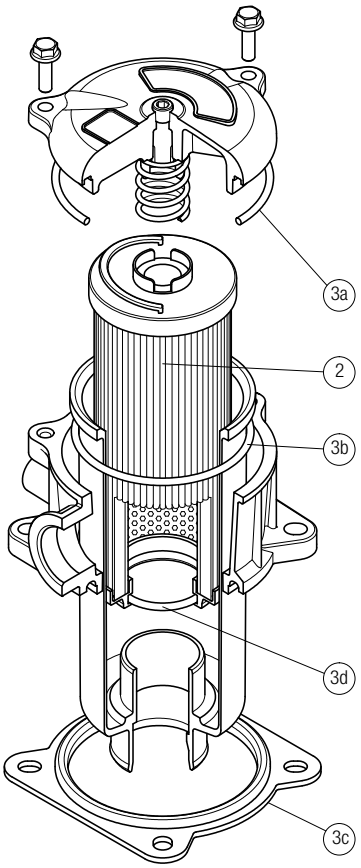

MPF 181

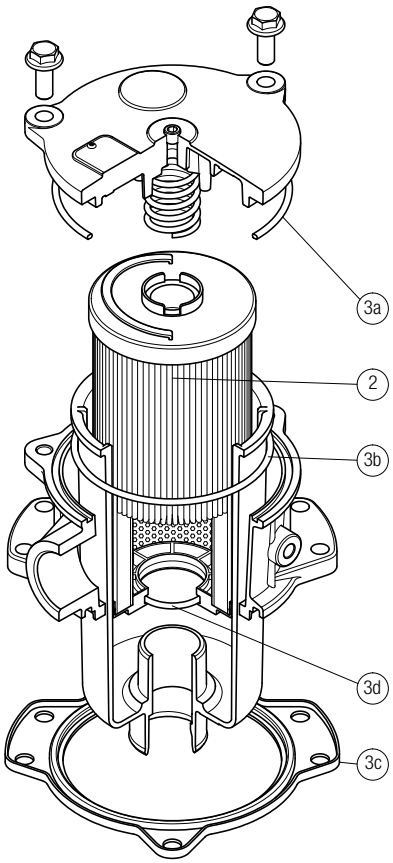

FLAT SEAL

Item:	Q.ty: 1 pc. 2	Q.ty: 1 pc. 3 (3a ÷ 3d)	
Filter series	**Filter element**	**Seal Kit code number NBR**	**FPM**
MPF 020	See order table	02050438	02050439
MPF 104		02050350	02050408
MPF 181-182		02050659	02050660
MPF 191-192		02050661	02050662

MPT series

Maximum working pressure up to 800 kPa (8 bar) - Flow rate up to 300 l/min

MPT GENERAL INFORMATION

Description

Return filter

Maximum working pressure up to 800 kPa (8 bar)
Flow rate up to 300 l/min

MPT is a range of return filters with integrated breather filter, for protection of the reservoir against the system contamination.
They are directly fixed to the reservoir, in immersed or semi-immersed position.
The filter output must be always immersed into the fluid to avoid aeration or foam generation into the reservoir.

Available features:
- Female threaded connections up to 1 1/4", for a maximum flow rate of 300 l/min
- Multiple connections, to connect several return lines or drains
- Fine filtration rating, to get a good cleanliness level into the reservoir
- Bypass valve integrated into the filter element, to relieve excessive pressure drop across the filter media
- 2, 3 or 6 fixing holes for installation, to suit a variety of reservoir surfaces
- O-ring or Flat Seal to suit a variety of reservoir surfaces
- Screw-in cover with a special shape, to allow the filter element replacement without the use of specific tools
- Oil dipstick, to easily check the level of the fluid into the reservoir (sold as separate item)
- Extension tube, to be used in deep reservoirs (sold as separate item)
- Diffuser, to reduce the risk of aeration, foaming and noise (sold as separate item)
- Integrated breather filter, to clean the air that moves into the reservoir as result of the oil level fluctuation
- Integrated breather filter with pressurization valve, to clean the air that moves into the reservoir as result of the oil level fluctuation and to guarantee the pressurization into the reservoir
- Visual, electrical and electronic clogging indicators

Common applications:
- Light industrial equipment
- Mobile application

Technical data

Filter housing materials
- Head: Aluminium
- Cover: Nylon
- Bowl: Nylon

Bypass valve
- Opening pressure 175 kPa (1.75 bar) ±10%
- Opening pressure 300 kPa (3 bar) ±10%

Δp element type
- Microfibre filter elements - series H: 10 bar
- Fluid flow through the filter element from OUT to IN

Seals
- Standard NBR series A
- Optional FPM series V

Temperature
From -25 °C to +110 °C

Note
MPT filters are provided for vertical mounting

Weights [kg] and volumes [dm³]

Filter series	Weights [kg]				Volumes [dm³]			
	Length 1	2	3	4	Length 1	2	3	4
MPT 025	0.41	0.45	0.50	-	0.24	0.35	0.42	-
MPT 027	0.44	0.48	0.55	-	0.24	0.35	0.42	-
MPT 110	1.00	1.05	1.15	1.40	0.72	0.93	1.28	1.74
MPT 114	1.10	1.15	1.25	1.50	0.72	0.93	1.28	1.74
MPT 116	1.10	1.15	1.25	1.50	0.72	0.93	1.28	1.74
MPT 120	1.00	1.05	1.15	1.40	0.72	0.93	1.28	1.74

FILTER ASSEMBLY SIZING
Flow rates [l/min]

Filter series	Length	Filter element design - H series					Filter element design - N series		
		A03	A06	A10	A16	A25	M25 M60 M90	P10	P25
MPT 025-027	**1**	7	10	23	28	42	59	51	54
	2	17	20	45	48	56	72	64	67
	3	21	24	50	55	59	76	74	75
MPT 110-114 116-120	**1**	18	20	53	56	65	153	87	96
	2	28	38	65	75	95	158	111	123
	3	48	55	125	135	169	289	224	251
	4	79	89	180	185	198	306	264	289

Maximum flow rate for a complete return filter with a pressure drop Δp = 0.5 bar.
The reference fluid has a kinematic viscosity of 30 mm^2/s (cSt) and a density of 0.86 kg/dm^3.
For different pressure drop or fluid viscosity we recommend to use our selection software available on www.mpfiltri.com.
You can also calculate the right size using the formulas present on the FILTER SIZING paragraph at the beginning of the full catalogue or at the beginning of the filter family brochure.
Please, contact our Sales Department for further additional information.

Hydraulic symbols

Filter series	Style 1 connection	Style 2 connections	Style 3 connections
MPT 025	•		
MPT 027	•		
MPT 110		•	
MPT 114	•		
MPT 116	•		
MPT 120			•

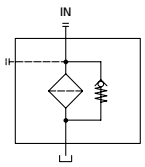

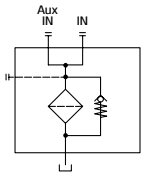

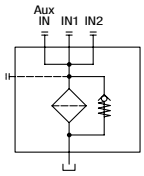

Pressure drop

Filter housings Δp pressure drop

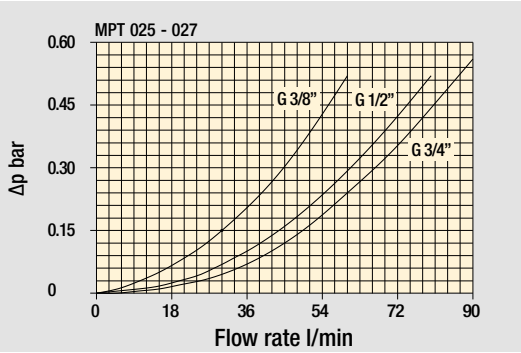

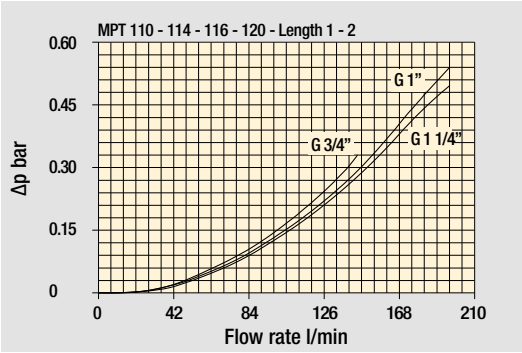

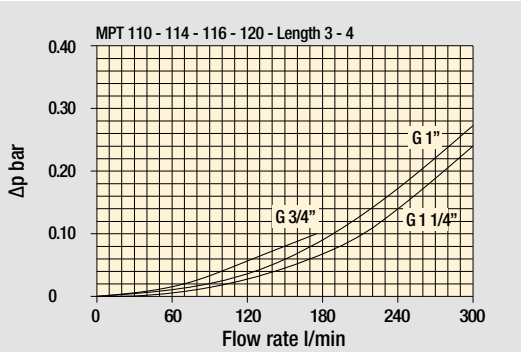

Bypass valve pressure drop

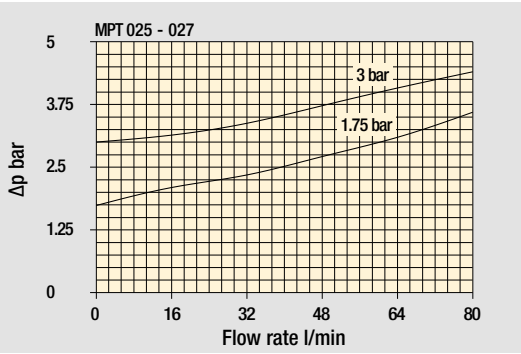

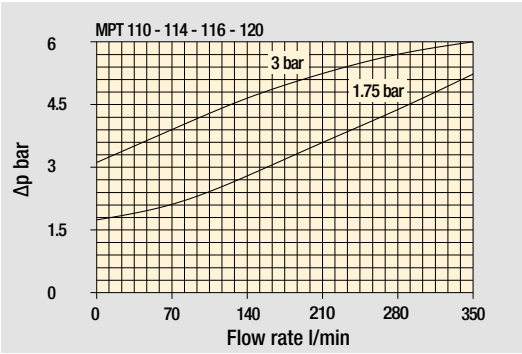

Air breather pressure drop

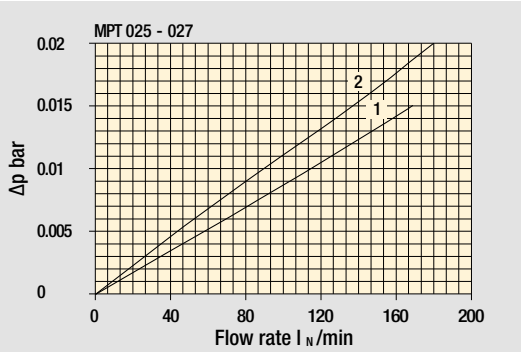

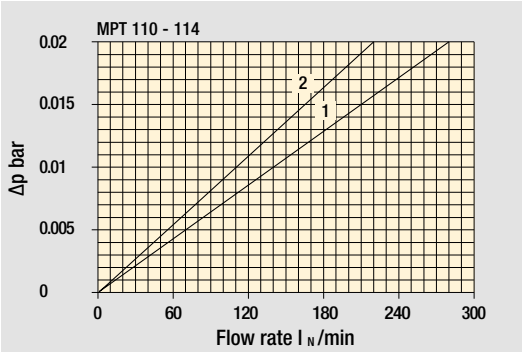

1 C With air breather 10 µm

2 D With anti-splash and SAP50 10 µm

The curves are plotted using mineral oil with density of 0.86 kg/dm³ in compliance with ISO 3968. Δp varies proportionally with density.

Multifunction

MPT 025 -027		
Air breather port plugged Indicator port	Air breather standard Indicator port	Anti-splash air breather & pressurized Double indicator port

Multiport - Multifunction

MPT 110	
Standard - Single IN Port	Double IN Port - Double indicator port
Double IN Port **Option:** double drain port	Double IN Port - Indicator port **Option:** drain port

MPT 120
Triple IN port **Option:** double drain port

Designation & Ordering code

COMPLETE FILTER

Configuration example 1:	MPT025	1	S	A	G3	A10	E	P01
Configuration example 2:	MPT027	3	C	W	G6	A03	B	P01

Series and size

MPT025 | **MPT027** Filter element with standard spigot

Length

1 | **2** | **3** |

Air breather

S	Without air breather
C	With air breather 10 µm
D	With anti-splash and air breather SAP050 10 µm
P	With anti-splash and air breather SAP050 10 µm, pressurization 0.5 bar

Seals and treatments

			Filtration rating Axx	Mxx	Pxx
A	NBR		•	•	•
V	FPM		•	•	•
W	NBR	head anodized	•	•	
Z	FPM	head anodized	•	•	

filter element compatible with fluids HFA-HFB-HFC

Connections

G1	G 3/8”	**G6**	3/4” NPT
G2	G 1/2”	**G7**	SAE 6 - 9/16” - 18 UNF
G3	G 3/4”	**G8**	SAE 8 - 3/4” - 16 UNF
G4	3/8” NPT	**G9**	SAE 12 - 1 1/16” - 12 UN
G5	1/2” NPT		

Filtration rating (filter media)

A03	Inorganic microfiber 3 µm	**M25**	Wire mesh 25 µm
A06	Inorganic microfiber 6 µm	**M60**	Wire mesh 60 µm
A10	Inorganic microfiber 10 µm	**M90**	Wire mesh 90 µm
A16	Inorganic microfiber 16 µm	**P10**	Resin impregnated paper 10 µm
A25	Inorganic microfiber 25 µm	**P25**	Resin impregnated paper 25 µm

Bypass valve

E	3 bar
B	1.75 bar

Execution

P01	MP Filtri standard
Pxx	Customized

FILTER ELEMENT

Configuration example 1:	MF020	1	A10	H	B	E	P01
Configuration example 2:	MF020	3	A03	W	B		P01

Element series and size

MF020 Filter element with standard spigot

Element length

1 | **2** | **3** |

Filtration rating (filter media)

A03	Inorganic microfiber 3 µm	**M25**	Wire mesh 25 µm
A06	Inorganic microfiber 6 µm	**M60**	Wire mesh 60 µm
A10	Inorganic microfiber 10 µm	**M90**	Wire mesh 90 µm
A16	Inorganic microfiber 16 µm	**P10**	Resin impregnated paper 10 µm
A25	Inorganic microfiber 25 µm	**P25**	Resin impregnated paper 25 µm

Element Δp

		Filter media Axx	Mxx	Pxx
N	10 bar		•	•
H	10 bar	•		
W	10 bar, compatible with fluids HFA, HFB and HFC	•	•	

Seals

B	NBR
V	FPM

Bypass valve

E	3 bar
	1.75 bar

Execution

P01	MP Filtri standard
Pxx	Customized

ACCESSORIES

Indicators		page
BVA	Axial pressure gauge	240
BVR	Radial pressure gauge	240
BVP	Visual pressure indicator with automatic reset	241
BVQ	Visual pressure indicator with manual reset	241

		page
BEA	Electrical pressure indicator	239
BEM	Electrical pressure indicator	239
BLA	Electrical / visual pressure indicator	239-240

Additional features		page
TE	Extension tube	248
DPT	Dipstick	249

Dimensions

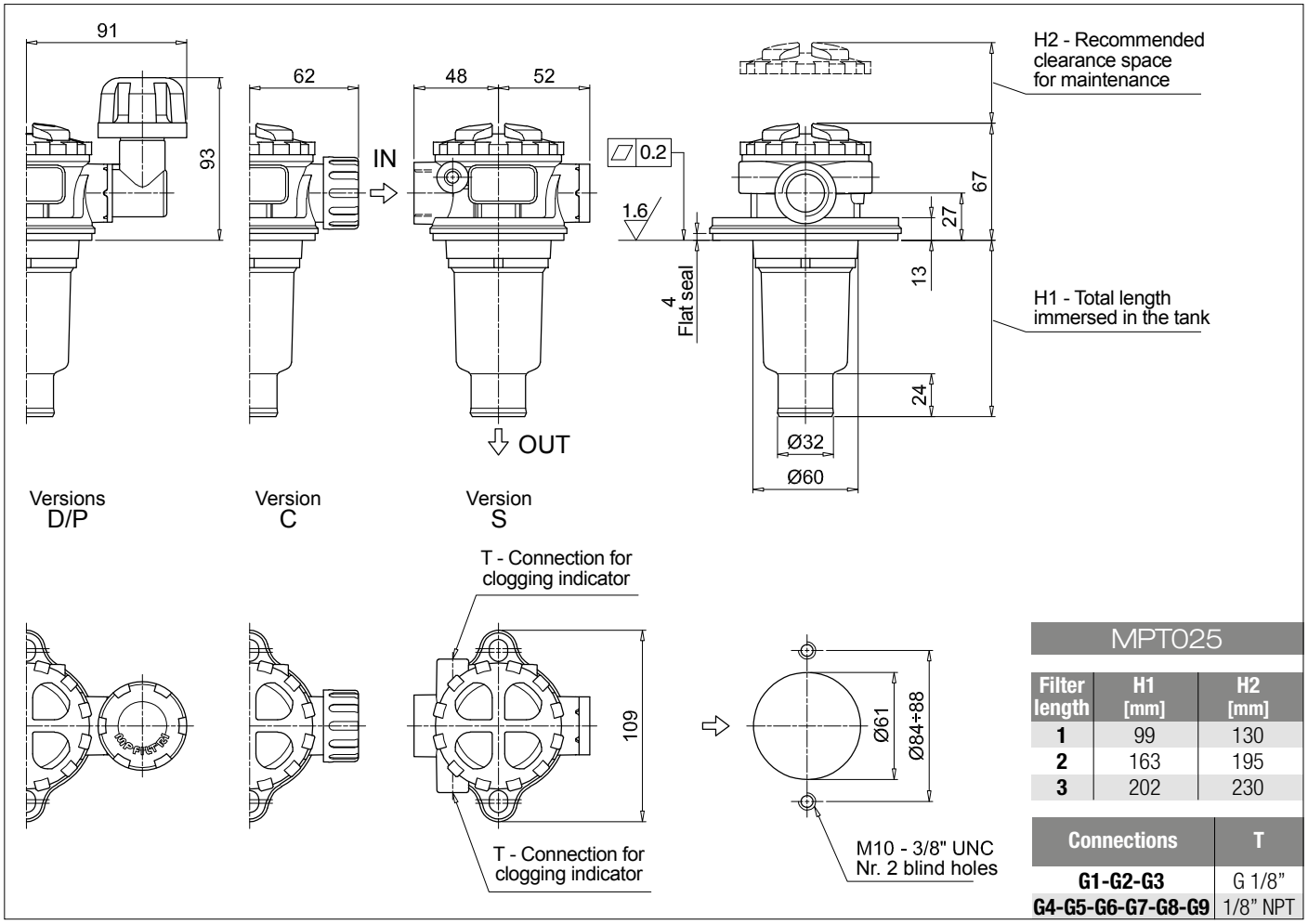

MPT025		
Filter length	**H1 [mm]**	**H2 [mm]**
1	99	130
2	163	195
3	202	230

Connections	**T**
G1-G2-G3	G 1/8”
G4-G5-G6-G7-G8-G9	1/8” NPT

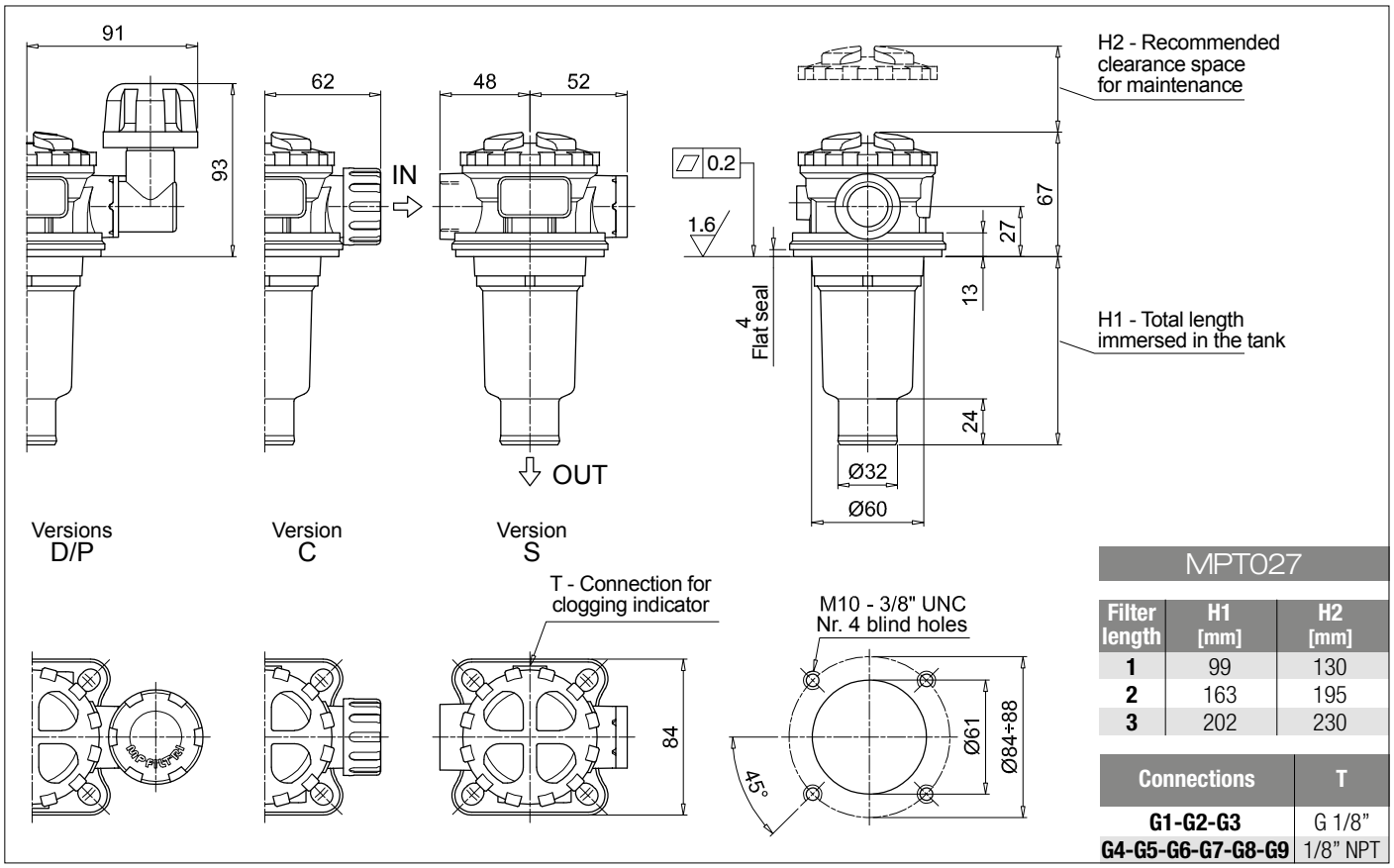

MPT027		
Filter length	**H1 [mm]**	**H2 [mm]**
1	99	130
2	163	195
3	202	230

Connections	**T**
G1-G2-G3	G 1/8”
G4-G5-G6-G7-G8-G9	1/8” NPT

MPT MPT110

Designation & Ordering code

COMPLETE FILTER

Configuration example 1:	MPT110	1	S	A	G1	0	A06	E	P01
Configuration example 2:	MPT110	3	P	V	G4	1	M25	B	P01

Series and size

MPT110 Filter element with standard spigot

Length

1 | **2** | **3** | **4** |

Air breather

- **S** Without air breather
- **C** With air breather 10 µm
- **D** With anti-splash and air breather SAP050 10 µm
- **P** With anti-splash and air breather SAP050 10 µm, pressurization 0.5 bar

Seals and treatments		Filtration rating Axx	Mxx	Pxx
A	NBR	•	•	•
V	FPM	•	•	•
W	NBR head anodized (filter element compatible with fluids HFA-HFB-HFC)	•	•	
Z	FPM head anodized (filter element compatible with fluids HFA-HFB-HFC)	•	•	

Main Connections		Aux size 1	Aux size 2
G1	G 3/4"	G 3/8"	G 1/2"
G2	G 1"		
G3	G 1 1/4"		
G4	3/4" NPT	3/8" NPT	1/2" NPT
G5	1" NPT		

Main Connections		Aux size 2	Aux size 2
G6	1 1/4" NPT	3/8" NPT	1/2" NPT
G7	SAE 12 - 1 1/16" - 12 UN	SAE 6 - 9/16" - 18 UNF	SAE 8 - 3/4" - 16 UNF
G8	SAE 16 - 1 5/16" - 12 UN		
G9	SAE 20 - 1 5/8" - 12 UN		

Aux connection - see previous table

- **0** Not machined
- **1** Aux size 1
- **2** Aux size 2

Filtration rating (filter media)

- **A03** Inorganic microfiber 3 µm
- **A06** Inorganic microfiber 6 µm
- **A10** Inorganic microfiber 10 µm
- **A16** Inorganic microfiber 16 µm
- **A25** Inorganic microfiber 25 µm
- **M25** Wire mesh 25 µm
- **M60** Wire mesh 60 µm
- **M90** Wire mesh 90 µm
- **P10** Resin impregnated paper 10 µm
- **P25** Resin impregnated paper 25 µm

Bypass valve

- **E** 3 bar
- **B** 1.75 bar

Execution

- **P01** MP Filtri standard
- **Pxx** Customized

FILTER ELEMENT

Configuration example 1:	MF100	1	A06	H	B	E	P01
Configuration example 2:	MF100	3	M25	N	V		P01

Element series and size

MF100 Filter element with standard spigot

Element length

1 | **2** | **3** | **4** |

Filtration rating (filter media)

- **A03** Inorganic microfiber 3 µm
- **A06** Inorganic microfiber 6 µm
- **A10** Inorganic microfiber 10 µm
- **A16** Inorganic microfiber 16 µm
- **A25** Inorganic microfiber 25 µm
- **M25** Wire mesh 25 µm
- **M60** Wire mesh 60 µm
- **M90** Wire mesh 90 µm
- **P10** Resin impregnated paper 10 µm
- **P25** Resin impregnated paper 25 µm

Element Δp		Filter media Axx	Mxx	Pxx
N	10 bar		•	•
H	10 bar	•		
W	10 bar, compatible with fluids HFA, HFB and HFC	•	•	

Seals

- **B** NBR
- **V** FPM

Bypass valve

- **E** 3 bar
- 1.75 bar

Execution

- **P01** MP Filtri standard
- **Pxx** Customized

ACCESSORIES

Indicators		page
BVA	Axial pressure gauge	240
BVR	Radial pressure gauge	240
BVP	Visual pressure indicator with automatic reset	241
BVQ	Visual pressure indicator with manual reset	241
BEA	Electrical pressure indicator	239
BEM	Electrical pressure indicator	239
BLA	Electrical / visual pressure indicator	239-240

Additional features		page
TE	Extension tube	248
DFS	Diffuser with fast lock connection	249
DPT	Dipstick	249

MPT110				
Filter length	H1 [mm]	H2 [mm]	D [mm]	l [mm]
1	97	120	38	4
2	144	170	38	4
3	222	250	47	-
4	324	350	47	2.5

Connections	T
G1-G2-G3	G 1/8”
G4-G5-G6-G7-G8-G9	1/8” NPT

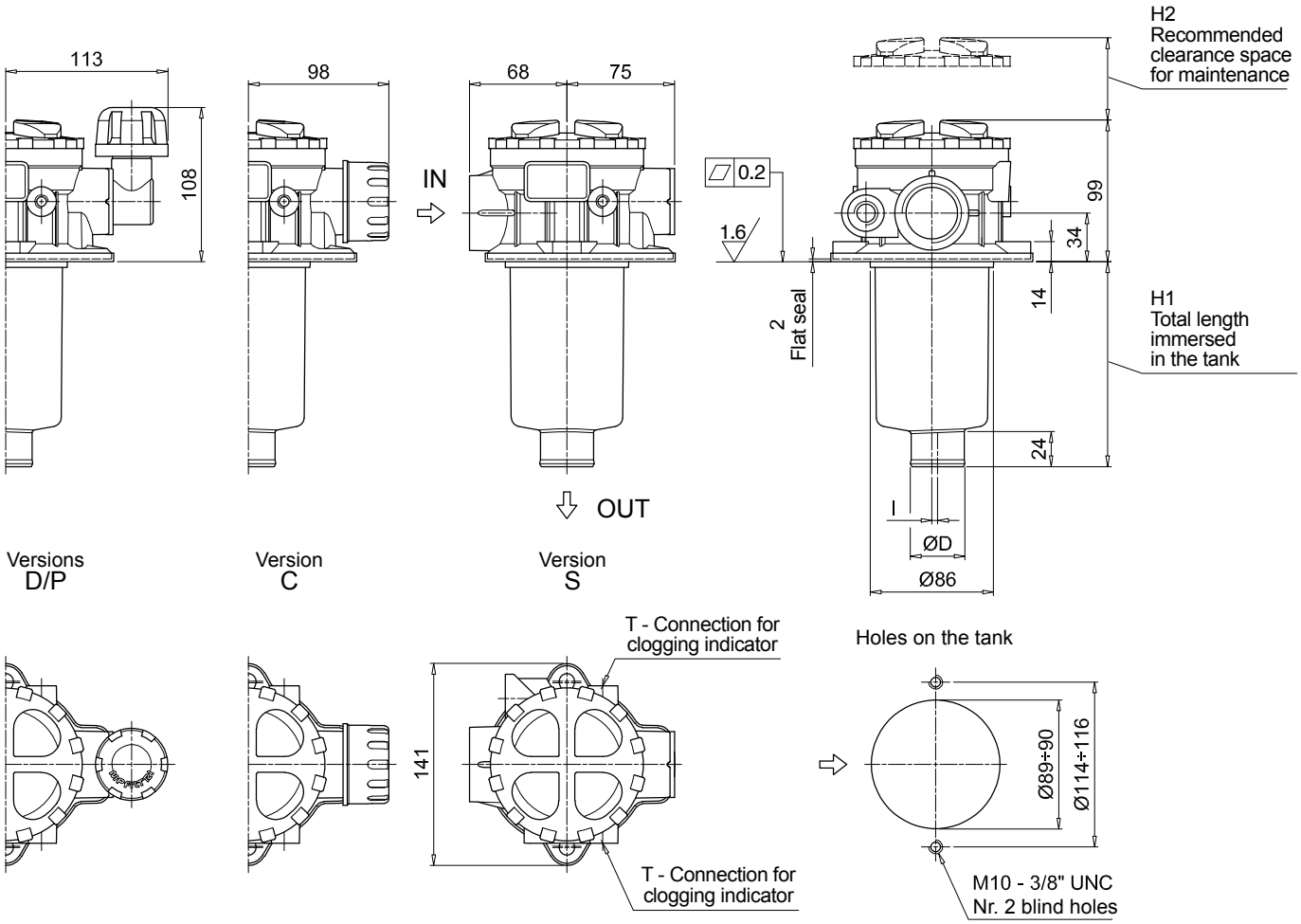

MPT MPT114

Designation & Ordering code

COMPLETE FILTER

Configuration example 1:	MPT114	4	S	A	G3	A10	E	P01
Configuration example 2:	MPT114	3	C	W	G6	A03	B	P01

Series and size

MPT114 Filter element with standard spigot

Length

1 | **2** | **3** | **4** |

Air breather

- **S** Without air breather
- **C** With air breather 10 µm
- **D** With anti-splash and air breather SAP050 10 µm
- **P** With anti-splash and air breather SAP050 10 µm pressurization 0.5 bar

Seals and treatments

		Filtration rating Axx	Mxx	Pxx
A	NBR	•	•	•
V	FPM	•	•	•
W	NBR head anodized (filter element compatible with fluids HFA-HFB-HFC)	•	•	
Z	FPM head anodized (filter element compatible with fluids HFA-HFB-HFC)	•	•	

Connections

G1	G 3/4”	**G6**	1 1/4” NPT
G2	G 1”	**G7**	SAE 12 - 1 1/16” - 12 UN
G3	G 1 1/4”	**G8**	SAE 16 - 1 5/16” - 12 UN
G4	3/4” NPT	**G9**	SAE 20 - 1 5/8” - 12 UN
G5	1” NPT		

Filtration rating (filter media)

A03	Inorganic microfiber 3 µm	**M25**	Wire mesh 25 µm
A06	Inorganic microfiber 6 µm	**M60**	Wire mesh 60 µm
A10	Inorganic microfiber 10 µm	**M90**	Wire mesh 90 µm
A16	Inorganic microfiber 16 µm	**P10**	Resin impregnated paper 10 µm
A25	Inorganic microfiber 25 µm	**P25**	Resin impregnated paper 25 µm

Bypass valve

- **E** 3 bar
- **B** 1.75 bar

Execution

- **P01** MP Filtri standard
- **Pxx** Customized

FILTER ELEMENT

Configuration example 2:	MF100	4	A10	H	B	E	P01
Configuration example 1:	MF100	3	A03	W	B		P01

Element series and size

MF100 Filter element with standard spigot

Element length

1 | **2** | **3** | **4** |

Filtration rating (filter media)

A03	Inorganic microfiber 3 µm	**M25**	Wire mesh 25 µm
A06	Inorganic microfiber 6 µm	**M60**	Wire mesh 60 µm
A10	Inorganic microfiber 10 µm	**M90**	Wire mesh 90 µm
A16	Inorganic microfiber 16 µm	**P10**	Resin impregnated paper 10 µm
A25	Inorganic microfiber 25 µm	**P25**	Resin impregnated paper 25 µm

Element Δp

		Filter media Axx	Mxx	Pxx
N	10 bar		•	•
H	10 bar	•		
W	10 bar, compatible with fluids HFA, HFB and HFC	•	•	

Seals

- **B** NBR
- **V** FPM

Bypass valve

- **E** 3 bar
- 1.75 bar

Execution

- **P01** MP Filtri standard
- **Pxx** Customized

ACCESSORIES

Indicators		page
BVA	Axial pressure gauge	240
BVR	Radial pressure gauge	240
BVP	Visual pressure indicator with automatic reset	241
BVQ	Visual pressure indicator with manual reset	241
BEA	Electrical pressure indicator	239
BEM	Electrical pressure indicator	239
BLA	Electrical / visual pressure indicator	239-240

Additional features		page
TE	Extension tube	248
DFS	Diffuser with fast lock connection	249
DPT	Dipstick	249

MPT114				
Filter length	H1 [mm]	H2 [mm]	D [mm]	l [mm]
1	97	120	38	4
2	144	170	38	4
3	222	250	47	-
4	324	350	47	2.5

Connections	T
G1-G2-G3	G 1/8”
G4-G5-G6-G7-G8-G9	1/8” NPT

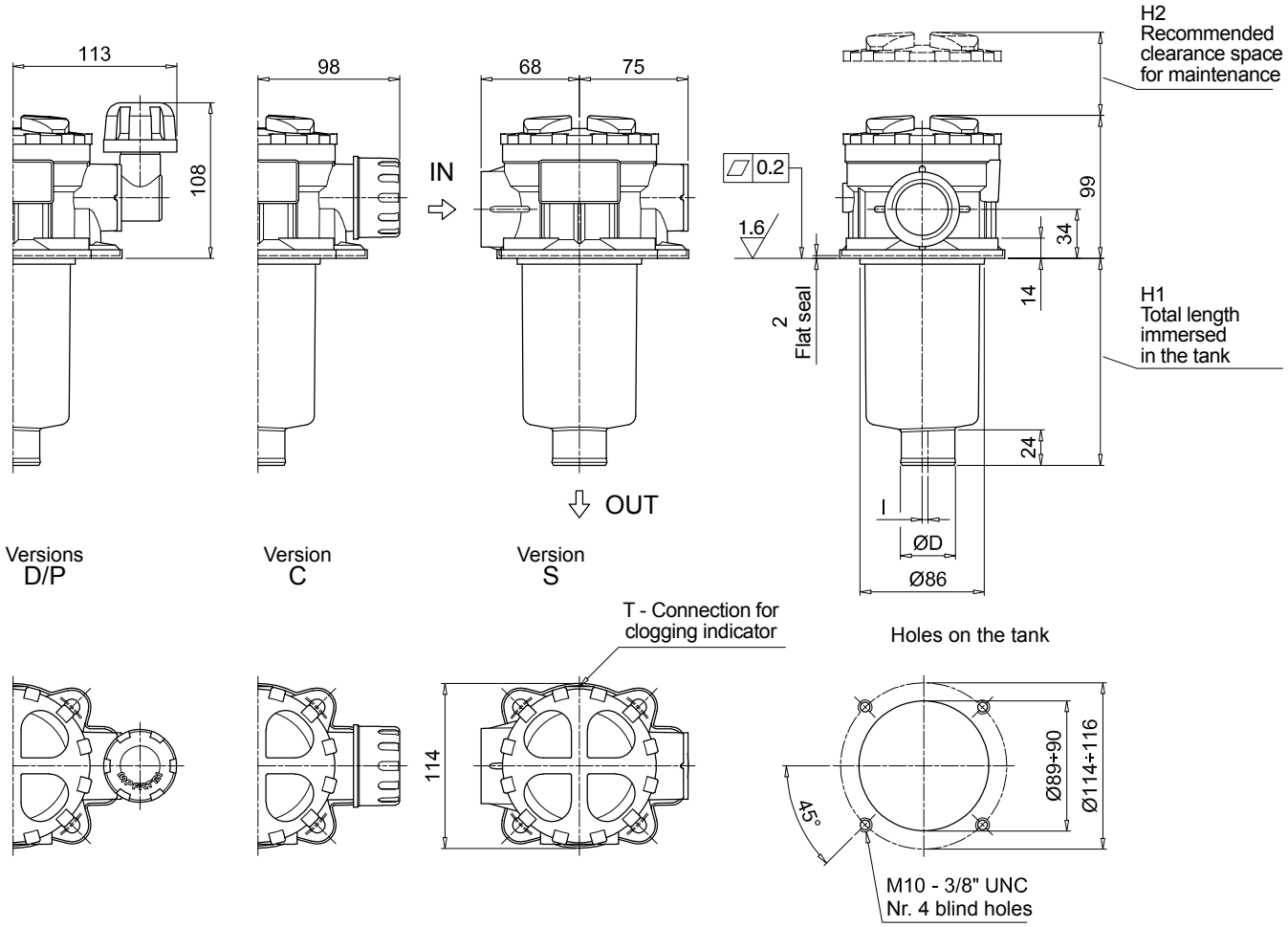

MPT MPT116

Designation & Ordering code

COMPLETE FILTER

Configuration example 1:	MPT116	1	S	A	G1	M90	E	P01
Configuration example 2:	MPT116	2	S	Z	G9	A03	B	P01

Series and size

MPT116 Filter element with standard spigot

Length

1 | **2** | **3** | **4** |

Air breather

S Without air breather

Seals and treatments

		Filtration rating Axx	Mxx	Pxx
A	NBR	•	•	•
V	FPM	•	•	•
W	NBR head anodized (filter element compatible with fluids HFA-HFB-HFC)	•	•	
Z	FPM head anodized (filter element compatible with fluids HFA-HFB-HFC)	•	•	

Flat seal on the head on request

Connections

G1	G 3/4”	**G6**	1 1/4” NPT
G2	G 1”	**G7**	SAE 12 - 1 1/16” - 12 UN
G3	G 1 1/4”	**G8**	SAE 16 - 1 5/16” - 12 UN
G4	3/4” NPT	**G9**	SAE 20 - 1 5/8” - 12 UN
G5	1” NPT		

Filtration rating (filter media)

A03	Inorganic microfiber 3 µm	**M25**	Wire mesh 25 µm
A06	Inorganic microfiber 6 µm	**M60**	Wire mesh 60 µm
A10	Inorganic microfiber 10 µm	**M90**	Wire mesh 90 µm
A16	Inorganic microfiber 16 µm	**P10**	Resin impregnated paper 10 µm
A25	Inorganic microfiber 25 µm	**P25**	Resin impregnated paper 25 µm

Bypass valve

E	3 bar
B	1.75 bar

Execution

P01	MP Filtri standard
Pxx	Customized

FILTER ELEMENT

Configuration example 2:	MF100	1	M90	N	B	E	P01
Configuration example 1:	MF100	2	A03	W	V		P01

Element series and size

MF100 Filter element with standard spigot

Element length

1 | **2** | **3** | **4** |

Filtration rating (filter media)

A03	Inorganic microfiber 3 µm	**M25**	Wire mesh 25 µm
A06	Inorganic microfiber 6 µm	**M60**	Wire mesh 60 µm
A10	Inorganic microfiber 10 µm	**M90**	Wire mesh 90 µm
A16	Inorganic microfiber 16 µm	**P10**	Resin impregnated paper 10 µm
A25	Inorganic microfiber 25 µm	**P25**	Resin impregnated paper 25 µm

Element Δp

		Filter media Axx	Mxx	Pxx
N	10 bar		•	•
H	10 bar	•		
W	10 bar, compatible with fluids HFA, HFB and HFC	•	•	

Seals

B	NBR
V	FPM

Bypass valve

E	3 bar
	1.75 bar

Execution

P01	MP Filtri standard
Pxx	Customized

ACCESSORIES

Indicators		page
BVA	Axial pressure gauge	240
BVR	Radial pressure gauge	240
BVP	Visual pressure indicator with automatic reset	241
BVQ	Visual pressure indicator with manual reset	241
BEA	Electrical pressure indicator	239
BEM	Electrical pressure indicator	239
BLA	Electrical / visual pressure indicator	239-240

Additional features		page
TE	Extension tube	248
DFS	Diffuser with fast lock connection	249
DPT	Dipstick	249

MPT116				
Filter length	H1 [mm]	H2 [mm]	D [mm]	l [mm]
1	99	120	38	4
2	146	170	38	4
3	224	250	47	-
4	326	350	47	2.5

Connections	T
G1-G2-G3	G 1/8”
G4-G5-G6-G7-G8-G9	1/8” NPT

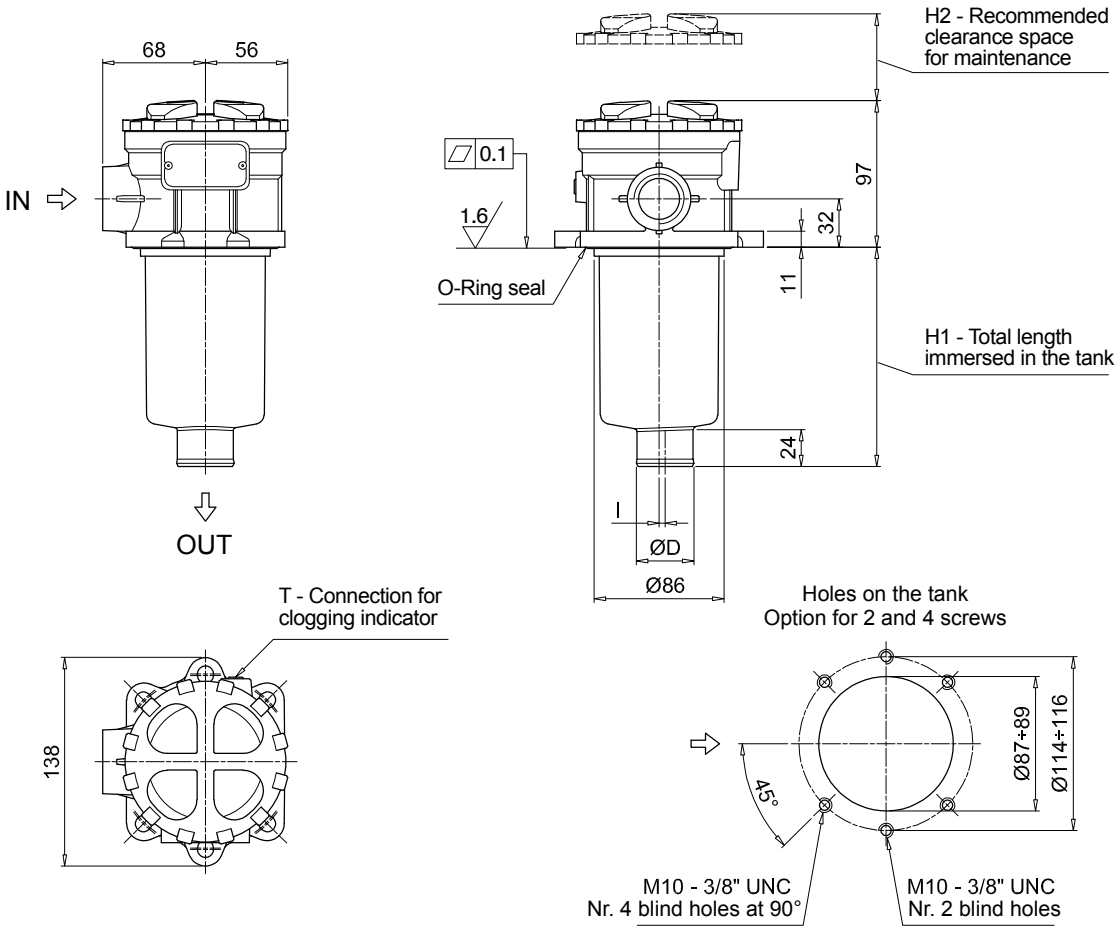

MPT MPT120

Designation & Ordering code

COMPLETE FILTER

Configuration example 1:	MPT120	1	A	G1	0	A06	E	P01
Configuration example 2:	MPT120	3	V	G4	1	M25	B	P01

Series and size

MPT120 Filter element with standard spigot

Length

1 | **2** | **3** | **4** |

Seals and treatments

		Filtration rating Axx	Mxx	Pxx
A	NBR	•	•	•
V	FPM	•	•	•
W	NBR head anodized (filter element compatible with fluids HFA-HFB-HFC)	•	•	
Z	FPM head anodized (filter element compatible with fluids HFA-HFB-HFC)	•	•	

Main Connections	Rear connections	Aux size 1	Aux size 2
G1 G 3/4"	G 3/4"	G 3/8"	G 1/2"
G2 G 1"	G 1"		
G3 G 1 1/4"	G 3/4"		
G4 3/4" NPT	3/4" NPT	3/8" NPT	1/2" NPT
G5 1" NPT	1" NPT		
G6 1 1/4" NPT	3/4" NPT		
G7 SAE 12 - 1 1/16" - 12 UN	SAE 12 - 1 1/16" - 12 UN	SAE 6 - 9/16" - 18 UNF	SAE 8 - 3/4" - 16 UNF
G8 SAE 16 - 1 5/16" - 12 UN	SAE 16 - 1 5/16" - 12 UN		
G9 SAE 20 - 1 5/8" - 12 UN	SAE 12 - 1 1/16" - 12 UN		

Aux connection - see previous table

0 Not machined **1** Aux size 1 **2** Aux size 2

Filtration rating (filter media)

A03	Inorganic microfiber 3 µm	**M25**	Wire mesh 25 µm
A06	Inorganic microfiber 6 µm	**M60**	Wire mesh 60 µm
A10	Inorganic microfiber 10 µm	**M90**	Wire mesh 90 µm
A16	Inorganic microfiber 16 µm	**P10**	Resin impregnated paper 10 µm
A25	Inorganic microfiber 25 µm	**P25**	Resin impregnated paper 25 µm

Bypass valve

E 3 bar
B 1.75 bar

Execution

P01 MP Filtri standard
Pxx Customized

FILTER ELEMENT

Configuration example 1:	MF100	1	A06	H	B	E	P01
Configuration example 2:	MF100	3	M25	N	V		P01

Element series and size

MF100 Filter element with standard spigot

Element length

1 | **2** | **3** | **4** |

Filtration rating (filter media)

A03	Inorganic microfiber 3 µm	**M25**	Wire mesh 25 µm
A06	Inorganic microfiber 6 µm	**M60**	Wire mesh 60 µm
A10	Inorganic microfiber 10 µm	**M90**	Wire mesh 90 µm
A16	Inorganic microfiber 16 µm	**P10**	Resin impregnated paper 10 µm
A25	Inorganic microfiber 25 µm	**P25**	Resin impregnated paper 25 µm

Element Δp

		Filter media Axx	Mxx	Pxx
N	10 bar		•	•
H	10 bar	•		
W	10 bar, compatible with fluids HFA, HFB and HFC	•	•	

Seals

B NBR
V FPM

Bypass valve

E 3 bar
1.75 bar

Execution

P01 MP Filtri standard
Pxx Customized

ACCESSORIES

Indicators		page
BVA	Axial pressure gauge	240
BVR	Radial pressure gauge	240
BVP	Visual pressure indicator with automatic reset	241
BVQ	Visual pressure indicator with manual reset	241
BEA	Electrical pressure indicator	239
BEM	Electrical pressure indicator	239
BLA	Electrical / visual pressure indicator	239-240

Additional features		page
TE	Extension tube	248
DFS	Diffuser with fast lock connection	249
DPT	Dipstick	249

MPT120				
Filter length	H1 [mm]	H2 [mm]	D [mm]	l [mm]
1	97	120	38	4
2	147	170	38	4
3	222	250	47	-
4	324	350	47	2.5

Connections	T
G1-G2-G3	G 1/8”
G4-G5-G6-G7-G8-G9	1/8” NPT

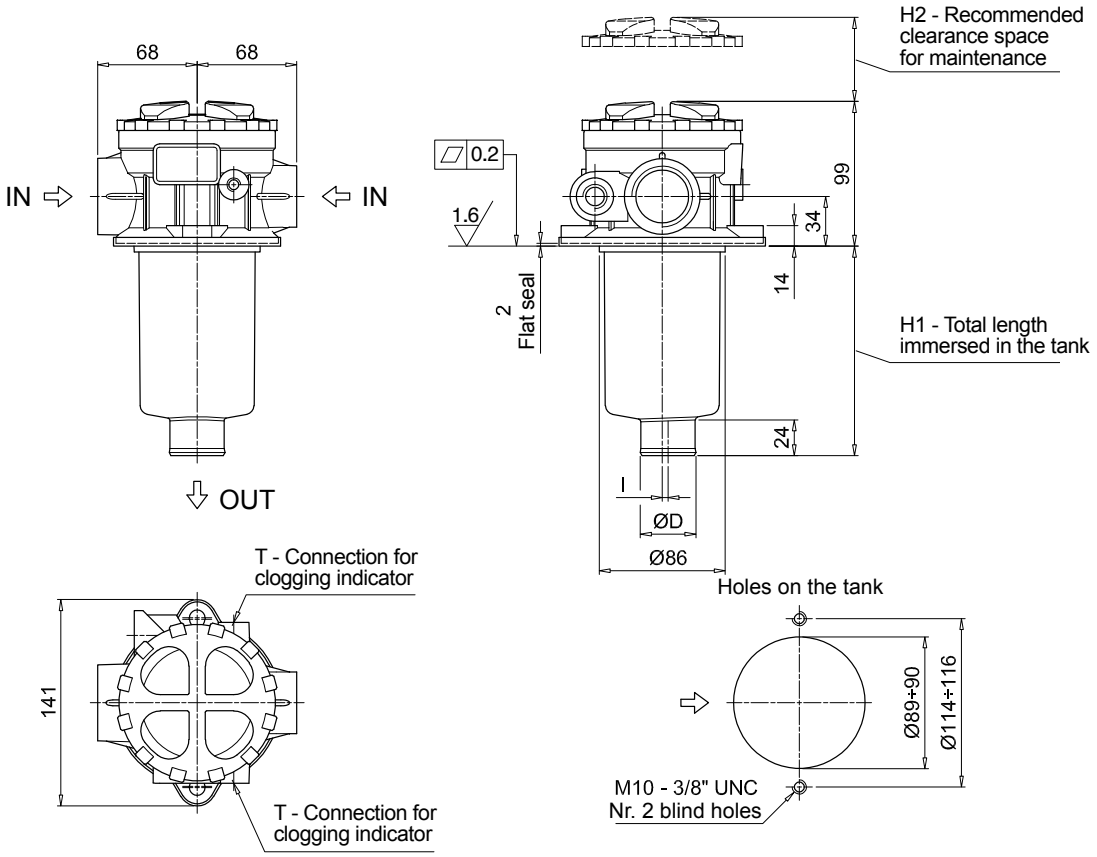

Order number for spare parts

MPT 025 - 027 - 110

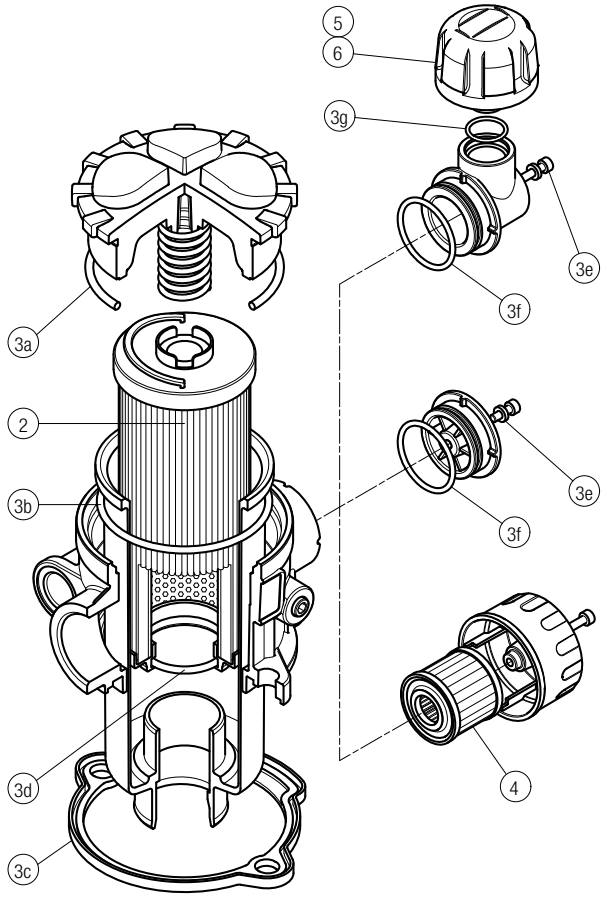

Item:	Q.ty: 1 pc. 2	Q.ty: 1 pc. 3 (3a ÷ 3g)		Q.ty: 1 pc. 4	Q.ty: 1 pc. 5	Q.ty: 1 pc. 6
Filter series	**Filter element**	**Seal Kit code number NBR**	**FPM**	**C**	**D**	**P**
MPT 025	See order table	02050557	02050558	10 µm A3L03	10 µm SAP50G3L03A0P01	10 µm SAP50G3L03A1P01
MPT 027		02050559	02050560	10 µm A3L03	10 µm SAP50G3L03A0P01	10 µm SAP50G3L03A1P01
MPT 110		02050561	02050562	10 µm A5L03	10 µm SAP50G3L03A0P01	10 µm SAP50G3L03A1P01

MPT 116

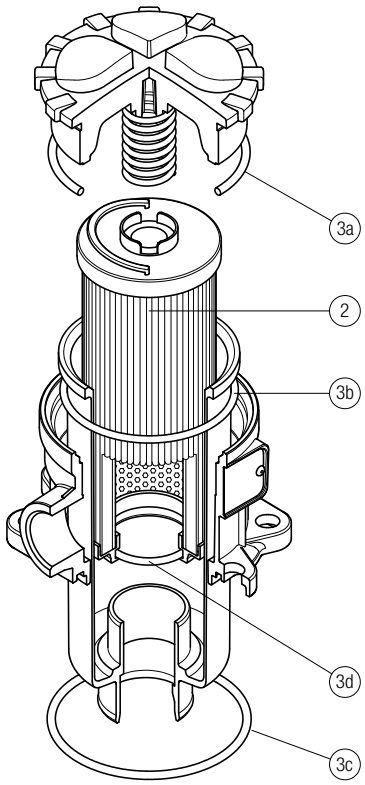

Item:	Q.ty: 1 pc. 2	Q.ty: 1 pc. 3 (3a ÷ 3d)	
Filter series	**Filter element**	**Seal Kit code number NBR**	**FPM**
MPT 116	See order table	02050466	02050467

Order number for spare parts

MPT 114

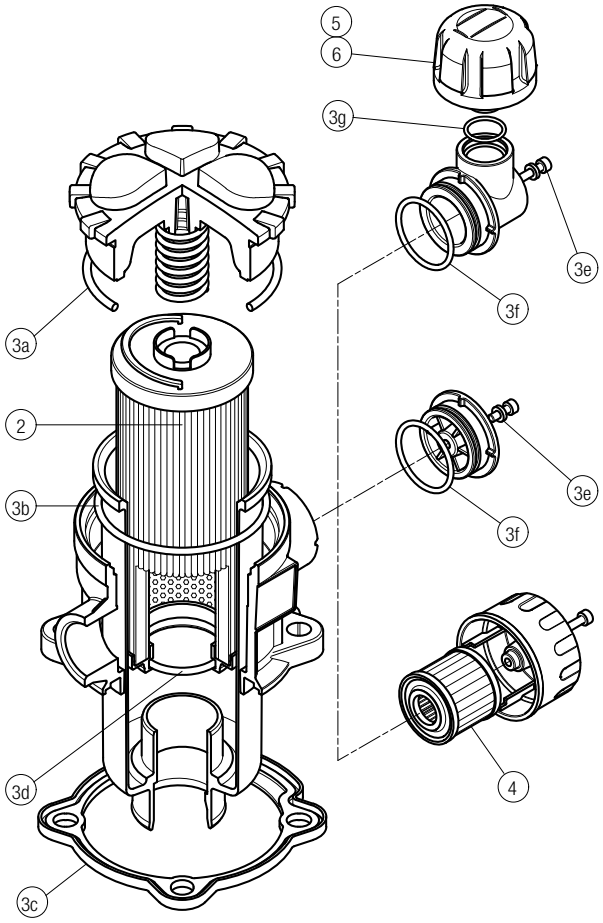

Item:	Q.ty: 1 pc. 2	Q.ty: 1 pc. 3 (3a ÷ 3g)		Q.ty: 1 pc. 4	Q.ty: 1 pc. 5	Q.ty: 1 pc. 6
Filter series	Filter element	Seal Kit code number NBR	FPM	Air breather filter element - version: C	D	P
MPT 114	See order table	02050580	02050581	10 µm A5L03	10 µm SAP50G3L03A0P01	10 µm SAP50G3L03A1P01

MPT 120

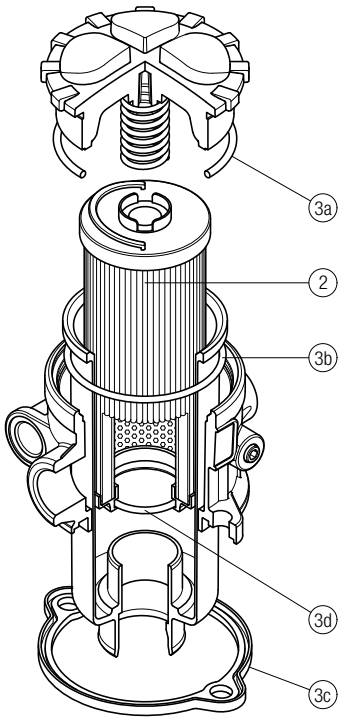

Item:	Q.ty: 1 pc. 2	Q.ty: 1 pc. 3 (3a ÷ 3d)	
Filter series	Filter element	Seal Kit code number NBR	FPM
MPT 120	See order table	02050563	02050564

MFB series
BOWL ASSEMBLY

Maximum working pressure up to 800 kPa (8 bar) - Flow rate up to 700 l/min

MFB GENERAL INFORMATION

Description

Return filter | Bowl assembly

Maximum working pressure up to 800 kPa (8 bar)
Flow rate up to 700 l/min

MFB is a range of return filter kits for protection of the reservoir against the system contamination.
They are directly integrated in the moulded reservoir in immersed or semi-immersed position to save space into the tank.
Treaded or flanged covers can be provided.
The filter output must be always immersed into the fluid to avoid aeration or foam generation into the reservoir.

Available features:
- Fine filtration rating, to get a good cleanliness level into the reservoir
- Bypass valve integrated into the filter element, to relieve excessive pressure drop across the filter media
- Extension tube, to be used in deep reservoirs (sold as separate item)
- Diffuser, to reduce the risk of aeration, foaming and noise (sold as separate item)

Common applications:
Mobile machines

Technical data

Bowl assembly materials
- Cover
  Nylon: MFB 020-030-100
  Aluminium: MFB 180-190

- Bowl: Nylon

Filter element materials
- Caps: Nylon
- Spring: Spring steel

Bypass valve
- Opening pressure 175 kPa (1.75 bar) ±10%
- Opening pressure 300 kPa (3 bar) ±10%

Δp element type
- Microfibre filter elements - series H: 10 bar
- Fluid flow through the filter element from OUT to IN

Seals
- Standard NBR series A
- Optional FPM series V

Temperature
From -25 °C to +110 °C

Note
MFB filters are provided for vertical mounting

Weights [kg] and volumes [dm³]

Filter series	Weights [kg]					Volumes [dm³]				
	Length	1	2	3	4	Length	1	2	3	4
MFB 020		0.25	0.35	0.40	-		0.10	0.15	0.20	-
MFB 030		0.25	-	-	-		0.15	-	-	-
MFB 100		0.50	0.60	0.75	0.95		0.35	0.50	0.80	1.10
MFB 180		1.60	2.40	-	-		1.50	2.90	-	-
MFB 190		-	2.40	-	-		-	3.00	-	-

FILTER ASSEMBLY SIZING
Flow rates [l/min]

		Filter element design - H series					Filter element design - N series		
Filter series	Length	A03	A06	A10	A16	A25	M25 M60 M90	P10	P25
MFB 020	**1**	7	10	23	28	42	59	51	54
	2	17	20	45	48	56	72	64	67
	3	21	24	50	55	59	76	74	75
MFB 030	**1**	7	10	24	29	47	84	60	66
MFB 100	**1**	18	20	53	56	65	153	87	96
	2	28	38	65	75	95	158	111	123
	3	48	55	125	135	169	289	224	251
	4	79	89	180	185	198	306	264	289
MFB 180	**1**	127	148	235	243	278	441	285	299
	2	231	262	358	382	388	472	404	412
MFB 190	**2**	261	305	489	528	546	696	583	598

Maximum flow rate for a complete return filter with a pressure drop Δp = 0.5 bar.
The reference fluid has a kinematic viscosity of 30 mm^2/s (cSt) and a density of 0.86 kg/dm^3.
For different pressure drop or fluid viscosity we recommend to use our selection software available on www.mpfiltri.com.
You can also calculate the right size using the formulas present on the FILTER SIZING paragraph at the beginning of the full catalogue or at the beginning of the filter family brochure.
Please, contact our Sales Department for further additional information.

Hydraulic symbols

Filter series	Style 1 connection
MFB 020	•
MFB 030	•
MFB 100	•
MFB 180	•
MFB 190	•

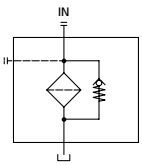

Designation & Ordering code

COMPLETE FILTER

Configuration example 1:	MFB100	1	A	2	A10	H	E	P01
Configuration example 2:	MFB180	2	V	1	M25	N	B	P01

Series and size

MFB020 | **MFB030** | **MFB100** | **MFB180** | **MFB190**

Filter element with private spigot

Length	MFB020	MFB030	MFB100	MFB180	MFB190
1	•	•	•	•	
2	•		•	•	•
3	•		•		
4			•		

Seals

A NBR
V FPM

Version	MFB020	MFB030	MFB100	MFB180	MFB190
1 Without cover	•	•	•	•	•
2 With flanged cover type MPF		•	•	•	•
3 With threaded cover type MPT	•		•		

Filtration rating (filter media)

A03	Inorganic microfiber 3 µm	**M25**	Wire mesh 25 µm
A06	Inorganic microfiber 6 µm	**M60**	Wire mesh 60 µm
A10	Inorganic microfiber 10 µm	**M90**	Wire mesh 90 µm
A16	Inorganic microfiber 16 µm	**P10**	Resin impregnated paper 10 µm
A25	Inorganic microfiber 25 µm	**P25**	Resin impregnated paper 25 µm

Element Δp	Filter media Axx	Mxx	Pxx
N 10 bar		•	•
H 10 bar	•		
W 10 bar, compatible with fluids HFA, HFB and HFC	•	•	

Bypass valve

E 3 bar
B 1.75 bar

Execution

P01 MP Filtri standard
Pxx Customized

FILTER ELEMENT

Configuration example 1:	MF100	1	A10	H	B	E	P01
Configuration example 2:	MF180	2	M25	N	V		P01

Element series and size

MF020 | **MF030** | **MF100** | **MF180** | **MF190**

Filter element with private spigot

Element length	MF020	MF030	MF100	MF180	MF190
1	•	•	•	•	
2	•		•	•	•
3	•		•		
4			•		

Filtration rating (filter media)

A03	Inorganic microfiber 3 µm	**M25**	Wire mesh 25 µm
A06	Inorganic microfiber 6 µm	**M60**	Wire mesh 60 µm
A10	Inorganic microfiber 10 µm	**M90**	Wire mesh 90 µm
A16	Inorganic microfiber 16 µm	**P10**	Resin impregnated paper 10 µm
A25	Inorganic microfiber 25 µm	**P25**	Resin impregnated paper 25 µm

Element Δp	Filter media Axx	Mxx	Pxx
N 10 bar		•	•
H 10 bar	•		

Seals

B NBR
V FPM

Bypass valve

E 3 bar
1.75 bar

Execution

P01 MP Filtri standard
Pxx Customized

ACCESSORIES

Additional features	MFB020	MFB030	MFB100	MFB180	MFB190	page
TE Extension tube	•	•	•	•	•	248
DFS Diffuser with fast lock connection			•			249

MFB

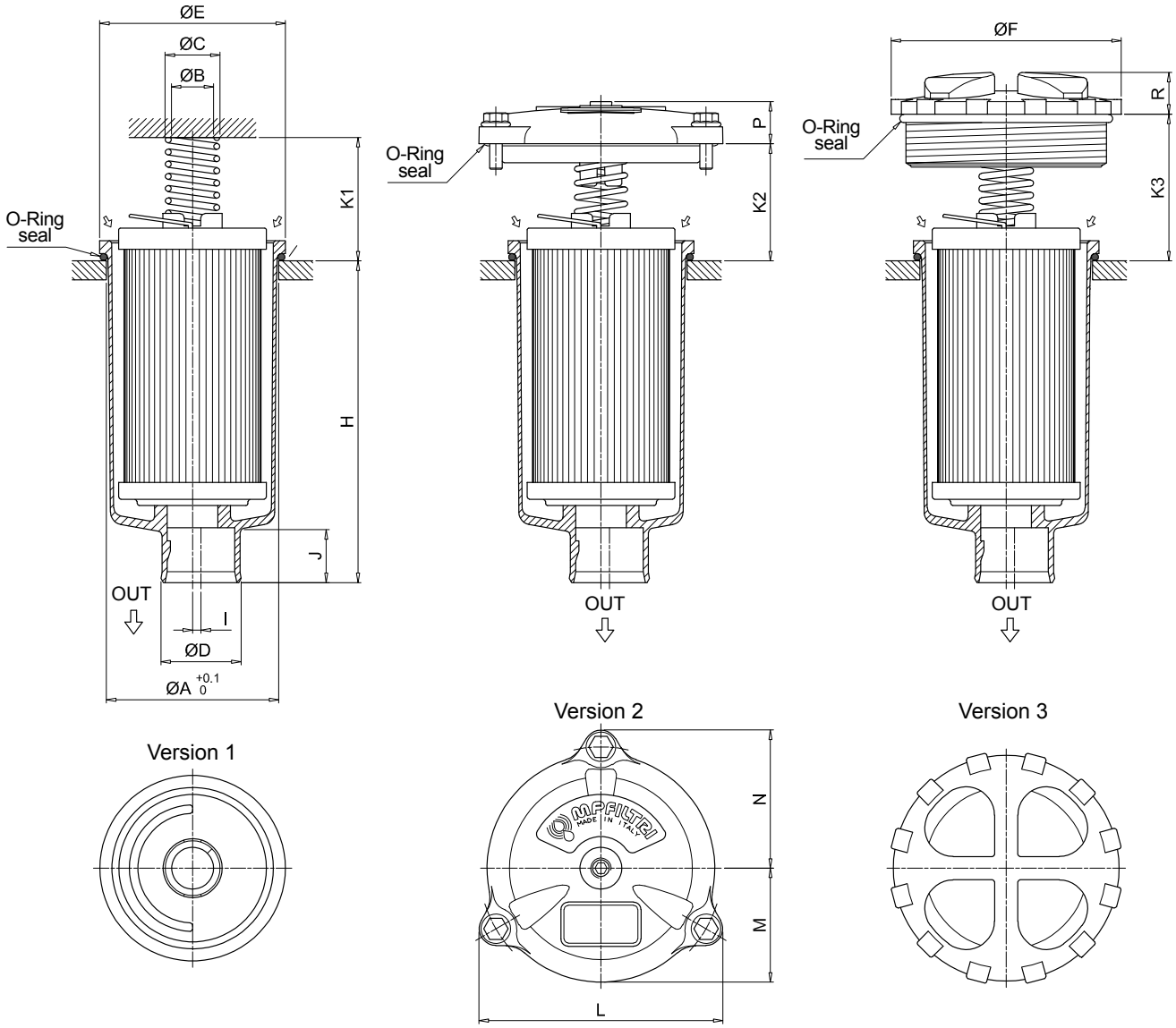

Filter size	Filter Length	ø A [mm]	ø B [mm]	ø C [mm]	ø D [mm]	ø E [mm]	ø F [mm]	H [mm]	I [mm]	J [mm]	K1 [mm]	K2 [mm]	K3 [mm]	L [mm]	M [mm]	N [mm]	P [mm]	R [mm]
020	1	52	20.5	26	32	56	75	111	0	24	42	-	36	-	-	-	-	18
	2	52	20.5	26	32	56	75	175	0	24	42	-	36	-	-	-	-	18
	3	52	20.5	26	32	56	75	214	0	24	42	-	36	-	-	-	-	18
030	1	60.5	20	25.5	32	68	-	92	3	21	33	35	-	92	42	52	18	-
100	1	80.5	20	26	38	88	111	107	4	24	58	55	69	116	54	66	20	20
	2	80.5	20	26	38	88	111	154	4	24	58	55	69	116	54	66	20	20
	3	80.5	20	26	47	88	111	232	0	24	58	55	69	116	54	66	20	20
	4	80.5	20	26	47	88	111	334	2.5	24	58	55	69	116	54	66	20	20
180	1	112.5	26	33.5	47	121	-	234	0	31	58	58	69	159	76	95	21	-
	2	112.5	26	33.5	47	121	-	447	0	31	58	58	69	159	76	95	21	-
190	2	112.5	26	33.5	50	121	-	454	0	38	58	58	69	159	76	95	21	-

Order number for spare parts

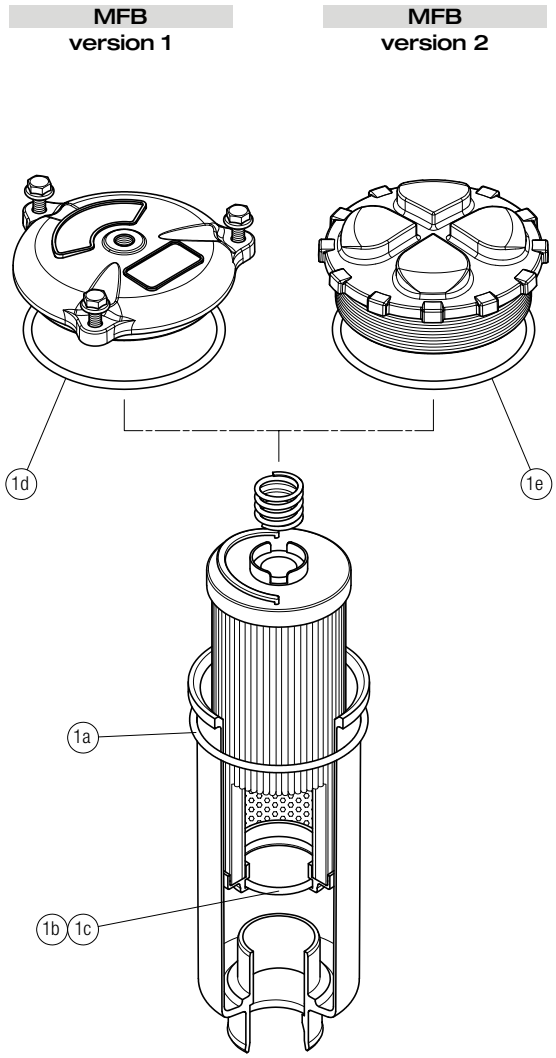

Item:	Q.ty: 1 pc. 1 (1a ÷ 1e)	
Filter series	Seal Kit code number NBR	FPM
MFB 020	02050572	02050573
MFB 030	02050574	02050575
MFB 100	02050555	02050556
MFB 180	02050576	02050577
MFB 190	02050578	02050579

MPH series

Maximum working pressure up to 1 MPa (10 bar) - Flow rate up to 3500 l/min

MPH GENERAL INFORMATION

Description

Return filter

Maximum working pressure up to 1 MPa (10 bar)
Flow rate up to 3500 l/min

MPH is a range of return filters for protection of the reservoir against the system contamination.
They are directly fixed to the reservoir, in immersed or semi-immersed position.
The use of the diffuser is recommended, to place the filter output always immersed into the fluid to avoid aeration or foam generation into the reservoir.
The filtration from inside to outside allows a cleaner filter element replacement, the dirty remains into the filter element.

Available features:

- Female threaded connections up to 1 1/2" and flanged connections up to 4", for a maximum flow rate of 3000 l/min
- Multiple connections, to connect several return lines or drains
- Fine filtration rating, to get a good cleanliness level into the reservoir
- Bypass valve, to relieve excessive pressure drop across the filter media
- Magnetic filter, to hold the ferrous particles
- 2, 3, 4 or 8 fixing holes for installation, to suit a variety of reservoir surfaces
- Flat Seal to suit a variety of reservoir surfaces
- Oil dipstick, to easily check the level of the fluid into the reservoir (separate item)
- Diffuser, to reduce the risk of aeration, foaming and noise
- Filler plug, to fill cleaned fluid into the tank without an additional plug
- Integrated breather filter, to clean the air that moves into the reservoir as result of the oil level fluctuation (MPH110/114)
- Integrated breather filter with pressurization valve, to clean the air that moves into the reservoir as result of the oil level fluctuation and to guarantee the pressurization into the reservoir (MPH110/114)
- Visual, electrical and electronic clogging indicators

Common applications:

Heavy duty industrial equipment

Technical data

Filter housing materials

- Head
  Aluminium: MPH 110-114-116-120-250
  Anodized Aluminium: MPH 630-850
  Painted Aluminium: MPH 660

- Cover
  Nylon: MPH 110-114-116-120
  Aluminium: MPH 250
  Anodized Aluminium: MPH 630
  Painted Aluminium: MPH 660
  Steel: MPH 850

- Insert assembly
  Nylon: MPH 110-114-116-120
  Aluminium: MPH 250-630-660-850

- Diffuser: Tinned Steel

- Valve: Phosphatized Steel

Bypass valve

- Opening pressure 175 kPa (1.75 bar)±10%
- Opening pressure 250 kPa (2.5 bar) ±10%, except for MPH 850

Δp element type

- Microfibre filter elements - series MR: 10 bar
- Fluid flow through the filter element from IN to OUT

Seals

- Standard NBR series A
- Optional FPM series V

Temperature

From -25 °C to +110 °C

Note

MPH filters are provided for vertical mounting

Weights [kg] and volumes [dm³]

Filter series	Weights [kg]						Volumes [dm³]					
	Length	1	2	3	4	5	Length	1	2	3	4	5
MPH 110		1.60	1.70	1.80	2.20	2.60		1.60	1.70	1.80	2.20	2.60
MPH 114		1.60	1.70	1.80	2.20	2.60		1.60	1.70	1.80	2.20	2.60
MPH 116		1.60	1.70	1.80	2.20	2.60		1.60	1.70	1.80	2.20	2.60
MPH 120		1.60	1.70	1.80	2.20	2.60		1.60	1.70	1.80	2.20	2.60
MPH 250		3.60	3.90	4.20	5.60	-		4.40	4.40	5.40	8.00	-
MPH 630		6.50	7.00	7.40	8.50	10.50		7.30	9.00	11.00	13.00	19.20
MPH 660		-	-	-	11.50	14.00		-	-	-	14.60	21.00
MPH 850		32.00	35.00	38.00	42.00	-		13.00	16.50	21.00	25.00	-

FILTER ASSEMBLY SIZING
Flow rates [l/min]

Filter series	Length	A03	A06	A10	A16	A25	M25 M60 M90	P10	P25
MPH 110-114 116-120	1	26	29	72	79	107	282	164	190
	2	43	46	112	114	161	318	164	190
	3	64	72	132	156	178	324	219	251
	4	90	99	184	198	216	324	266	302
	5	117	128	201	219	244	324	282	318
MPH 250	1	93	102	210	251	315	1093	339	383
	2	124	151	327	412	421	1122	460	514
	3	189	221	418	445	500	1137	544	616
	4	261	304	592	670	766	1166	832	923
MPH 630	1	160	200	369	423	518	1894	565	632
	2	240	257	571	611	1045	1929	1137	1285
	3	330	374	745	788	1308	1938	1416	1577
	4	374	403	887	1010	1348	1956	1448	1612
	5	625	698	1210	1257	1723	2121	1839	1929
MPH 660	4	370	399	903	1042	1460	2376	1596	1830
	5	624	699	1282	1343	1997	2663	2182	2331
MPH 850	1	775	1041	1246	1568	2242	3311	2371	2625
	2	1176	1522	1682	1747	2449	3378	2684	2886
	3	1490	1914	1995	2014	3035	3405	3144	3220
	4	1668	2088	2305	2363	3169	3517	3272	3378

Maximum flow rate for a complete return filter with a pressure drop Δp = 0.5 bar.
The reference fluid has a kinematic viscosity of 30 mm^2/s (cSt) and a density of 0.86 kg/dm^3.
For different pressure drop or fluid viscosity we recommend to use our selection software available on www.mpfiltri.com.
You can also calculate the right size using the formulas present on the FILTER SIZING paragraph at the beginning of the full catalogue or at the beginning of the filter family brochure.
Please, contact our Sales Department for further additional information.

Hydraulic symbols

Filter series	Style 1 connection	Style 2 connections	Style 3 connections
MPH 110		•	
MPH 114	•		
MPH 116	•		
MPH 120			•
MPH 250	•	•	
MPH 630	•	•	
MPH 660	•		
MPH 850		•	

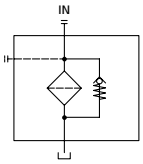

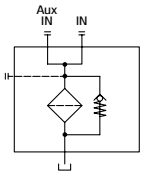

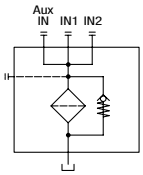

Pressure drop

Filter housings Δp pressure drop

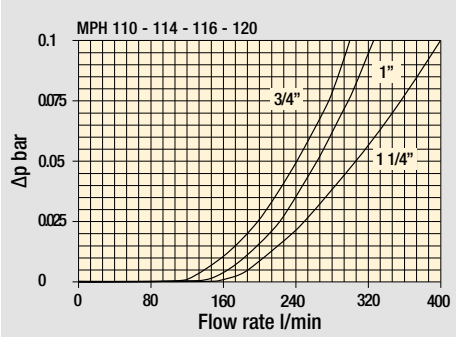

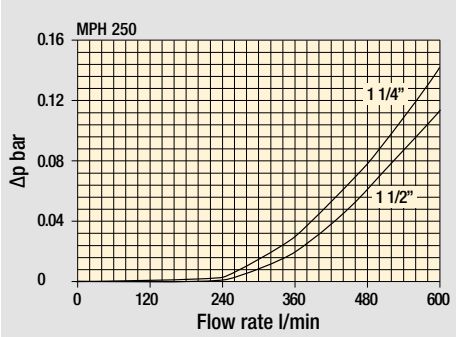

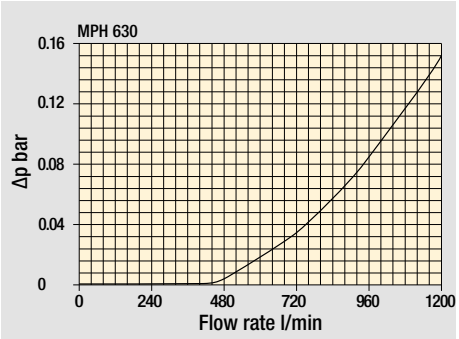

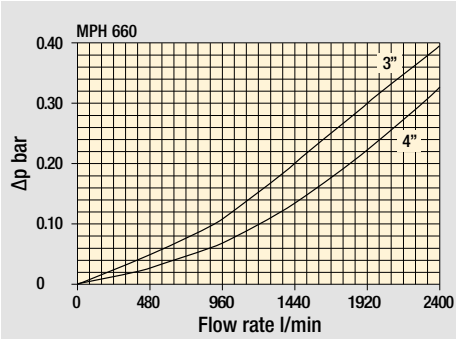

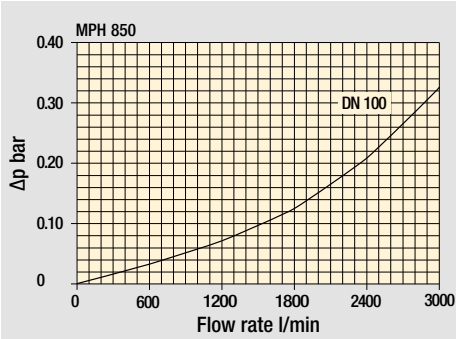

Bypass valve pressure drop

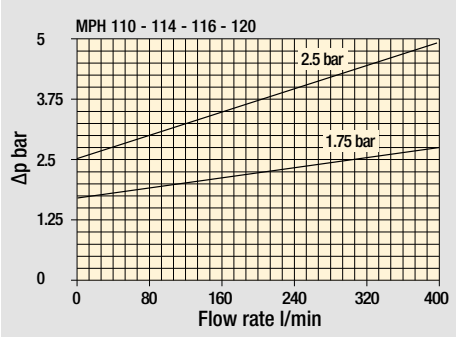

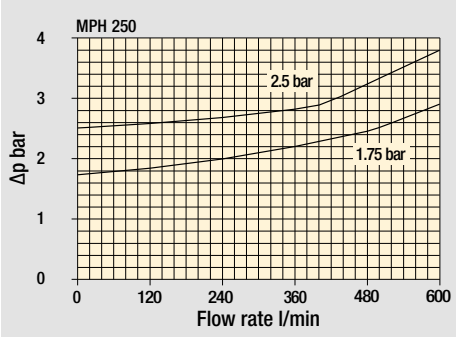

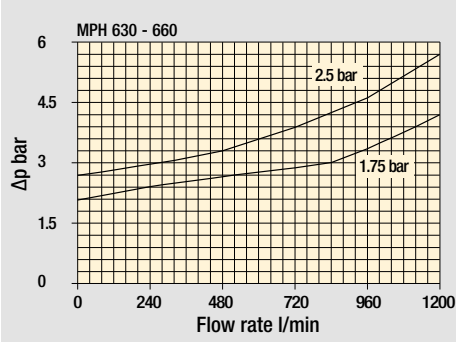

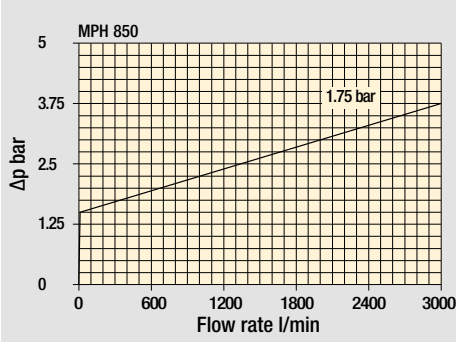

Air breather pressure drop

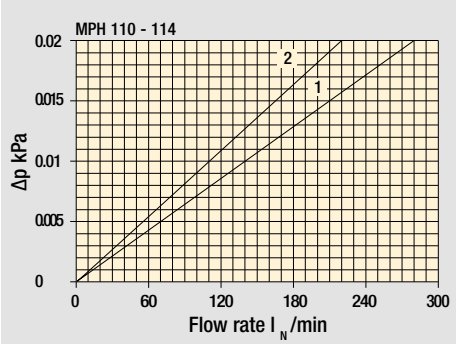

1 C With air breather 10 µm
2 D With anti-splash and SAP50 10 µm

The curves are plotted using mineral oil with density of 0.86 kg/dm³ in compliance with ISO 3968. Δp varies proportionally with density.

MPH MPH110

Designation & Ordering code

COMPLETE FILTER

Configuration example: MPH110 | 1 | S | D | S | A | G1 | 1 | A10 | P01

Series and size

MPH110

Length

1 | 2 | 3 | 4 | 5 |

Bypass valve

S	Without bypass	**C**	1.75 bar	**E**	2.5 bar

Diffuser and magnetic filter

D	With diffuser, with magnetic filter
F	With diffuser, without magnetic filter
O	Without diffuser, with magnetic filter
E	Without diffuser, without magnetic filter

Air breather

S	Without air breather
C	With air breather 10 µm
D	With anti-splash and air breather SAP050 10 µm
P	With anti-splash and air breather SAP050 10 µm pressurization 0.5 bar

Seals and treatments

		Filtration rating Axx	Mxx	Pxx
A	NBR	•	•	•
V	FPM	•	•	•
W	NBR head anodized (filter element compatible with fluids HFA-HFB-HFC)	•	•	
Z	FPM head anodized (filter element compatible with fluids HFA-HFB-HFC)	•	•	

Main Connections		Aux size 1	Aux size 2
G1	G 3/4”	G 3/8”	G 1/2”
G2	G 1”		
G3	G 1 1/4”		
G4	3/4” NPT	3/8” NPT	1/2” NPT
G5	1” NPT		
G6	1 1/4” NPT		

Main Connections		Aux size 1	Aux size 2
G7	SAE 12 - 1 1/16” - 12 UN	SAE 6 - 9/16” - 18 UNF	SAE 8 - 3/4” - 16 UNF
G8	SAE 16 - 1 5/16” - 12 UN		
G9	SAE 20 - 1 5/8” - 12 UN		

Aux connection - see previous table

0	Not machined	**1**	Aux size 1	**2**	Aux size 2

Filtration rating (filter media)

A03	Inorganic microfiber 3 µm	**M25**	Wire mesh 25 µm
A06	Inorganic microfiber 6 µm	**M60**	Wire mesh 60 µm
A10	Inorganic microfiber 10 µm	**M90**	Wire mesh 90 µm
A16	Inorganic microfiber 16 µm	**P10**	Resin impregnated paper 10 µm
A25	Inorganic microfiber 25 µm	**P25**	Resin impregnated paper 25 µm

Execution

P01	MP Filtri standard
Pxx	Customized

FILTER ELEMENT

Configuration example: MR100 | 1 | A10 | A | P01

Element series and size

MR100

Element length

1 | 2 | 3 | 4 | 5 |

Filtration rating (filter media)

A03	Inorganic microfiber 3 µm	**M25**	Wire mesh 25 µm
A06	Inorganic microfiber 6 µm	**M60**	Wire mesh 60 µm
A10	Inorganic microfiber 10 µm	**M90**	Wire mesh 90 µm
A16	Inorganic microfiber 16 µm	**P10**	Resin impregnated paper 10 µm
A25	Inorganic microfiber 25 µm	**P25**	Resin impregnated paper 25 µm

Seals

A	NBR
V	FPM

Execution

P01	MP Filtri standard
Pxx	Customized

ACCESSORIES

Indicators		page
BVA	Axial pressure gauge	240
BVR	Radial pressure gauge	240
BVP	Visual pressure indicator with automatic reset	241
BVQ	Visual pressure indicator with manual reset	241
BEA	Electrical pressure indicator	239
BEM	Electrical pressure indicator	239
BLA	Electrical / visual pressure indicator	239-240

Additional features		page
DPT	Dipstick	249

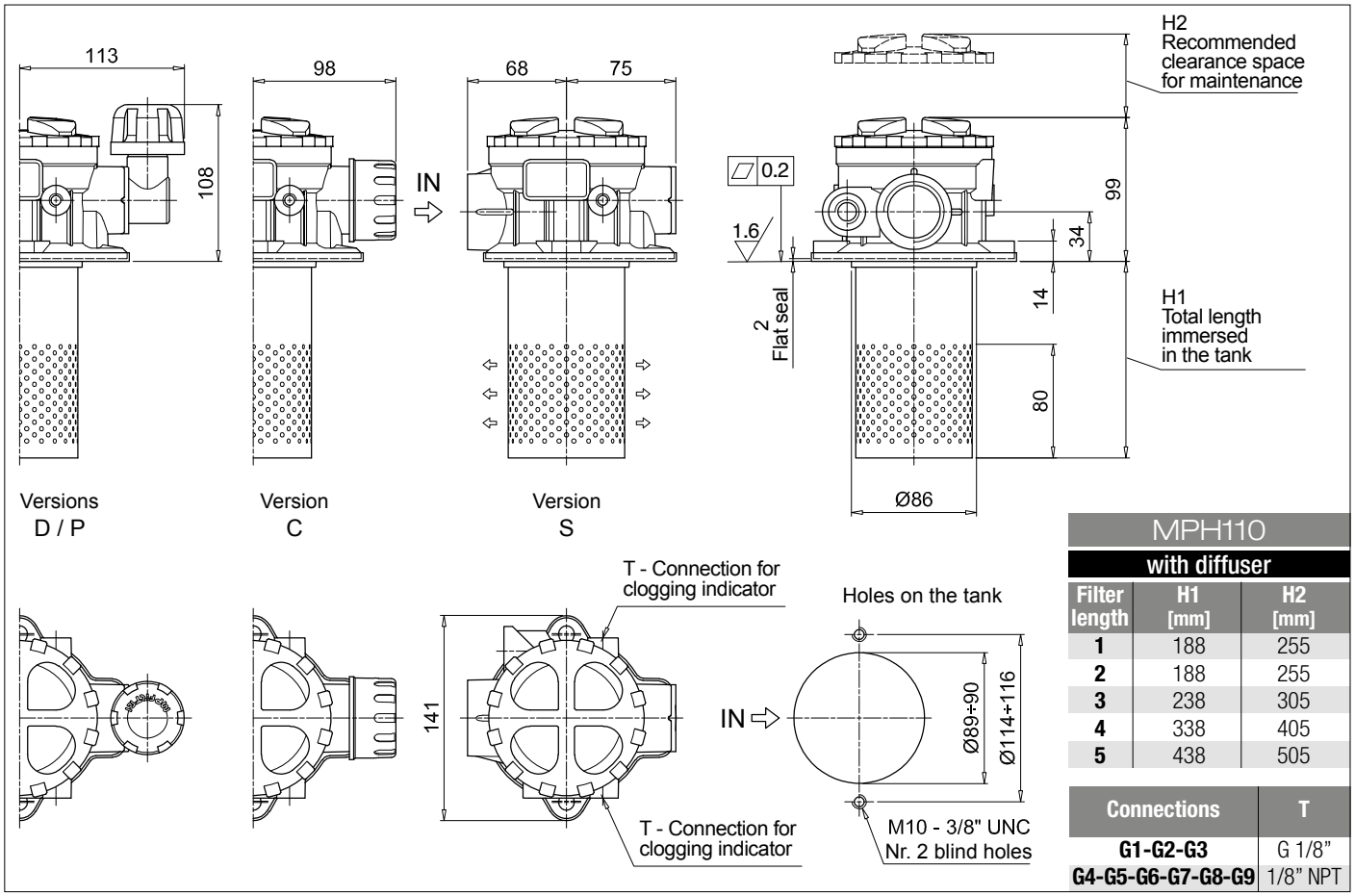

MPH110 with diffuser		
Filter length	H1 [mm]	H2 [mm]
1	188	255
2	188	255
3	238	305
4	338	405
5	438	505

Connections	T
G1-G2-G3	G 1/8"
G4-G5-G6-G7-G8-G9	1/8" NPT

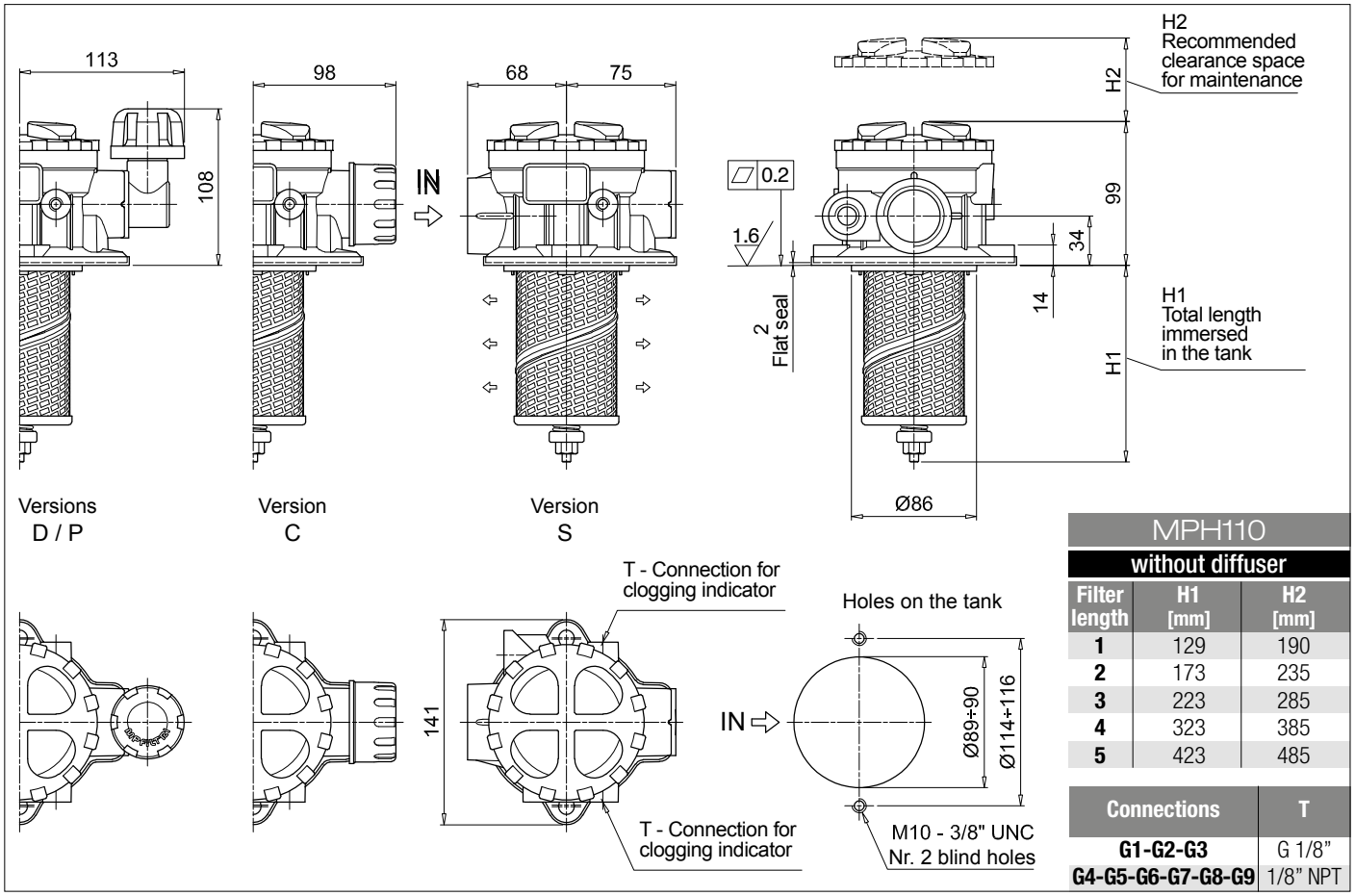

MPH110 without diffuser		
Filter length	H1 [mm]	H2 [mm]
1	129	190
2	173	235
3	223	285
4	323	385
5	423	485

Connections	T
G1-G2-G3	G 1/8"
G4-G5-G6-G7-G8-G9	1/8" NPT

MPH MPH114

Designation & Ordering code

COMPLETE FILTER

Configuration example: MPH114 | 3 | C | E | C | Z | G6 | M60 | P01

Series and size

MPH114

Length

1 | 2 | 3 | 4 | 5 |

Bypass valve

S	Without bypass	**C**	1.75 bar	**E**	2.5 bar

Diffuser and magnetic filter

D	With diffuser, with magnetic filter
F	With diffuser, without magnetic filter
O	Without diffuser, with magnetic filter
E	Without diffuser, without magnetic filter

Air breather

S	Without air breather
C	With air breather 10 µm
D	With anti-splash and air breather SAP050 10 µm
P	With anti-splash and air breather SAP050 10 µm pressurization 0.5 bar

Seals and treatments

		Filtration rating Axx	Mxx	Pxx
A	NBR	•	•	•
V	FPM	•	•	•
W	NBR head anodized (filter element compatible with fluids HFA-HFB-HFC)	•	•	
Z	FPM head anodized (filter element compatible with fluids HFA-HFB-HFC)	•	•	

Connections

G1	G 3/4”	**G6**	1 1/4” NPT
G2	G 1”	**G7**	SAE 12 - 1 1/16” - 12 UN
G3	G 1 1/4”	**G8**	SAE 16 - 1 5/16” - 12 UN
G4	3/4” NPT	**G9**	SAE 20 - 1 5/8” - 12 UN
G5	1” NPT		

Filtration rating (filter media)

A03	Inorganic microfiber 3 µm	**M25**	Wire mesh 25 µm
A06	Inorganic microfiber 6 µm	**M60**	Wire mesh 60 µm
A10	Inorganic microfiber 10 µm	**M90**	Wire mesh 90 µm
A16	Inorganic microfiber 16 µm	**P10**	Resin impregnated paper 10 µm
A25	Inorganic microfiber 25 µm	**P25**	Resin impregnated paper 25 µm

Execution

P01	MP Filtri standard
Pxx	Customized

FILTER ELEMENT

Configuration example: MR100 | 3 | M60 | V | P01

Element series and size

MR100

Element length

1 | 2 | 3 | 4 | 5 |

Filtration rating (filter media)

A03	Inorganic microfiber 3 µm	**M25**	Wire mesh 25 µm
A06	Inorganic microfiber 6 µm	**M60**	Wire mesh 60 µm
A10	Inorganic microfiber 10 µm	**M90**	Wire mesh 90 µm
A16	Inorganic microfiber 16 µm	**P10**	Resin impregnated paper 10 µm
A25	Inorganic microfiber 25 µm	**P25**	Resin impregnated paper 25 µm

Seals

A	NBR
V	FPM

Execution

P01	MP Filtri standard
Pxx	Customized

ACCESSORIES

Indicators		page
BVA	Axial pressure gauge	240
BVR	Radial pressure gauge	240
BVP	Visual pressure indicator with automatic reset	241
BVQ	Visual pressure indicator with manual reset	241
BEA	Electrical pressure indicator	239
BEM	Electrical pressure indicator	239
BLA	Electrical / visual pressure indicator	239-240

Additional features		page
DPT	Dipstick	249

Dimensions

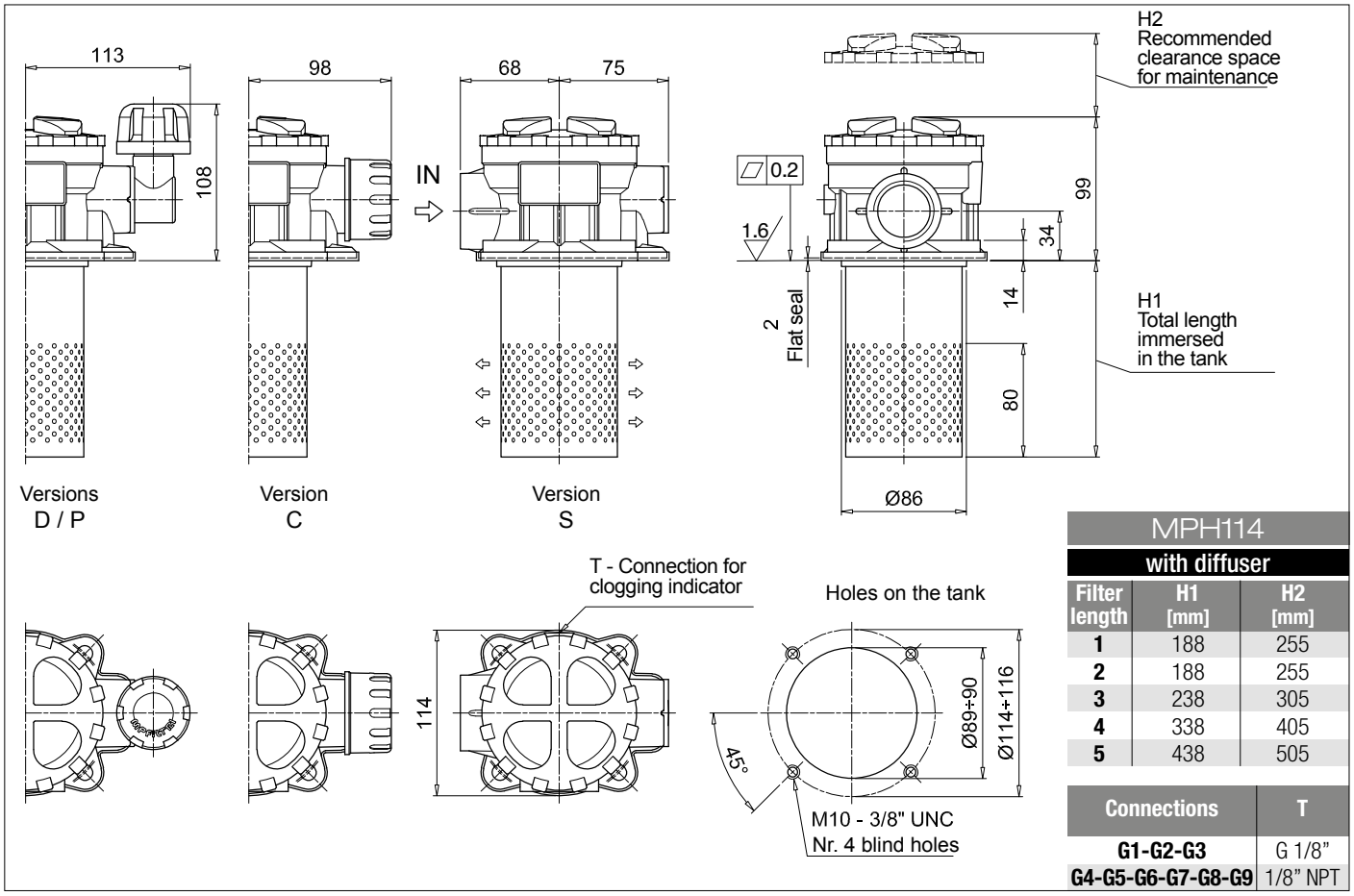

MPH114 with diffuser		
Filter length	H1 [mm]	H2 [mm]
1	188	255
2	188	255
3	238	305
4	338	405
5	438	505

Connections	T
G1-G2-G3	G 1/8"
G4-G5-G6-G7-G8-G9	1/8" NPT

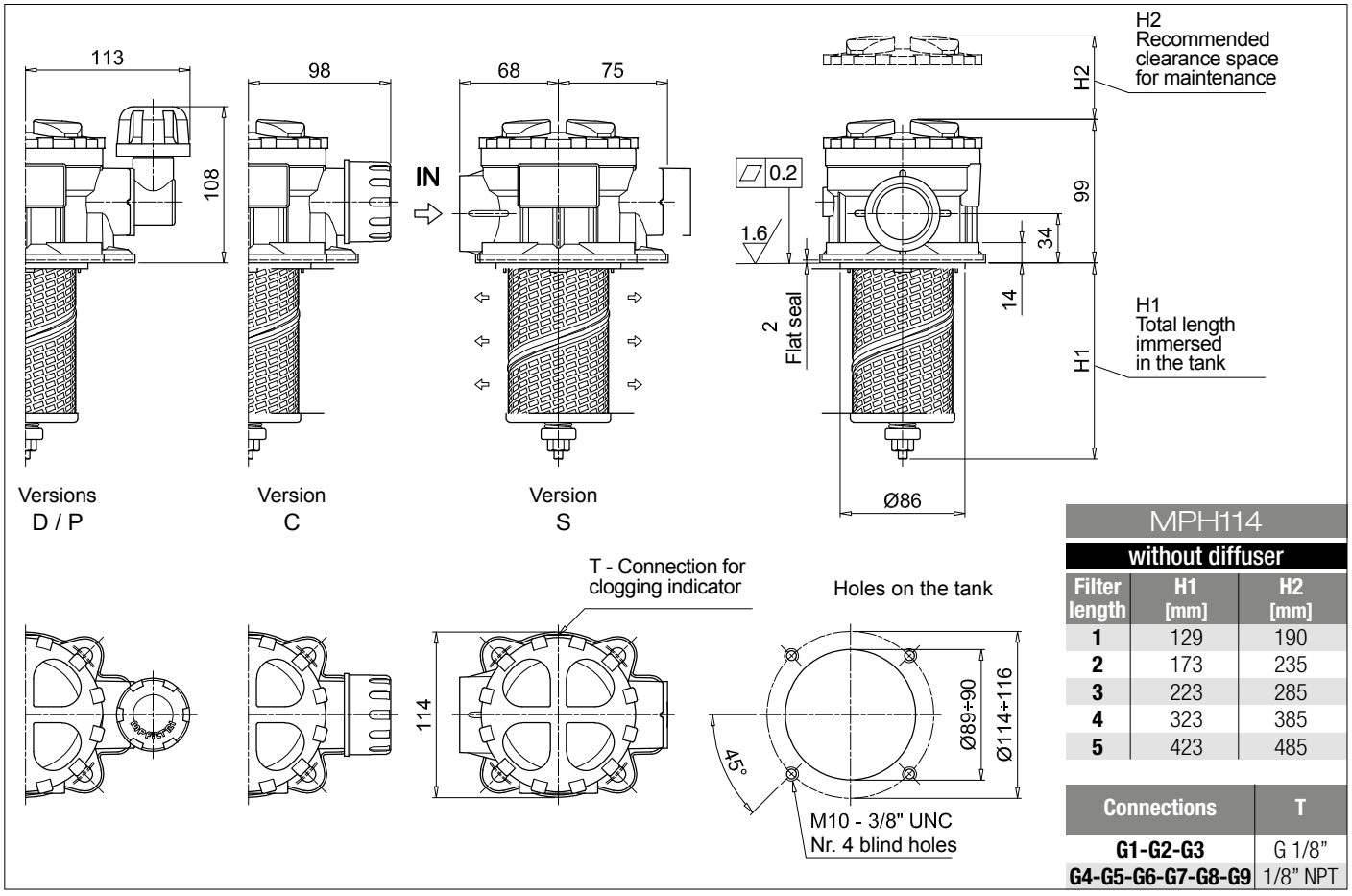

MPH114 without diffuser		
Filter length	H1 [mm]	H2 [mm]
1	129	190
2	173	235
3	223	285
4	323	385
5	423	485

Connections	T
G1-G2-G3	G 1/8"
G4-G5-G6-G7-G8-G9	1/8" NPT

MPH MPH116

Designation & Ordering code

COMPLETE FILTER

Configuration example: MPH116 | 5 | S | D | S | A | G1 | A10 | P01

Series and size

MPH116

Length

1 | **2** | **3** | **4** | **5**

Bypass valve

S	Without bypass	**C**	1.75 bar	**E**	2.5 bar

Diffuser and magnetic filter

D With diffuser, with magnetic filter
F With diffuser, without magnetic filter
O Without diffuser, with magnetic filter
E Without diffuser, without magnetic filter

Air breather

S Without air breather

Seals and treatments

		Filtration rating Axx	Mxx	Pxx
A	NBR	•	•	•
V	FPM	•	•	•
W	NBR head anodized (filter element compatible with fluids HFA-HFB-HFC)	•	•	
Z	FPM head anodized (filter element compatible with fluids HFA-HFB-HFC)	•	•	

Flat seal on the head on request

Connections

G1	G 3/4"	**G6**	1 1/4" NPT
G2	G 1"	**G7**	SAE 12 - 1 1/16" - 12 UN
G3	G 1 1/4"	**G8**	SAE 16 - 1 5/16" - 12 UN
G4	3/4" NPT	**G9**	SAE 20 - 1 5/8" - 12 UN
G5	1" NPT		

Filtration rating (filter media)

A03	Inorganic microfiber 3 µm	**M25**	Wire mesh 25 µm
A06	Inorganic microfiber 6 µm	**M60**	Wire mesh 60 µm
A10	Inorganic microfiber 10 µm	**M90**	Wire mesh 90 µm
A16	Inorganic microfiber 16 µm	**P10**	Resin impregnated paper 10 µm
A25	Inorganic microfiber 25 µm	**P25**	Resin impregnated paper 25 µm

Execution

P01 MP Filtri standard
Pxx Customized

FILTER ELEMENT

Configuration example: MR100 | 5 | A10 | A | P01

Element series and size

MR100

Element length

1 | **2** | **3** | **4** | **5**

Filtration rating (filter media)

A03	Inorganic microfiber 3 µm	**M25**	Wire mesh 25 µm
A06	Inorganic microfiber 6 µm	**M60**	Wire mesh 60 µm
A10	Inorganic microfiber 10 µm	**M90**	Wire mesh 90 µm
A16	Inorganic microfiber 16 µm	**P10**	Resin impregnated paper 10 µm
A25	Inorganic microfiber 25 µm	**P25**	Resin impregnated paper 25 µm

Seals

A NBR
V FPM

Execution

P01 MP Filtri standard
Pxx Customized

ACCESSORIES

Indicators		page
BVA	Axial pressure gauge	240
BVR	Radial pressure gauge	240
BVP	Visual pressure indicator with automatic reset	241
BVQ	Visual pressure indicator with manual reset	241
BEA	Electrical pressure indicator	239
BEM	Electrical pressure indicator	239
BLA	Electrical / visual pressure indicator	239-240

Additional features		page
DPT	Dipstick	249

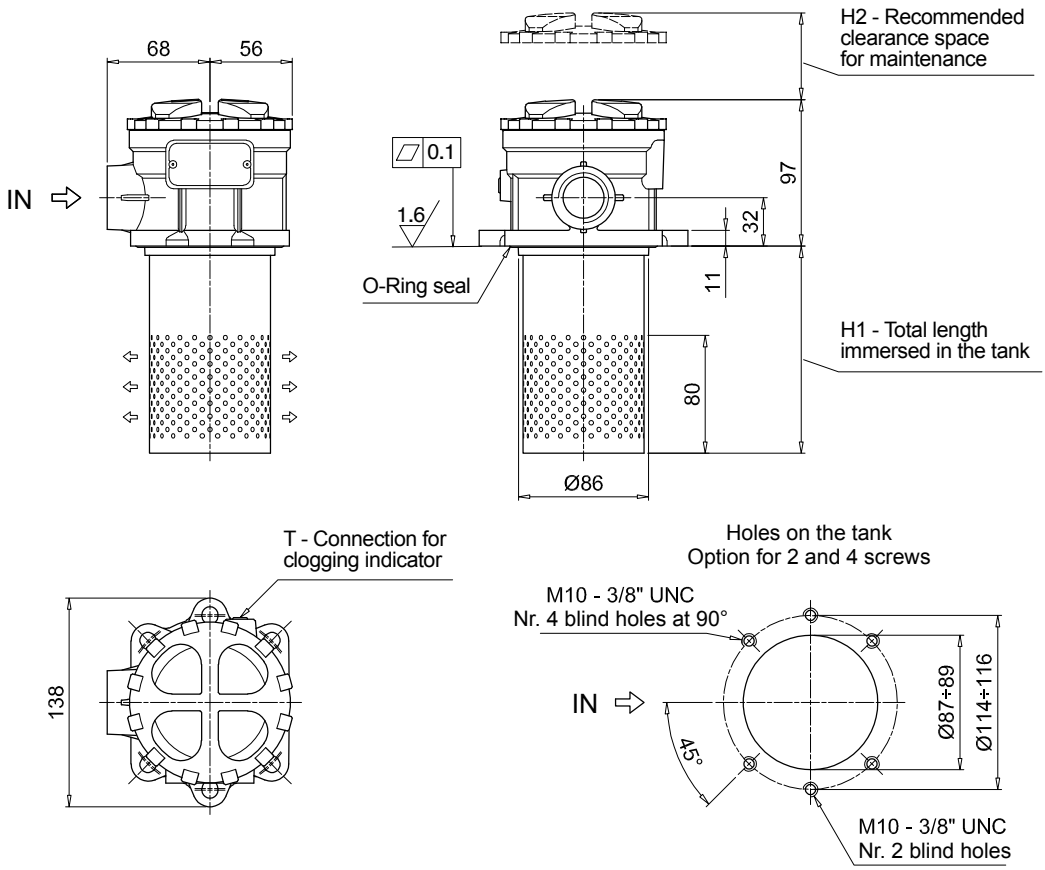

MPH116 with diffuser		
Filter length	H1 [mm]	H2 [mm]
1	190	255
2	190	255
3	240	305
4	340	405
5	440	505

Connections	T
G1-G2-G3	G 1/8"
G4-G5-G6-G7-G8-G9	1/8" NPT

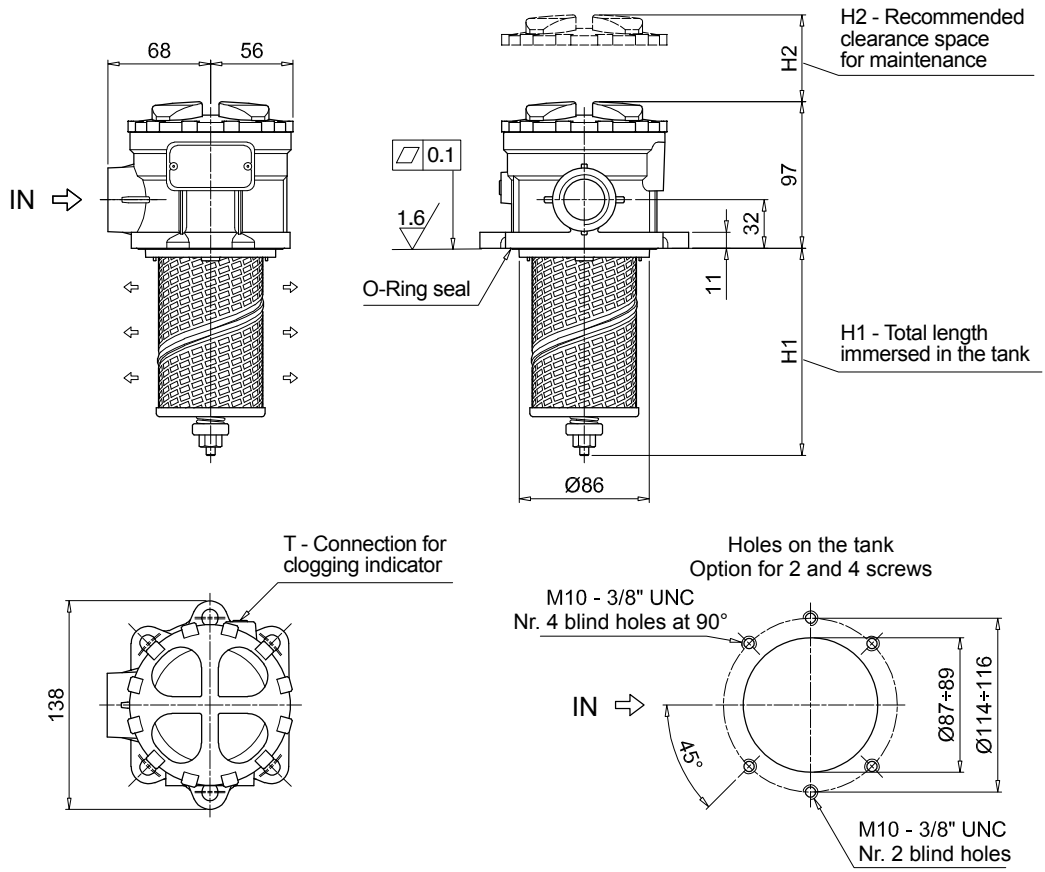

MPH116 without diffuser		
Filter length	H1 [mm]	H2 [mm]
1	131	190
2	175	235
3	225	285
4	325	385
5	425	485

Connections	T
G1-G2-G3	G 1/8"
G4-G5-G6-G7-G8-G9	1/8" NPT

MPH MPH120

Designation & Ordering code

COMPLETE FILTER

Configuration example: MPH120 | 1 | S | D | A | G1 | 1 | A10 | P01

Series and size

MPH120

Length

1 | **2** | **3** | **4** | **5** |

Bypass valve

S	Without bypass	**C**	1.75 bar	**E**	2.5 bar

Diffuser and magnetic filter

D	With diffuser, with magnetic filter
F	With diffuser, without magnetic filter
O	Without diffuser, with magnetic filter
E	Without diffuser, without magnetic filter

Seals and treatments

		Filtration rating Axx	Mxx	Pxx
A	NBR	•	•	•
V	FPM	•	•	•
W	NBR head anodized (filter element compatible with fluids HFA-HFB-HFC)	•	•	
Z	FPM head anodized (filter element compatible with fluids HFA-HFB-HFC)	•	•	

Main Connections		Rear connections	Aux size 1	Aux size 2
G1	G 3/4”	G 3/4”	G 3/8”	G 1/2”
G2	G 1”	G 1”		
G3	G 1 1/4”	G 3/4”		
G4	3/4” NPT	3/4” NPT	3/8” NPT	1/2” NPT
G5	1” NPT	1” NPT		
G6	1 1/4” NPT	3/4” NPT		
G7	SAE 12 - 1 1/16” - 12 UN	SAE 12 - 1 1/16” - 12 UN	SAE 6 - 9/16” - 18 UNF	SAE 8 - 3/4” - 16 UNF
G8	SAE 16 - 1 5/16” - 12 UN	SAE 16 - 1 5/16” - 12 UN		
G9	SAE 20 - 1 5/8” - 12 UN	SAE 12 - 1 1/16” - 12 UN		

Aux connection - see previous table

0	Not machined	**1**	Aux size 1	**2**	Aux size 2

Filtration rating (filter media)

A03	Inorganic microfiber 3 µm	**M25**	Wire mesh 25 µm
A06	Inorganic microfiber 6 µm	**M60**	Wire mesh 60 µm
A10	Inorganic microfiber 10 µm	**M90**	Wire mesh 90 µm
A16	Inorganic microfiber 16 µm	**P10**	Resin impregnated paper 10 µm
A25	Inorganic microfiber 25 µm	**P25**	Resin impregnated paper 25 µm

Execution

P01	MP Filtri standard
Pxx	Customized

FILTER ELEMENT

Configuration example: MR100 | 1 | A10 | A | P01

Element series and size

MR100

Element length

1 | **2** | **3** | **4** | **5** |

Filtration rating (filter media)

A03	Inorganic microfiber 3 µm	**M25**	Wire mesh 25 µm
A06	Inorganic microfiber 6 µm	**M60**	Wire mesh 60 µm
A10	Inorganic microfiber 10 µm	**M90**	Wire mesh 90 µm
A16	Inorganic microfiber 16 µm	**P10**	Resin impregnated paper 10 µm
A25	Inorganic microfiber 25 µm	**P25**	Resin impregnated paper 25 µm

Seals

A	NBR
V	FPM

Execution

P01	MP Filtri standard
Pxx	Customized

ACCESSORIES

Indicators		page
BVA	Axial pressure gauge	240
BVR	Radial pressure gauge	240
BVP	Visual pressure indicator with automatic reset	241
BVQ	Visual pressure indicator with manual reset	241
BEA	Electrical pressure indicator	239
BEM	Electrical pressure indicator	239
BLA	Electrical / visual pressure indicator	239-240

Additional features		page
DPT	Dipstick	249

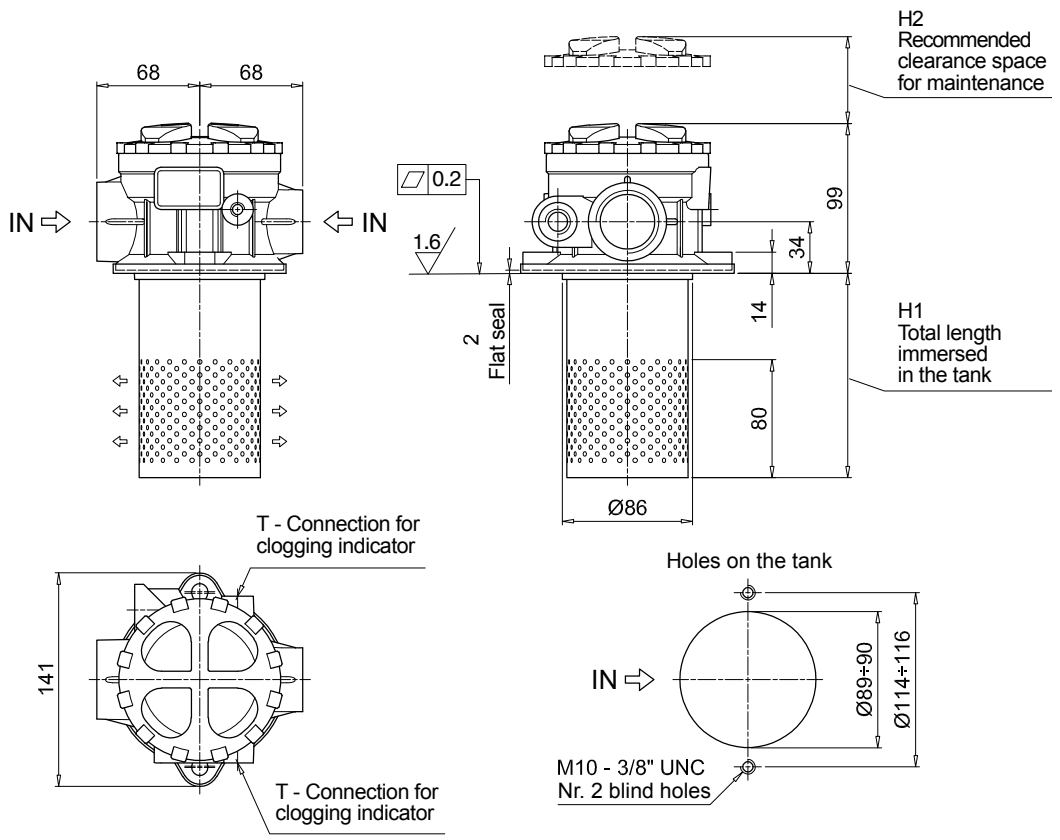

MPH120 with diffuser		
Filter length	H1 [mm]	H2 [mm]
1	188	255
2	188	255
3	238	305
4	338	405
5	438	505

Connections	T
G1-G2-G3	G 1/8"
G4-G5-G6-G7-G8-G9	1/8" NPT

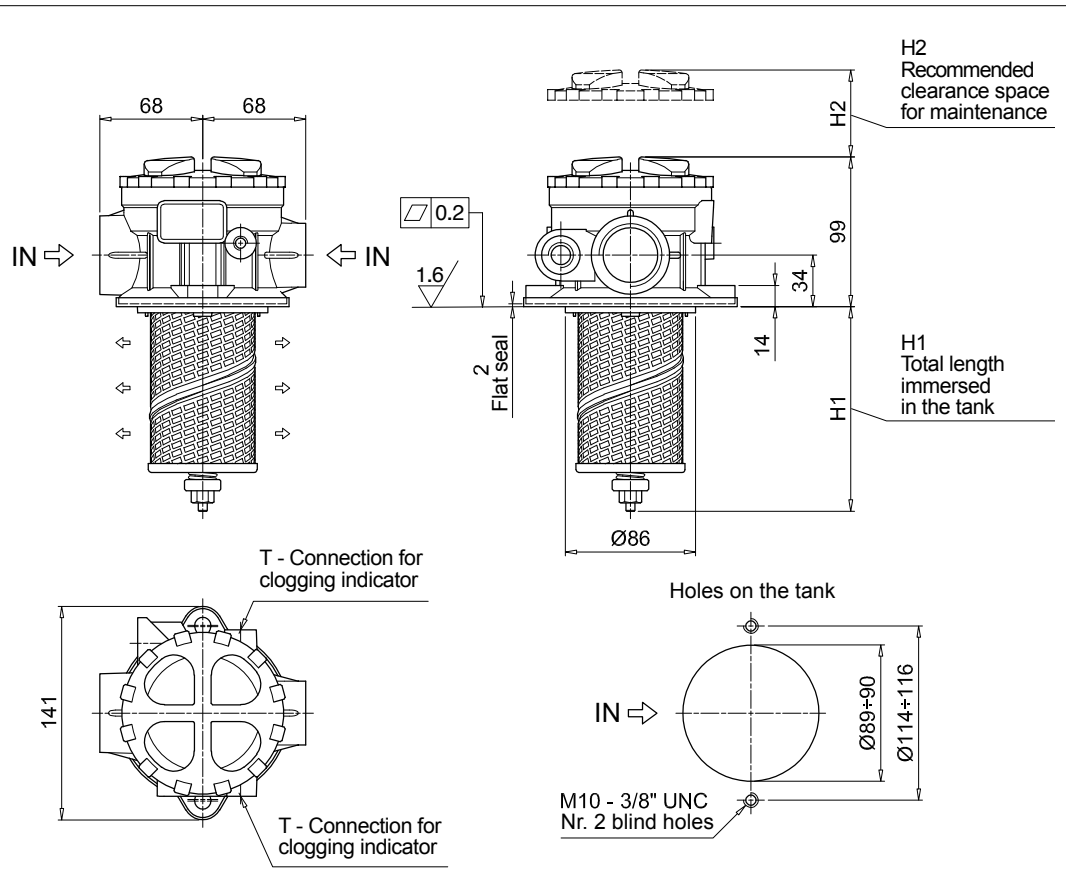

MPH120 without diffuser		
Filter length	H1 [mm]	H2 [mm]
1	129	190
2	173	235
3	223	285
4	323	385
5	423	485

Connections	T
G1-G2-G3	G 1/8"
G4-G5-G6-G7-G8-G9	1/8" NPT

MPH MPH250

Designation & Ordering code

COMPLETE FILTER

Configuration example: MPH250 | 1 | C | D | S | A | G1 | A10 | P01

Series and size

MPH250

Length

1 | 2 | 3 | 4 |

Bypass valve

S	Without bypass	**C**	1.75 bar	**E**	2.5 bar

Diffuser and magnetic filter

D	With diffuser, with magnetic filter
F	With diffuser, without magnetic filter
O	Without diffuser, with magnetic filter
E	Without diffuser, without magnetic filter

Air breather

S	Without air breather

Seals and treatments		Filtration rating Axx	Mxx	Pxx
A	NBR	•	•	•
V	FPM	•	•	•
W	NBR head anodized (filter element compatible with fluids HFA-HFB-HFC)	•	•	
Z	FPM head anodized (filter element compatible with fluids HFA-HFB-HFC)	•	•	

Main Connections		Rear connections
G1	G 1 1/2”	-
G2	G 1 1/2”	G 1 1/4”
G4	1 1/2” NPT	-
G5	1 1/2” NPT	1 1/4” NPT
G7	SAE 24 - 1 7/8” - 12 UN	-
G8	SAE 24 - 1 7/8” - 12 UN	SAE 20 - 1 5/8” - 12 UN
F1	1 1/2” SAE 3000 psi/M	-
F2	1 1/2” SAE 3000 psi/M	1 1/4” SAE 3000 psi/M
F3	1 1/2” SAE 3000 psi/UNC	-
F4	1 1/2” SAE 3000 psi/UNC	1 1/4” SAE 3000 psi/UNC

Filtration rating (filter media)

A03	Inorganic microfiber 3 µm	**M25**	Wire mesh 25 µm
A06	Inorganic microfiber 6 µm	**M60**	Wire mesh 60 µm
A10	Inorganic microfiber 10 µm	**M90**	Wire mesh 90 µm
A16	Inorganic microfiber 16 µm	**P10**	Resin impregnated paper 10 µm
A25	Inorganic microfiber 25 µm	**P25**	Resin impregnated paper 25 µm

Execution

P01	MP Filtri standard
Pxx	Customized

FILTER ELEMENT

Configuration example: MR250 | 1 | A10 | A | P01

Element series and size

MR250

Element length

1 | 2 | 3 | 4 |

Filtration rating (filter media)

A03	Inorganic microfiber 3 µm	**M25**	Wire mesh 25 µm
A06	Inorganic microfiber 6 µm	**M60**	Wire mesh 60 µm
A10	Inorganic microfiber 10 µm	**M90**	Wire mesh 90 µm
A16	Inorganic microfiber 16 µm	**P10**	Resin impregnated paper 10 µm
A25	Inorganic microfiber 25 µm	**P25**	Resin impregnated paper 25 µm

Seals

A	NBR
V	FPM

Execution

P01	MP Filtri standard
Pxx	Customized

ACCESSORIES

Indicators		page
BVA	Axial pressure gauge	240
BVR	Radial pressure gauge	240
BVP	Visual pressure indicator with automatic reset	241
BVQ	Visual pressure indicator with manual reset	241
BEA	Electrical pressure indicator	239
BEM	Electrical pressure indicator	239
BLA	Electrical / visual pressure indicator	239-240

Dimensions

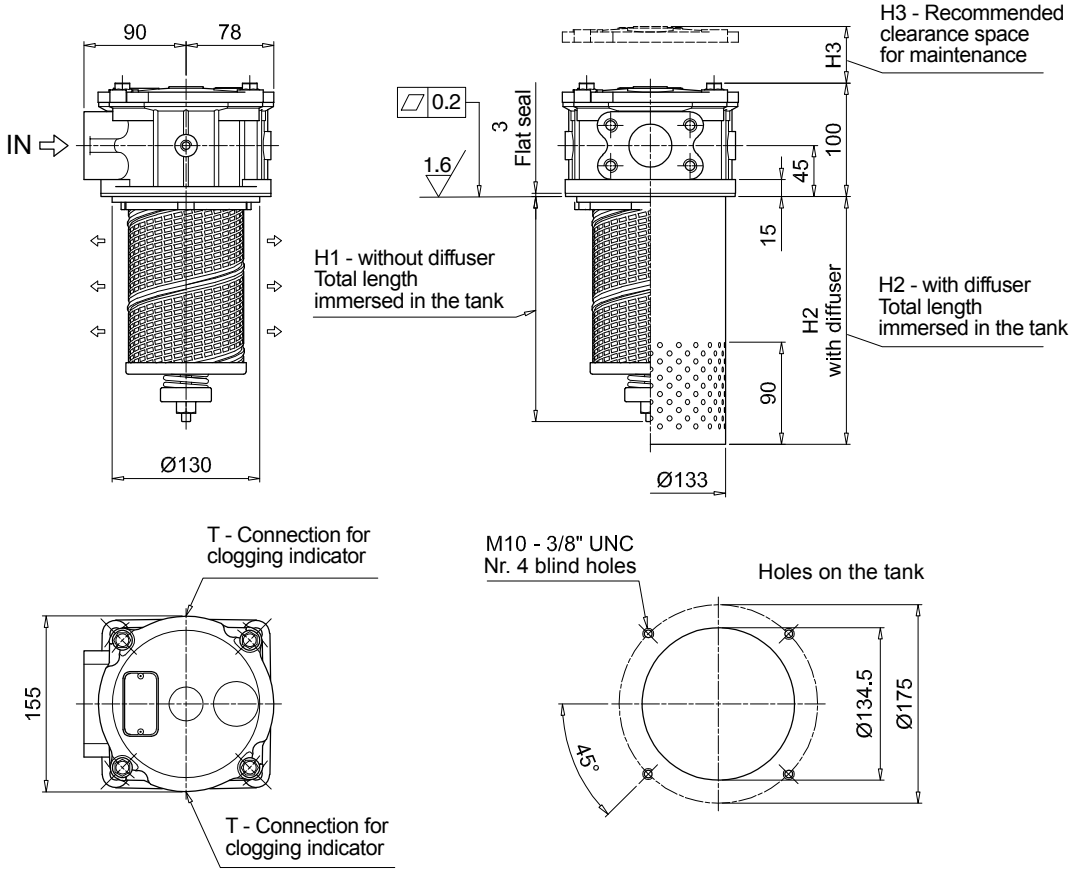

MPH250

1 connection port

Filter length	H1 [mm]	H2 [mm]	H3 [mm]
1	182	247	255
2	231	247	305
3	302	317	375
4	502	507	580

Connections	T
G1-G2-G3	G 1/8"
G4-G5-G6-G7-G8-G9	1/8" NPT
F1-F2	G 1/8"
F3-F4	1/8" NPT

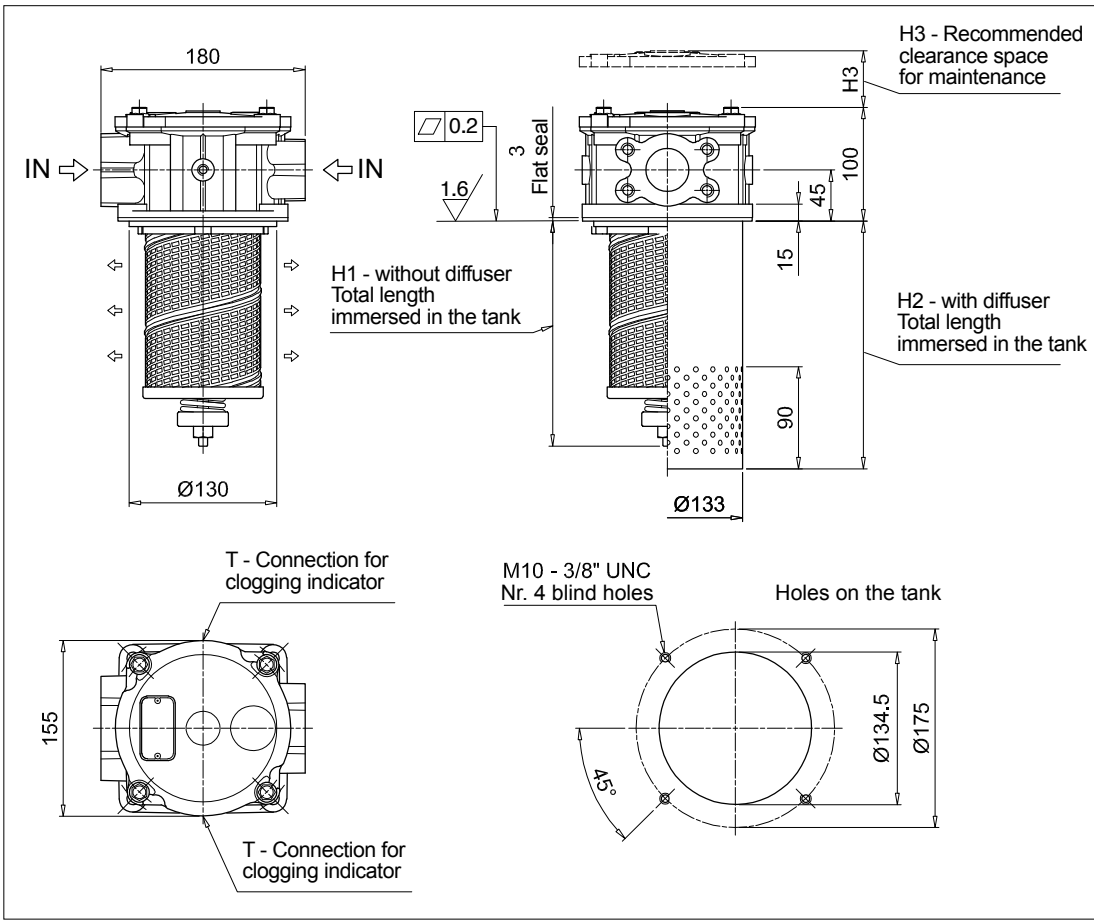

MPH250

2 connection ports

Filter length	H1 [mm]	H2 [mm]	H3 [mm]
1	182	247	255
2	231	247	305
3	302	317	375
4	502	507	580

Connections	T
G1-G2-G3	G 1/8"
G4-G5-G6-G7-G8-G9	1/8" NPT
F1-F2	G 1/8"
F3-F4	1/8" NPT

MPH MPH630

Designation & Ordering code

COMPLETE FILTER

Configuration example: MPH630 | 1 | S | E | S | W | F1 | M25 | P01

Series and size

MPH630

Length

1 | 2 | 3 | 4 | 5 |

Bypass valve

S	Without bypass	**C**	1.75 bar	**E**	2.5 bar

Diffuser and magnetic filter

D	With diffuser, with magnetic filter
F	With diffuser, without magnetic filter
O	Without diffuser, with magnetic filter
E	Without diffuser, without magnetic filter

Air breather

S	Without air breather

Seals and treatments		Filtration rating Axx	Mxx	Pxx
A	NBR	•	•	•
V	FPM	•	•	•
W	NBR head anodized (filter element compatible with fluids HFA-HFB-HFC)	•	•	
Z	FPM head anodized (filter element compatible with fluids HFA-HFB-HFC)	•	•	

Main Connections		Rear connections
F1	2 1/2" SAE 3000 psi/M	-
F2	2 1/2" SAE 3000 psi/M	2" SAE 3000 psi/M
F3	2 1/2" SAE 3000 psi/UNC	-
F4	2 1/2" SAE 3000 psi/UNC	2" SAE 3000 psi/UNC

Filtration rating (filter media)

A03	Inorganic microfiber 3 µm	**M25**	Wire mesh 25 µm
A06	Inorganic microfiber 6 µm	**M60**	Wire mesh 60 µm
A10	Inorganic microfiber 10 µm	**M90**	Wire mesh 90 µm
A16	Inorganic microfiber 16 µm	**P10**	Resin impregnated paper 10 µm
A25	Inorganic microfiber 25 µm	**P25**	Resin impregnated paper 25 µm

Execution

P01	MP Filtri standard
Pxx	Customized

FILTER ELEMENT

Configuration example: MR630 | 1 | M25 | A | P01

Element series and size

MR630

Element length

1 | 2 | 3 | 4 | 5 |

Filtration rating (filter media)

A03	Inorganic microfiber 3 µm	**M25**	Wire mesh 25 µm
A06	Inorganic microfiber 6 µm	**M60**	Wire mesh 60 µm
A10	Inorganic microfiber 10 µm	**M90**	Wire mesh 90 µm
A16	Inorganic microfiber 16 µm	**P10**	Resin impregnated paper 10 µm
A25	Inorganic microfiber 25 µm	**P25**	Resin impregnated paper 25 µm

Seals

A	NBR
V	FPM

Execution

P01	MP Filtri standard
Pxx	Customized

ACCESSORIES

Indicators		page
BVA	Axial pressure gauge	240
BVR	Radial pressure gauge	240
BVP	Visual pressure indicator with automatic reset	241
BVQ	Visual pressure indicator with manual reset	241
BEA	Electrical pressure indicator	239
BEM	Electrical pressure indicator	239
BLA	Electrical / visual pressure indicator	239-240

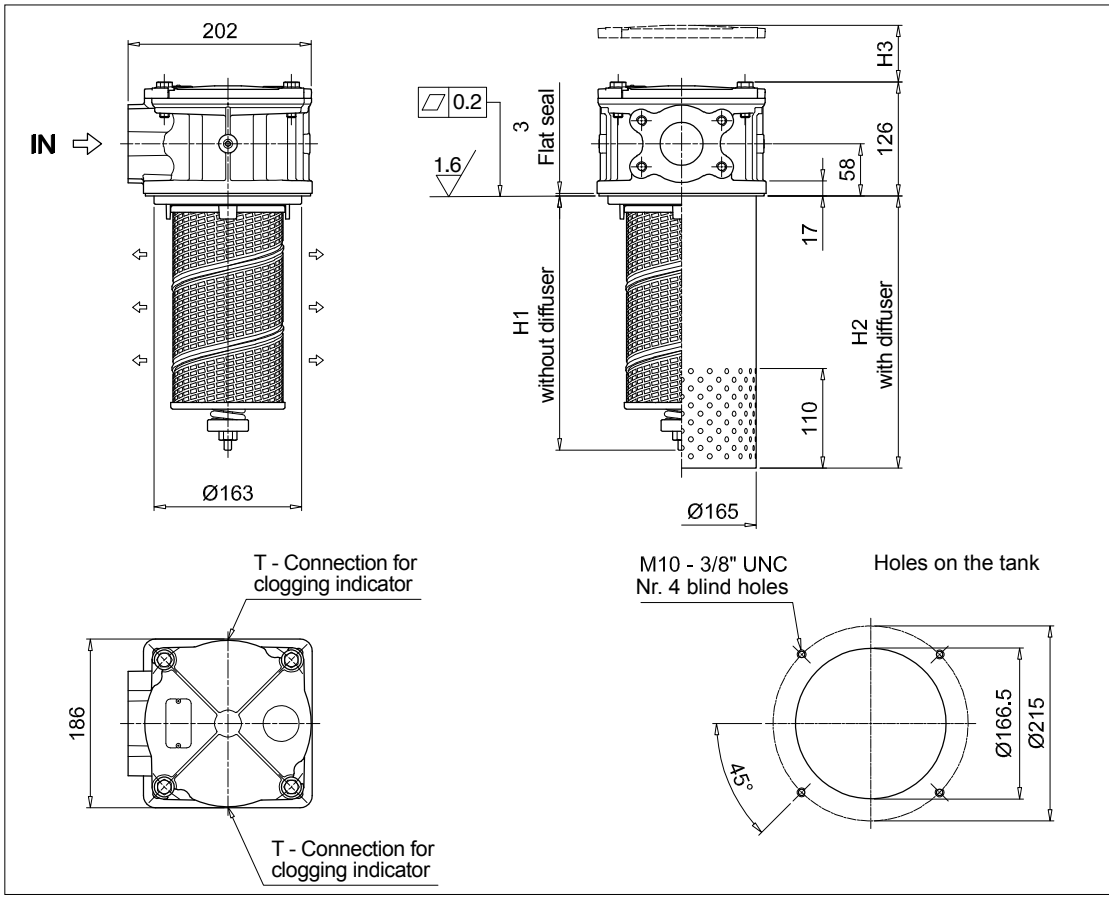

MPH630			
1 connection port			
Filter length	H1 [mm]	H2 [mm]	H3 [mm]
1	260	278	330
2	340	358	410
3	440	458	510
4	528	548	600
5	829	848	900

Connections	T
F1	G 1/8"
F3	1/8" NPT

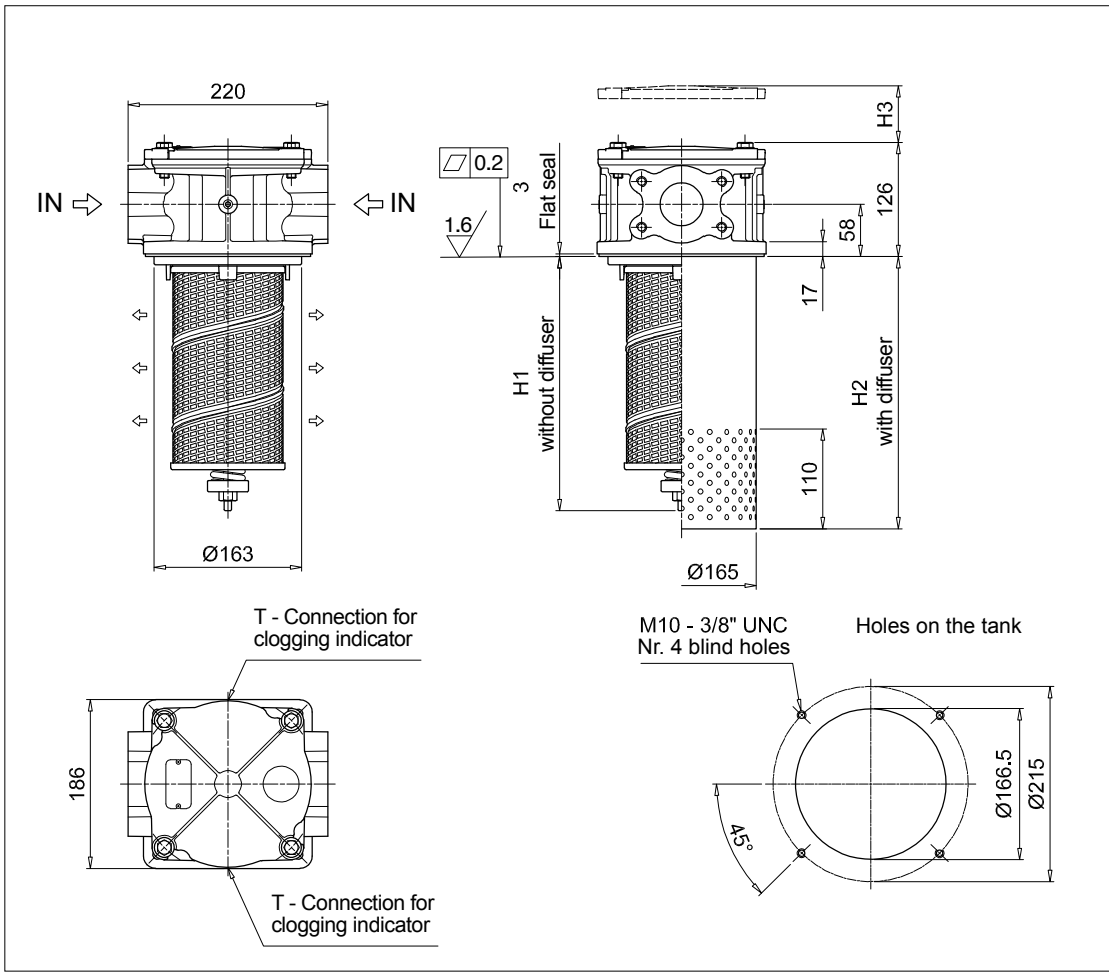

MPH630			
2 connection ports			
Filter length	H1 [mm]	H2 [mm]	H3 [mm]
1	260	278	330
2	340	358	410
3	440	458	510
4	528	548	600
5	829	848	900

Connections	T
F2	G 1/8"
F4	1/8" NPT

MPH MPH660

Designation & Ordering code

COMPLETE FILTER

Configuration example: MPH660 | 4 | C | D | S | A | F2 | A10 | P01

Series and size

MPH660

Length

4 | **5**

Bypass valve

S	Without bypass	**C**	1.75 bar	**E**	2.5 bar

Diffuser and magnetic filter

D	With diffuser, with magnetic filter
F	With diffuser, without magnetic filter
O	Without diffuser, with magnetic filter
E	Without diffuser, without magnetic filter

Air breather

S	Without air breather

Seals and treatments

		Filtration rating Axx	Mxx	Pxx
A	NBR	•	•	•
V	FPM	•	•	•
W	NBR head anodized (filter element compatible with fluids HFA-HFB-HFC)	•	•	
Z	FPM head anodized (filter element compatible with fluids HFA-HFB-HFC)	•	•	

Main Connections

F1	3” SAE 3000 psi/M
F2	4” SAE 3000 psi/M

Filtration rating (filter media)

A03	Inorganic microfiber 3 µm	**M25**	Wire mesh 25 µm
A06	Inorganic microfiber 6 µm	**M60**	Wire mesh 60 µm
A10	Inorganic microfiber 10 µm	**M90**	Wire mesh 90 µm
A16	Inorganic microfiber 16 µm	**P10**	Resin impregnated paper 10 µm
A25	Inorganic microfiber 25 µm	**P25**	Resin impregnated paper 25 µm

Execution

P01	MP Filtri standard
Pxx	Customized

FILTER ELEMENT

Configuration example: MR630 | 5 | M25 | A | P01

Element series and size

MR630

Element length

4 | **5**

Filtration rating (filter media)

A03	Inorganic microfiber 3 µm	**M25**	Wire mesh 25 µm
A06	Inorganic microfiber 6 µm	**M60**	Wire mesh 60 µm
A10	Inorganic microfiber 10 µm	**M90**	Wire mesh 90 µm
A16	Inorganic microfiber 16 µm	**P10**	Resin impregnated paper 10 µm
A25	Inorganic microfiber 25 µm	**P25**	Resin impregnated paper 25 µm

Seals

A	NBR
V	FPM

Execution

P01	MP Filtri standard
Pxx	Customized

ACCESSORIES

Indicators		page
BVA	Axial pressure gauge	240
BVR	Radial pressure gauge	240
BVP	Visual pressure indicator with automatic reset	241
BVQ	Visual pressure indicator with manual reset	241
BEA	Electrical pressure indicator	239
BEM	Electrical pressure indicator	239
BLA	Electrical / visual pressure indicator	239-240

Dimensions

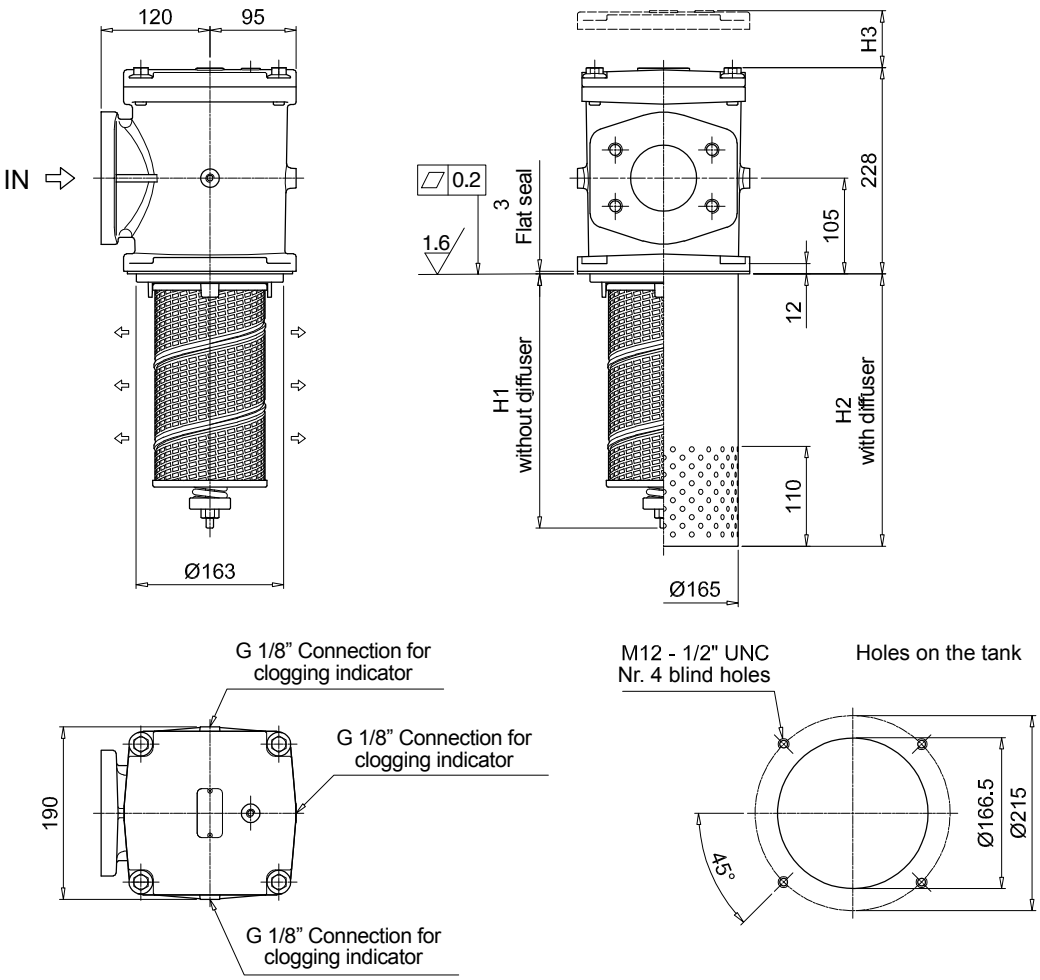

MPH660			
Filter length	H1 [mm]	H2 [mm]	H3 [mm]
4	538	548	610
5	838	848	910

MPH MPH850

Designation & Ordering code

COMPLETE FILTER

Configuration example: MPH850 | 1 | C | D | S | A | F1 | A10 | P01

Series and size

MPH850

Length

1 | **2** | **3** | **4**

Bypass valve

S	Without bypass	**C**	1.75 bar

Diffuser and magnetic filter

D	With diffuser, with magnetic filter
F	With diffuser, without magnetic filter
O	Without diffuser, with magnetic filter
E	Without diffuser, without magnetic filter

Air breather

S	Without air breather

Seals and treatments

		Filtration rating Axx	Mxx	Pxx
A	NBR	•	•	•
V	FPM	•	•	•
W	NBR head anodized (filter element compatible with fluids HFA-HFB-HFC)	•	•	
Z	FPM head anodized (filter element compatible with fluids HFA-HFB-HFC)	•	•	

Main Connections		Rear connections
F1	UNI 2223 DN 100 PN 10/16	3” SAE 3000 psi/M
F2	UNI 2223 DN 100 PN 10/16	3” SAE 3000 psi/UNC
F5	Not machined	3” SAE 3000 psi/M
F6	Not machined	3” SAE 3000 psi/UNC
F7	4” SAE 3000 psi/M	3” SAE 3000 psi/M
F8	4” SAE 3000 psi/UNC	3” SAE 3000 psi/UNC

Filtration rating (filter media)

A03	Inorganic microfiber 3 µm	**M25**	Wire mesh 25 µm
A06	Inorganic microfiber 6 µm	**M60**	Wire mesh 60 µm
A10	Inorganic microfiber 10 µm	**M90**	Wire mesh 90 µm
A16	Inorganic microfiber 16 µm	**P10**	Resin impregnated paper 10 µm
A25	Inorganic microfiber 25 µm	**P25**	Resin impregnated paper 25 µm

Execution

P01	MP Filtri standard
Pxx	Customized

FILTER ELEMENT

Configuration example: MR850 | 1 | A10 | A | P01

Element series and size

MR850

Element length

1 | **2** | **3** | **4**

Filtration rating (filter media)

A03	Inorganic microfiber 3 µm	**M25**	Wire mesh 25 µm
A06	Inorganic microfiber 6 µm	**M60**	Wire mesh 60 µm
A10	Inorganic microfiber 10 µm	**M90**	Wire mesh 90 µm
A16	Inorganic microfiber 16 µm	**P10**	Resin impregnated paper 10 µm
A25	Inorganic microfiber 25 µm	**P25**	Resin impregnated paper 25 µm

Seals

A	NBR
V	FPM

Execution

P01	MP Filtri standard
Pxx	Customized

ACCESSORIES

Indicators		page
BVA	Axial pressure gauge	240
BVR	Radial pressure gauge	240
BVP	Visual pressure indicator with automatic reset	241
BVQ	Visual pressure indicator with manual reset	241
BEA	Electrical pressure indicator	239
BEM	Electrical pressure indicator	239
BLA	Electrical / visual pressure indicator	239-240

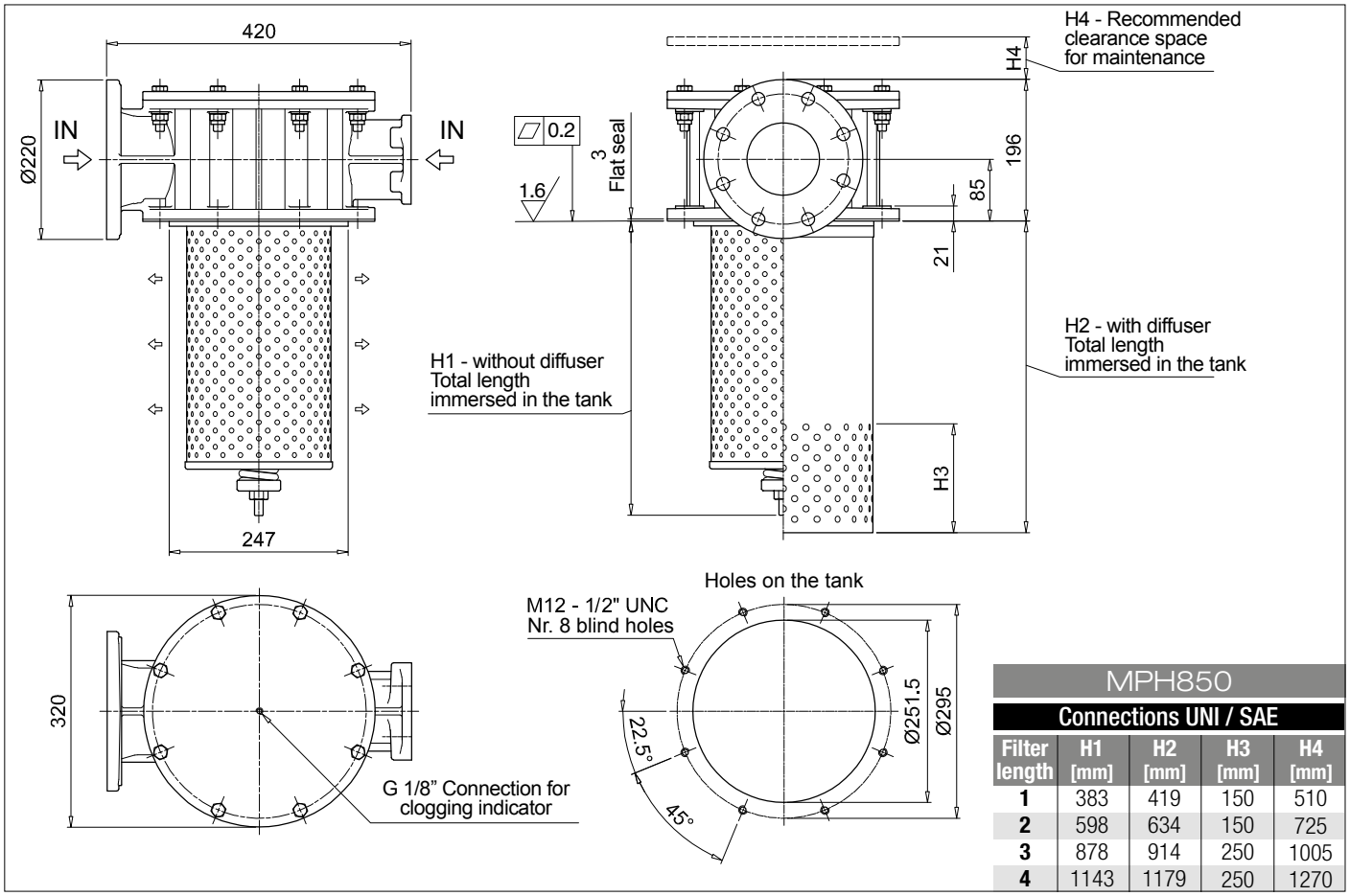

MPH850				
Connections UNI / SAE				
Filter length	**H1 [mm]**	**H2 [mm]**	**H3 [mm]**	**H4 [mm]**
1	383	419	150	510
2	598	634	150	725
3	878	914	250	1005
4	1143	1179	250	1270

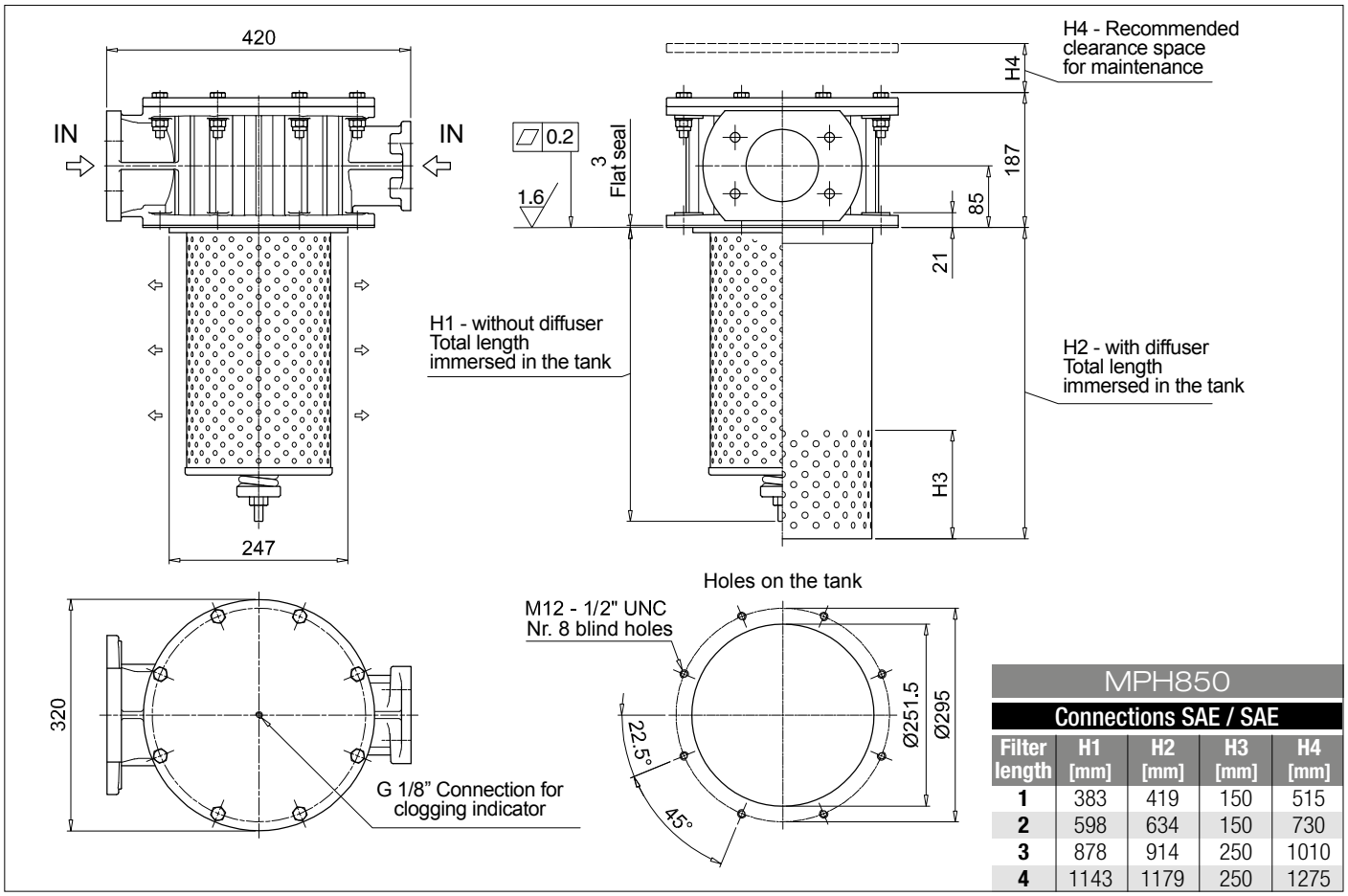

MPH850				
Connections SAE / SAE				
Filter length	**H1 [mm]**	**H2 [mm]**	**H3 [mm]**	**H4 [mm]**
1	383	419	150	515
2	598	634	150	730
3	878	914	250	1010
4	1143	1179	250	1275

MPH SPARE PARTS

Order number for spare parts

MPH 110 - 114

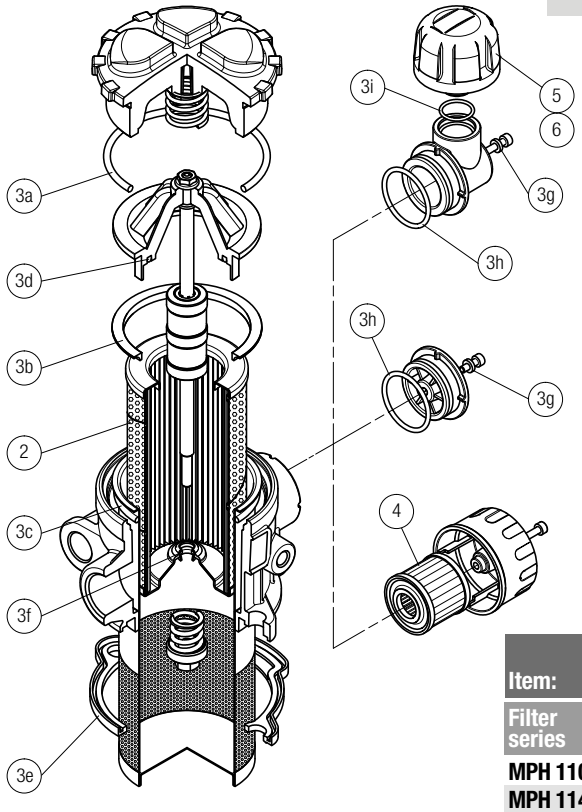

Item:	2	3 (3a ÷ 3i)		4	5	6
	Q.ty: 1 pc.	Q.ty: 1 pc.		Q.ty: 1 pc.	Q.ty: 1 pc.	Q.ty: 1 pc.
Filter series	**Filter element**	**Seal Kit code number**		**Air breather filter element - version:**		
		NBR	**FPM**	**C**	**D**	**P**
MPH 110	See order table	02050565	02050566	10 µm A3L03	10 µm SAP50G3L03A0P01	10 µm SAP50G3L03A1P01
MPH 114		02050582	02050583			

MPH 116

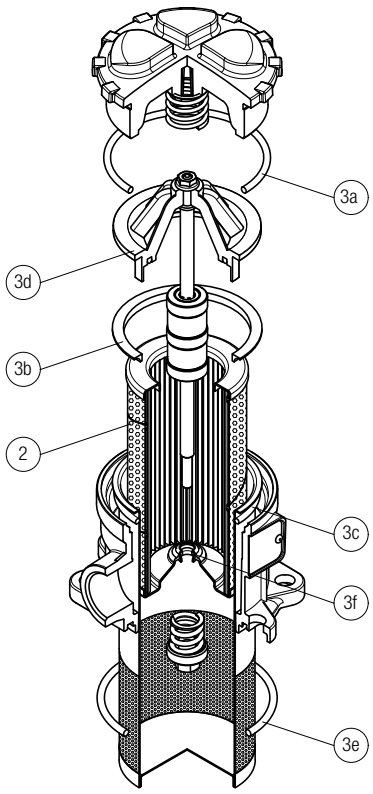

Item:	2	3 (3a ÷ 3f)	
	Q.ty: 1 pc.	Q.ty: 1 pc.	
Filter series	**Filter element**	**Seal Kit code number**	
		NBR	**FPM**
MPH 116	See order table	02050741	02050742

MPH 120

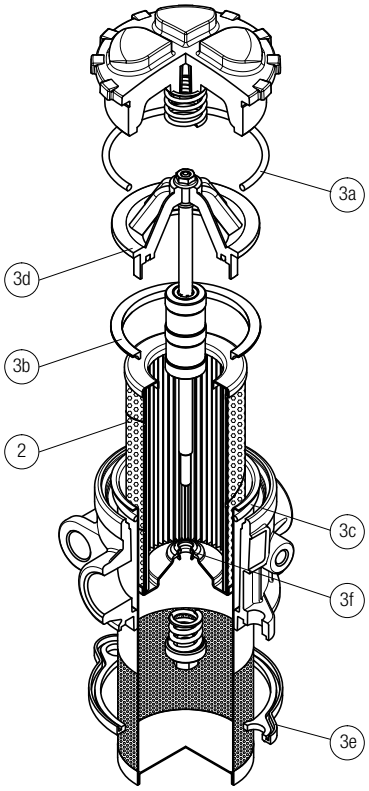

Item:	2	3 (3a ÷ 3f)	
	Q.ty: 1 pc.	Q.ty: 1 pc.	
Filter series	**Filter element**	**Seal Kit code number**	
		NBR	**FPM**
MPH 120	See order table	02050567	02050568

Order number for spare parts

MPH 250 - 630

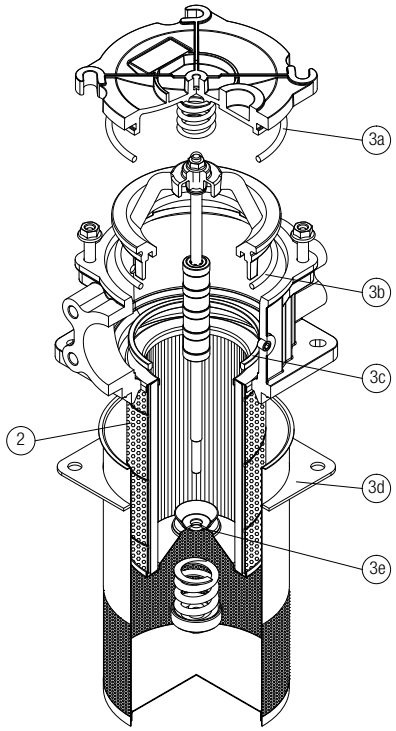

Item:	Q.ty: 1 pc. 2	Q.ty: 1 pc. 3 (3a ÷ 3e)	
Filter series	Filter element	Seal Kit code number NBR	FPM
MPH 250	See order table	02050151	02050152
MPH 630		02050153	02050154

MPH 660

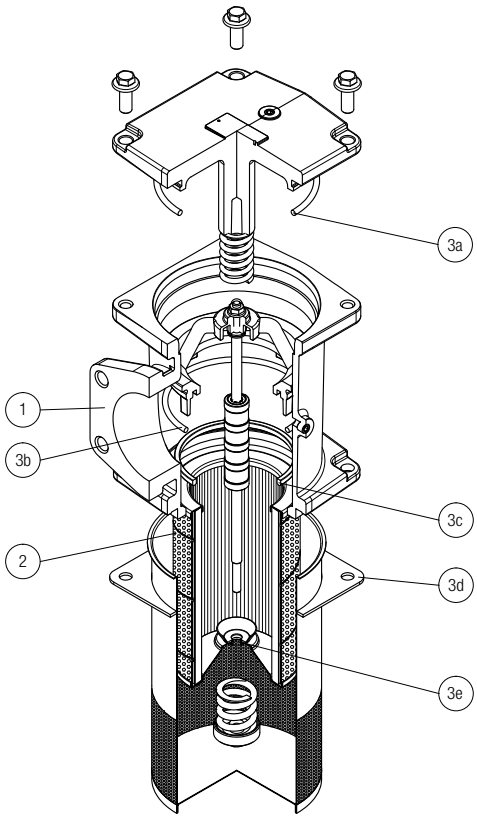

MPH 850

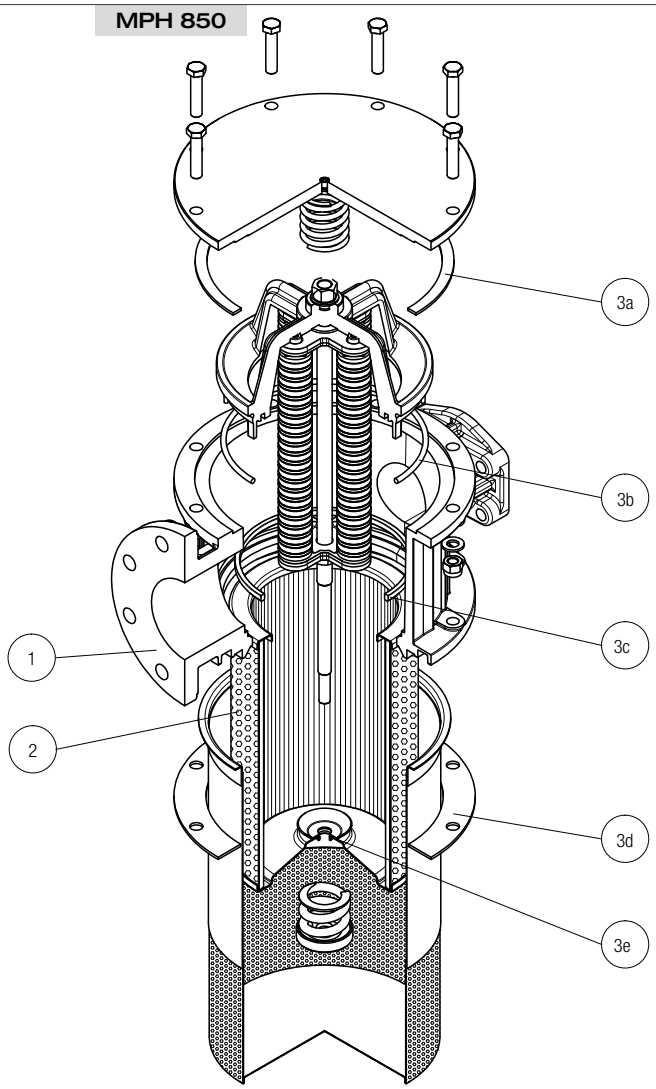

Item:	Q.ty: 1 pc. 2	Q.ty: 1 pc. 3 (3a ÷ 3e)	
Filter series	Filter element	Seal Kit code number NBR	FPM
MPH 660	See order table	02050153	02050154
MPH 850		02050155	02050156

MPI series

Maximum working pressure up to 1 MPa (10 bar) - Flow rate up to 3500 l/min

MPI GENERAL INFORMATION

Description

Return filter

Maximum working pressure up to 1 MPa (10 bar)
Flow rate up to 3500 l/min

MPI is a range of return filter kits for protection of the reservoir against the system contamination.
They are directly integrated in the reservoir in immersed or semi-immersed position to save space into the tank.
The use of the diffuser is recommended, to place the filter output always immersed into the fluid to avoid aeration or foam generation into the reservoir.
The filtration from inside to outside allows a cleaner filter element replacement, the dirty remains into the filter element.

Available features:
- Fine filtration rating, to get a good cleanliness level into the reservoir
- Bypass valve, to relieve excessive pressure drop across the filter media
- Magnetic filter, to hold the ferrous particles
- Oil dipstick, to easily check the level of the fluid into the reservoir (separate item)
- Diffuser, to reduce the risk of aeration, foaming and noise

Common applications:
Heavy duty industrial equipment

Technical data

Filter housing materials
- Insert assembly
  Polyamide, GF reinforced: MPI 100
  Aluminium: MPI 250-630-850

- Diffuser: Tinned Steel

- Valve: Steel

Bypass valve
- Opening pressure 175 kPa (1.75 bar) ±10%
- Opening pressure 250 kPa (2.5 bar) ±10%, except for MPI 850

Δp element type
- Microfibre filter elements - series MR: 10 bar
- Fluid flow through the filter element from IN to OUT

Seals
- Standard NBR series A
- Optional FPM series V

Temperature
From -25 °C to +110 °C

Note
MPI filters are provided for vertical mounting

Weights [kg] and volumes [dm³]

Filter series	Weights [kg]						Volumes [dm³]					
	Length	1	2	3	4	5	Length	1	2	3	4	5
MPI 100		0.90	1.00	1.20	1.50	1.80		0.90	0.90	1.20	1.60	1.80
MPI 250		2.20	2.50	2.90	4.30	-		3.50	3.50	4.50	7.00	-
MPI 630		3.40	3.90	4.30	5.40	6.60		5.80	7.40	9.50	11.40	13.50
MPI 850		15.20	18.20	21.20	25.20	-		8.80	12.20	16.70	20.80	-

FILTER ASSEMBLY SIZING
Flow rates [l/min]

Filters series	Length	A03	A06	A10	A16	A25	M25 M60 M90	P10	P25
MPI 100	1	26	29	72	79	107	282	164	190
	2	43	46	112	114	161	318	164	190
	3	64	72	132	156	178	324	219	251
	4	90	99	184	198	216	324	266	302
	5	117	128	201	219	244	324	282	318
MPI 250	1	93	102	210	251	315	1093	339	383
	2	124	151	327	412	421	1122	460	514
	3	189	221	418	445	500	1137	544	616
	4	261	304	592	670	766	1166	832	923
MPI 630	1	160	200	369	423	518	1894	565	632
	2	240	257	571	611	1045	1929	1137	1285
	3	330	374	745	788	1308	1938	1416	1577
	4	374	403	887	1010	1348	1956	1448	1612
	5	625	698	1210	1257	1723	2121	1839	1929
MPI 850	1	775	1041	1246	1568	2242	3311	2371	2625
	2	1176	1522	1682	1747	2449	3378	2684	2886
	3	1490	1914	1995	2014	3035	3405	3144	3220
	4	1668	2088	2305	2363	3169	3517	3272	3378

Maximum flow rate for a complete return filter with a pressure drop Δp = 0.5 bar.
The reference fluid has a kinematic viscosity of 30 mm^2/s (cSt) and a density of 0.86 kg/dm^3.
For different pressure drop or fluid viscosity we recommend to use our selection software available on www.mpfiltri.com.
You can also calculate the right size using the formulas present on the FILTER SIZING paragraph at the beginning of the full catalogue or at the beginning of the filter family brochure.
Please, contact our Sales Department for further additional information.

Hydraulic symbol

Filter series	Style 1 connection
MPI 100	•
MPI 250	•
MPI 630	•
MPI 850	•

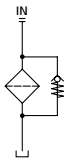

Designation & Ordering code

COMPLETE FILTER

Configuration example 1:	MPI100	1	C	D	A	A10	P01
Configuration example 2:	MPI630	5	E	D	Z	M25	P01

Series and size

- **MPI100**
- **MPI250**
- **MPI630**
- **MPI850**

Length	MPI100	MPI250	MPI630	MPI850
1	•	•	•	•
2	•	•	•	•
3	•	•	•	•
4	•	•	•	•
5	•		•	

Bypass valve	MPI100	MPI250	MPI630	MPI850
S Without	•	•	•	•
C 1.75 bar	•	•	•	•
E 2.5 bar	•	•	•	

Diffuser and magnetic filter

- **D** With diffuser, with magnetic filter
- **F** With diffuser, without magnetic filter
- **O** Without diffuser, with magnetic filter
- **E** Without diffuser, without magnetic filter

Seals and treatments	Filtration rating Axx	Mxx	Pxx
A NBR	•	•	•
V FPM	•	•	•
W NBR head anodized (filter element compatible with fluids HFA-HFB-HFC)	•	•	
Z FPM head anodized (filter element compatible with fluids HFA-HFB-HFC)	•	•	

Filtration rating (filter media)

A03	Inorganic microfiber 3 µm	**M25**	Wire mesh 25 µm
A06	Inorganic microfiber 6 µm	**M60**	Wire mesh 60 µm
A10	Inorganic microfiber 10 µm	**M90**	Wire mesh 90 µm
A16	Inorganic microfiber 16 µm	**P10**	Resin impregnated paper 10 µm
A25	Inorganic microfiber 25 µm	**P25**	Resin impregnated paper 25 µm

Execution

- **P01** MP Filtri standard
- **Pxx** Customized

FILTER ELEMENT

Configuration example 1:	MR100	1	A10	A	P01
Configuration example 2:	MR630	5	M25	V	P01

Element series and size

- **MR100**
- **MR250**
- **MR630**
- **MR850**

Element length	Size 100	Size 250	Size 630	Size 850
1	•	•	•	•
2	•	•	•	•
3	•	•	•	•
4	•	•	•	•
5	•		•	

Filtration rating (filter media)

A03	Inorganic microfiber 3 µm	**M25**	Wire mesh 25 µm
A06	Inorganic microfiber 6 µm	**M60**	Wire mesh 60 µm
A10	Inorganic microfiber 10 µm	**M90**	Wire mesh 90 µm
A16	Inorganic microfiber 16 µm	**P10**	Resin impregnated paper 10 µm
A25	Inorganic microfiber 25 µm	**P25**	Resin impregnated paper 25 µm

Seals

- **A** NBR
- **V** FPM

Execution

- **P01** MP Filtri standard
- **Pxx** Customized

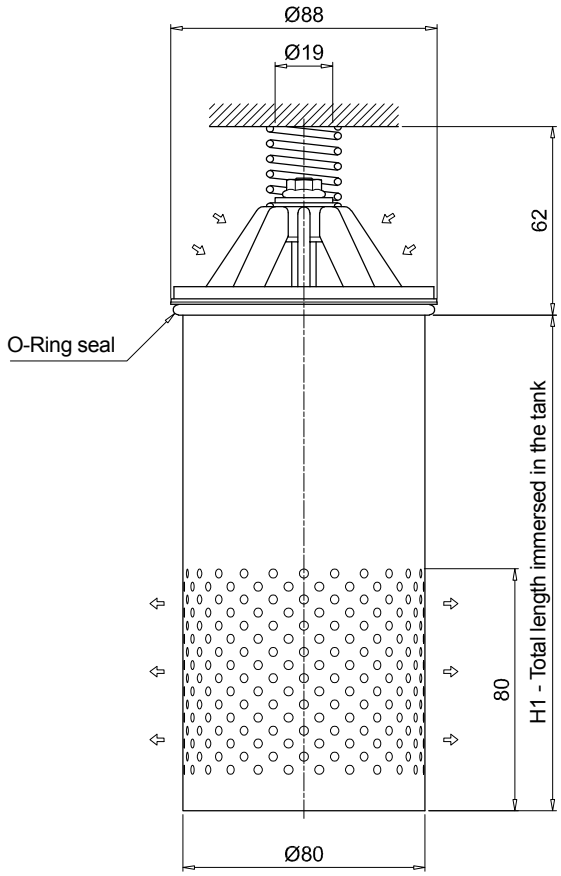

MPI100 with diffuser	
Filter length	H1 [mm]
1	198
2	198
3	248
4	348
5	448

Filter seat

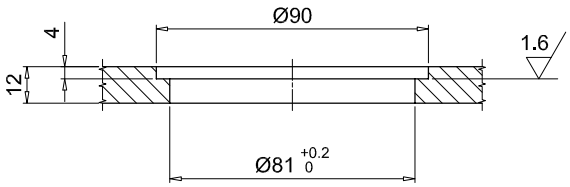

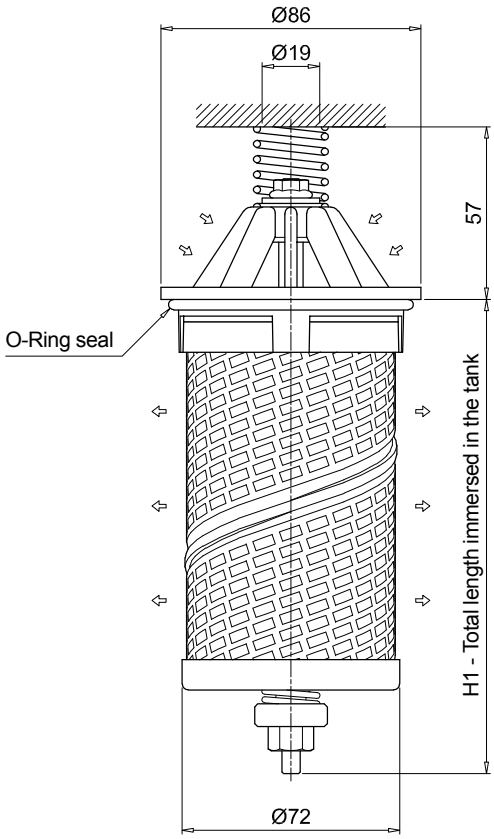

MPI100 without diffuser	
Filter length	H1 [mm]
1	141
2	185
3	235
4	335
5	435

Filter seat

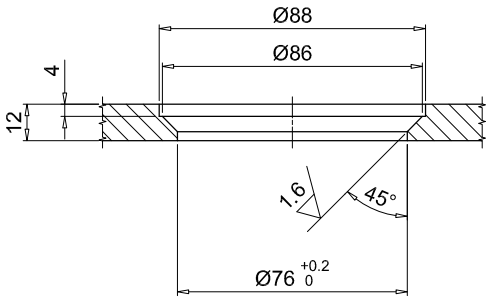

Dimensions

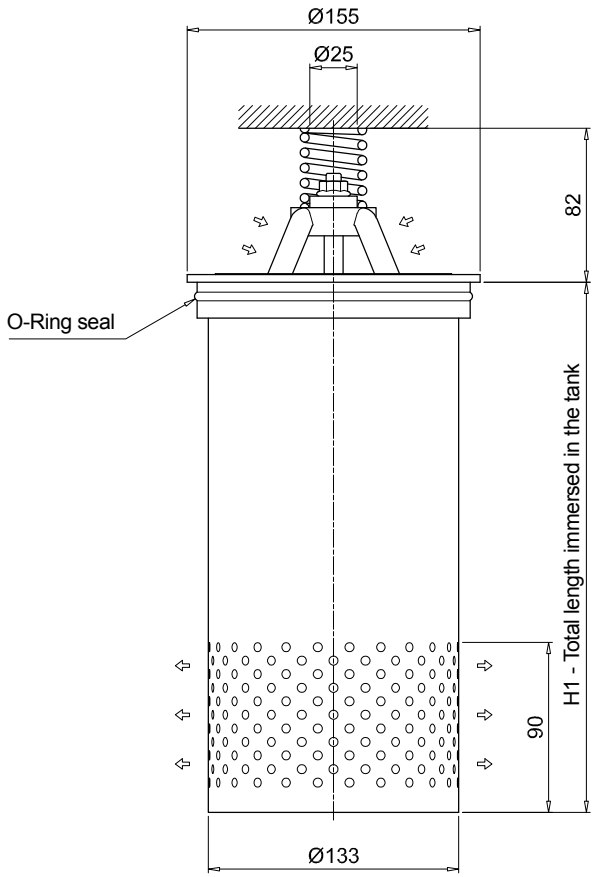

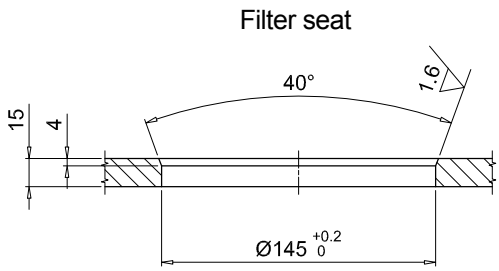

MPI250 with diffuser	
Filter length	H1 [mm]
1	266
2	266
3	336
4	524

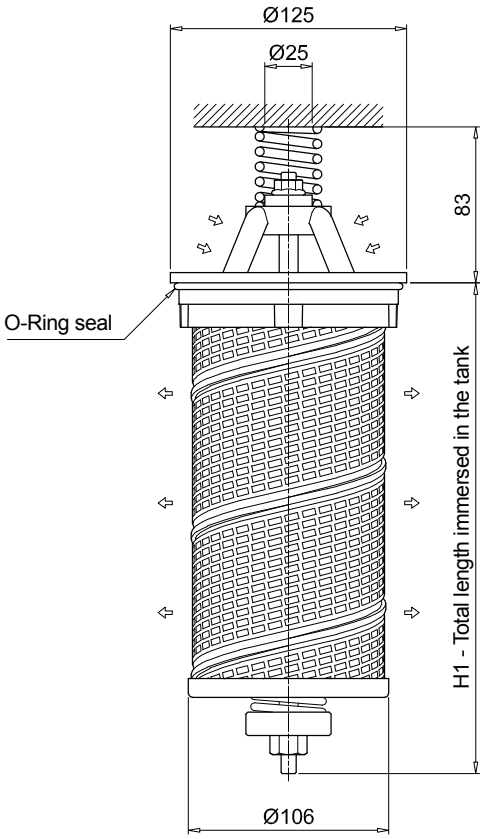

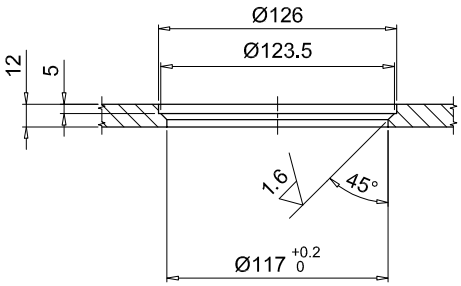

MPI250 without diffuser	
Filter length	H1 [mm]
1	193
2	243
3	313
4	516

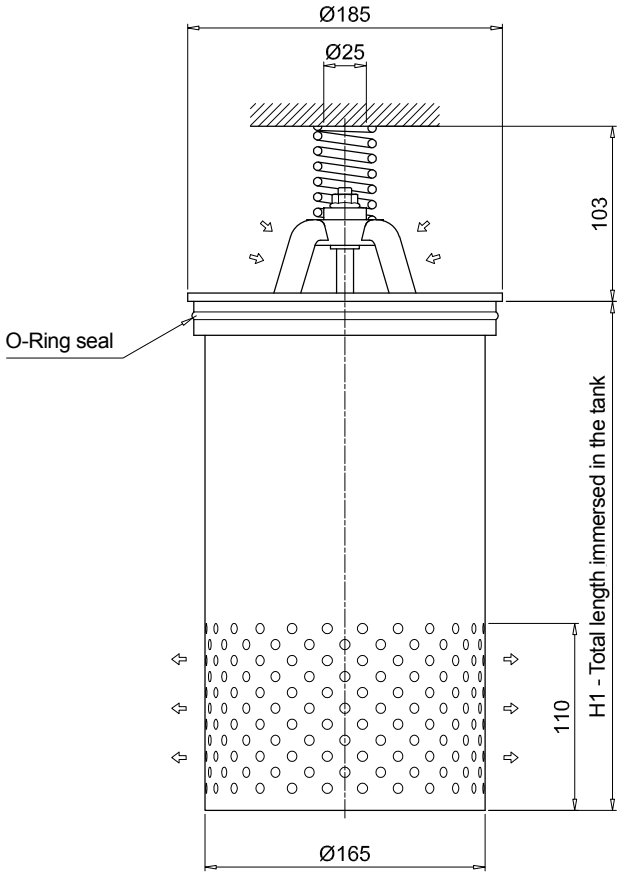

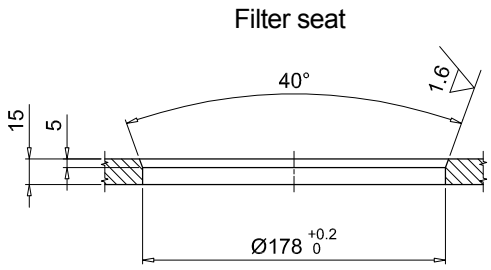

MPI630 with diffuser	
Filter length	H1 [mm]
1	298
2	378
3	478
4	568
5	868

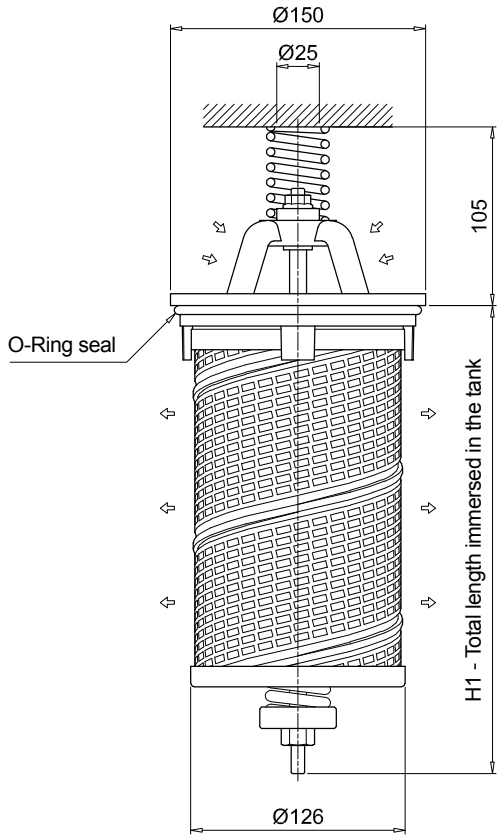

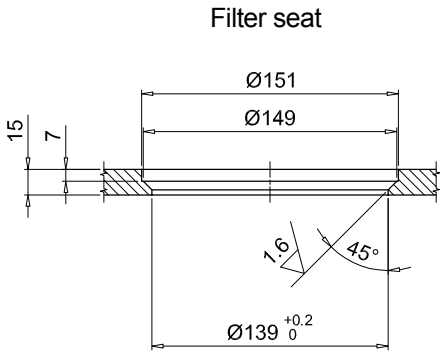

MPI630 without diffuser	
Filter length	H1 [mm]
1	275
2	355
3	455
4	540
5	841

Dimensions

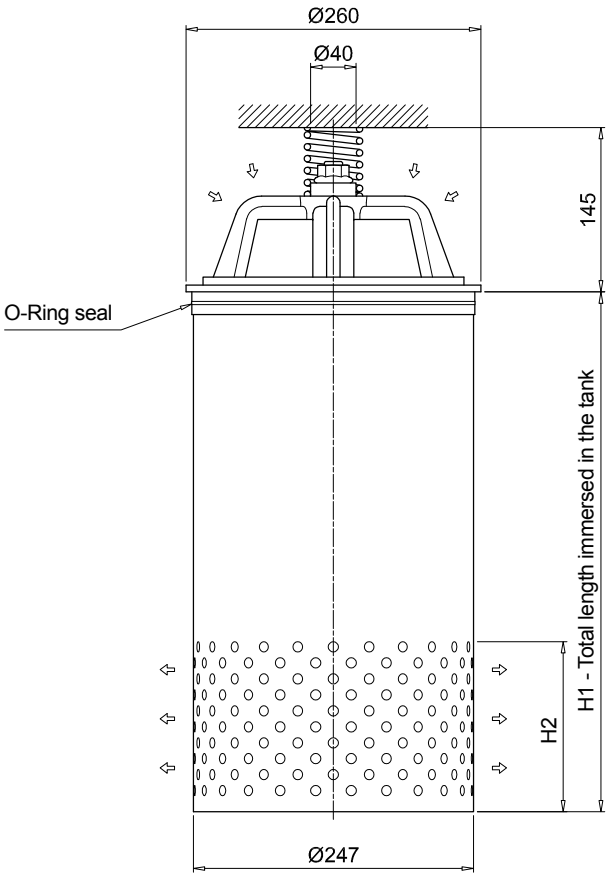

MPI850 with diffuser		
Filter length	H1 [mm]	H2 [mm]
1	427	150
2	642	150
3	922	250
4	1187	250

Filter seat

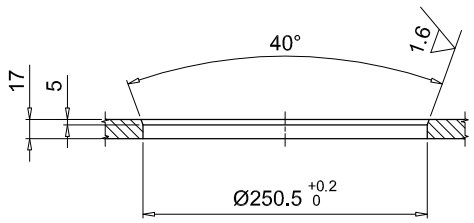

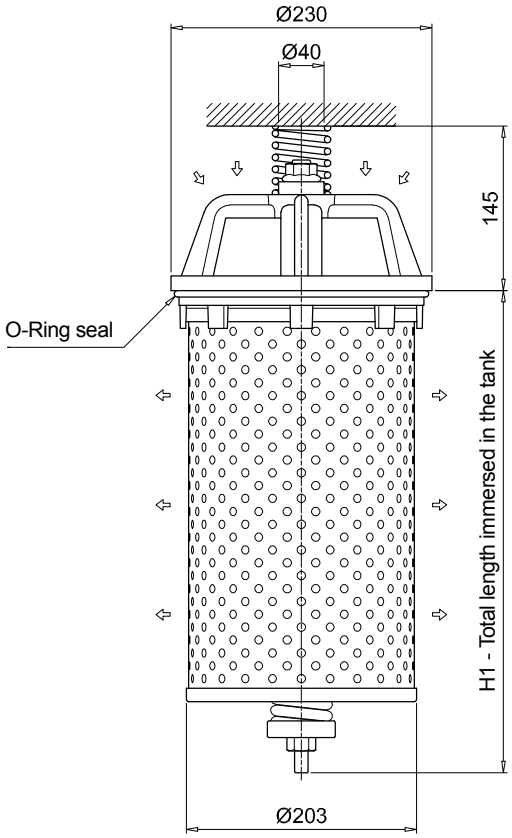

MPI850 without diffuser	
Filter length	H1 [mm]
1	405
2	620
3	900
4	1165

Filter seat

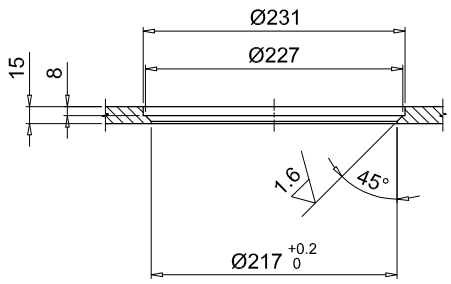

Order number for spare parts

MPI 100

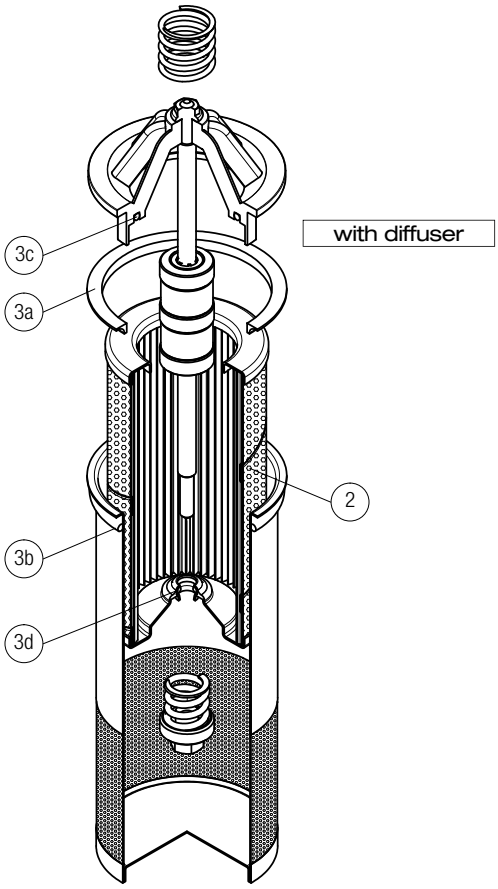

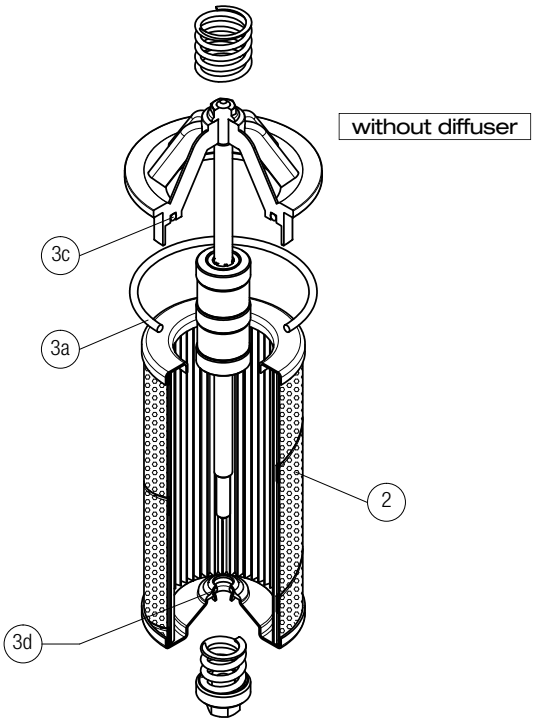

Item:	Q.ty: 1 pc. 2	Q.ty: 1 pc. 3 (3a ÷ 3d)	
Filter series	**Filter element**	**Seal Kit code number NBR**	**FPM**
MPI 100	See order table	02050145	02050146

MPI 250 - 630

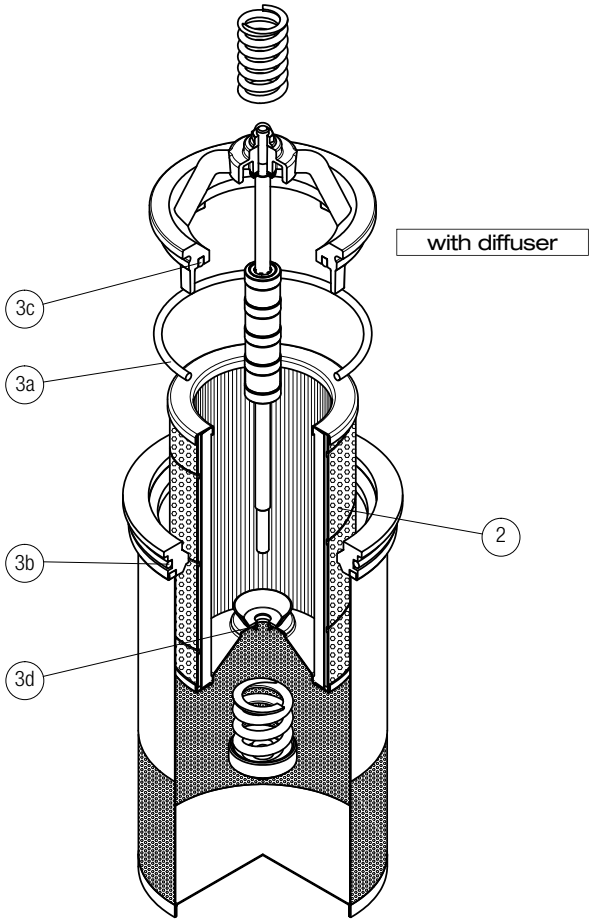

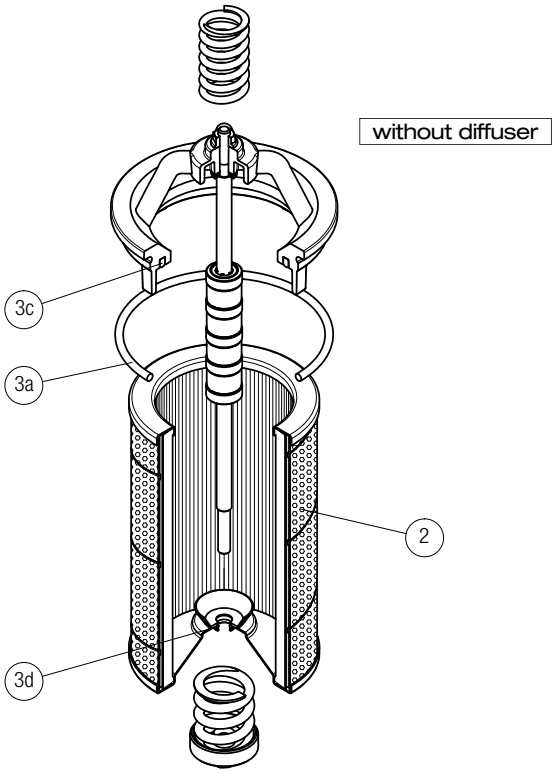

Item:	Q.ty: 1 pc. 2	Q.ty: 1 pc. 3 (3a ÷ 3d)	
Filter series	**Filter element**	**Seal Kit code number NBR**	**FPM**
MPI 250	See order table	02050147	02050148
MPI 630		02050112	02050113

Order number for spare parts

MPI 850

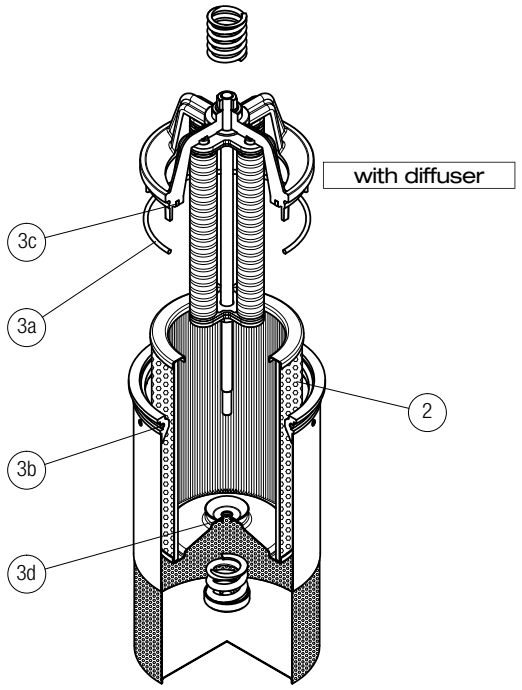

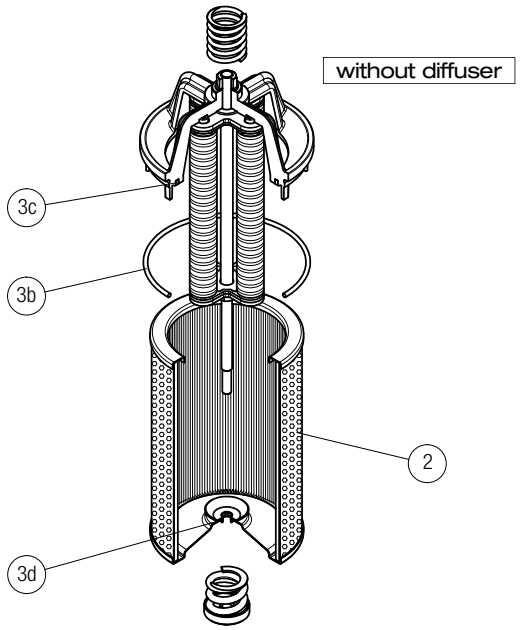

Item:	Q.ty: 1 pc. 2	Q.ty: 1 pc. 3 (3a ÷ 3d)	
Filter series	Filter element	Seal Kit code number NBR	FPM
MPI 850	See order table	02050114	02050115

FRI series

Maximum working pressure up to 2 MPa (20 bar) - Flow rate up to 2500 l/min

FRI GENERAL INFORMATION

Description

Return filter

Maximum working pressure up to 2 MPa (20 bar)
Flow rate up to 2500 l/min

FRI is a range of return filters for protection of the reservoir against the system contamination.
They could be directly fixed to the reservoir in immersed or semi-immersed position or connected to the lines of the system through the hydraulic fittings.
The filter output must be always immersed into the fluid to avoid aeration or foam generation into the reservoir.

Available features:
- Female threaded connections up to 2 1/2" and flanged connections up to 3 1/2", for a maximum flow rate of 1500 l/min
- Double input connections, to connect several return lines or drains
- Fine filtration rating, to get a good cleanliness level into the reservoir
- Bypass valve, to relieve excessive pressure drop across the filter media
- Visual, electrical and electronic differential clogging indicators

Common applications:
Heavy duty industrial equipment

Technical data

Filter housing materials
- Filter body
  Aluminium: FRI 255
  Anodized Aluminium: FRI 025-040-100-250-630
  Phosphatized Steel: FRI 850

- Cover
  Polyamide, GF reinforced: FRI 255
  Anodized Aluminium: FRI 025-040-100-250-630-850

- Valve: Polyamide, GF reinforced - Steel

Bypass valve
Opening pressure 240 kPa (2.4 bar) ±10%

Δp element type
- Microfibre filter elements - series N: 10 bar
- Fluid flow through the filter element from OUT to IN

Seals
- Standard NBR series A
- Optional FPM series V

Temperature
From -25 °C to +110 °C

Note
FRI filters are provided for vertical mounting

Weights [kg] and volumes [dm³]

Filter series	Weights [kg]	Volumes [dm³]
	Length 1	Length 1
FRI 025	1.0	0.28
FRI 040	2.0	0.70
FRI 100	3.8	1.09
FRI 250	6.3	2.60
FRI 255	4.2	3.20
FRI 630	13.8	7.05
FRI 850	48.0	21.50

FILTER ASSEMBLY SIZING
Flow rates [l/min]

		Filter element design - N Series							
Filter series	Length	A03	A06	A10	A16	A25	M25 M60 M90	P10	P25
FRI 025	**1**	6	10	17	19	43	122	43	47
FRI 040	**1**	19	23	43	45	94	155	94	102
FRI 100	**1**	32	34	89	92	187	260	187	206
FRI 250	**1**	144	179	271	300	448	645	448	490
FRI 255	**1**	144	179	271	300	448	645	448	490
FRI 630	**1**	242	279	508	577	834	1446	834	911
FRI 850	**1**	440	541	971	1143	1705	2528	1705	1880

Maximum flow rate for a complete return filter with a pressure drop Δp = 0.5 bar.
The reference fluid has a kinematic viscosity of 30 mm^2/s (cSt) and a density of 0.86 kg/dm^3.
For different pressure drop or fluid viscosity we recommend to use our selection software available on www.mpfiltri.com.
You can also calculate the right size using the formulas present on the FILTER SIZING paragraph at the beginning of the full catalogue or at the beginning of the filter family brochure.
Please, contact our Sales Department for further additional information.

Hydraulic symbols

Filter series	Style 1 connection + Diff. indic.	Style 2 connections + Diff. indic.
FRI 025		•
FRI 040		•
FRI 100		•
FRI 250		•
FRI 255	•	
FRI 630		•
FRI 850	•	

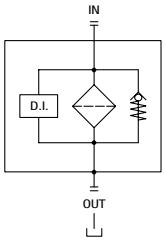

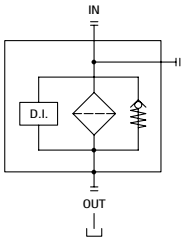

Pressure drop

Filter housings Δp pressure drop

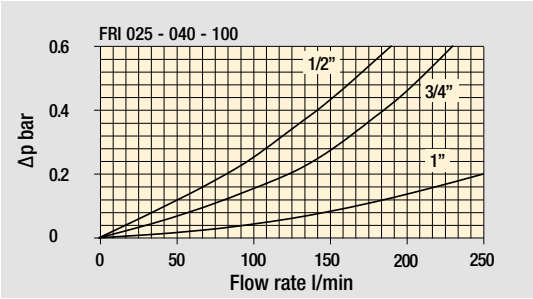

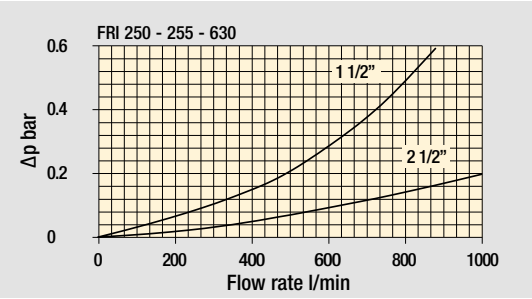

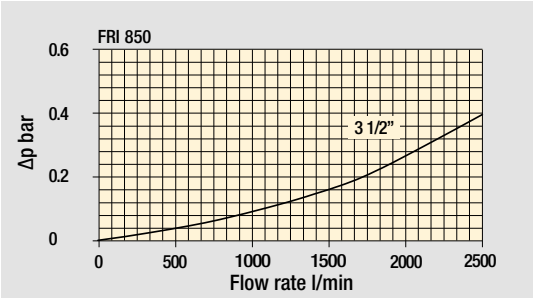

Bypass valve pressure drop

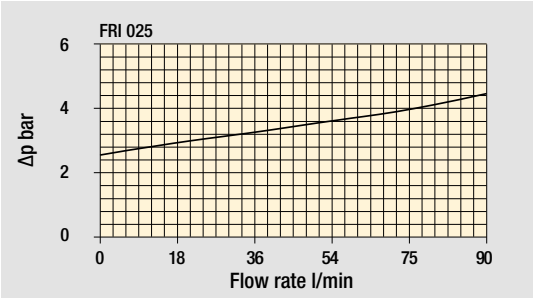

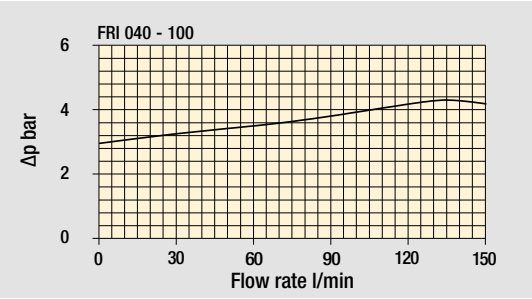

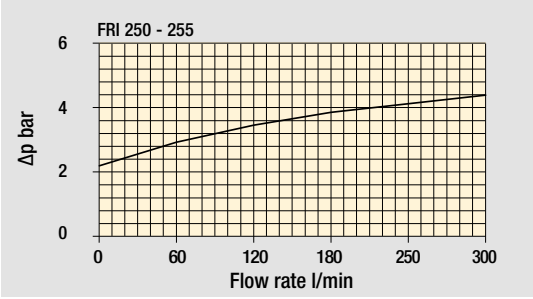

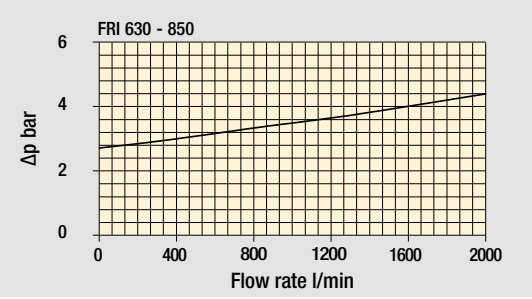

The curves are plotted using mineral oil with density of 0.86 kg/dm^3 in compliance with ISO 3968. Δp varies proportionally with density.

Designation & Ordering code

COMPLETE FILTER

Configuration example 1:	FRI025	B	A	G1	A25	N	P01
Configuration example 2:	FRI040	S	W	G2	M25	N	P01

Series and size

FRI025
FRI040

Bypass valve

B With bypass
S Without bypass

Seals and treatments

		Filtration rating Axx	Mxx	Pxx
A NBR		•	•	•
V FPM		•	•	•
W NBR head anodized	filter element compatible with fluids HFA-HFB-HFC	•	•	
Z FPM head anodized	filter element compatible with fluids HFA-HFB-HFC	•	•	

Connections for FRI025	Connections for FRI040
G1 G 1/2”	G 3/4”
G2 1/2” NPT	3/4” NPT
G3 SAE 8 - 3/4” - 16 UNF	SAE 12 - 1 1/16” - 12 UN

Filtration rating (filter media)

A03 Inorganic microfiber 3 µm	**M25** Wire mesh 25 µm
A06 Inorganic microfiber 6 µm	**M60** Wire mesh 60 µm
A10 Inorganic microfiber 10 µm	**M90** Wire mesh 90 µm
A16 Inorganic microfiber 16 µm	**P10** Resin impregnated paper 10 µm
A25 Inorganic microfiber 25 µm	**P25** Resin impregnated paper 25 µm

Element Δp

N 10 bar

Execution

P01 MP Filtri standard
Pxx Customized

FILTER ELEMENT

Configuration example 1:	CU025	A25	N	P01
Configuration example 2:	CU040	M25	W	P01

Element series and size

CU025
CU040

Filtration rating (filter media)

A03 Inorganic microfiber 3 µm	**M25** Wire mesh 25 µm
A06 Inorganic microfiber 6 µm	**M60** Wire mesh 60 µm
A10 Inorganic microfiber 10 µm	**M90** Wire mesh 90 µm
A16 Inorganic microfiber 16 µm	**P10** Resin impregnated paper 10 µm
A25 Inorganic microfiber 25 µm	**P25** Resin impregnated paper 25 µm

Seals and treatments

		Filtration rating Axx	Mxx	Pxx
N NBR		•	•	•
V FPM		•	•	•
W NBR	filter element compatible with fluids HFA-HFB-HFC	•	•	
Z FPM	filter element compatible with fluids HFA-HFB-HFC	•	•	

Execution

P01 MP Filtri standard
Pxx Customized

ACCESSORIES

Indicators		page
DEA	Electrical differential indicator	242
DEM	Electrical differential indicator	242-243
DLA	Electrical / visual differential indicator	243-244
DLE	Electrical / visual differential indicator	244
DTA	Electronic differential indicator	245
DVA	Visual differential indicator	245
DVM	Visual differential indicator	245

Additional features		page
T2	Plug	246

Dimensions

FRI025

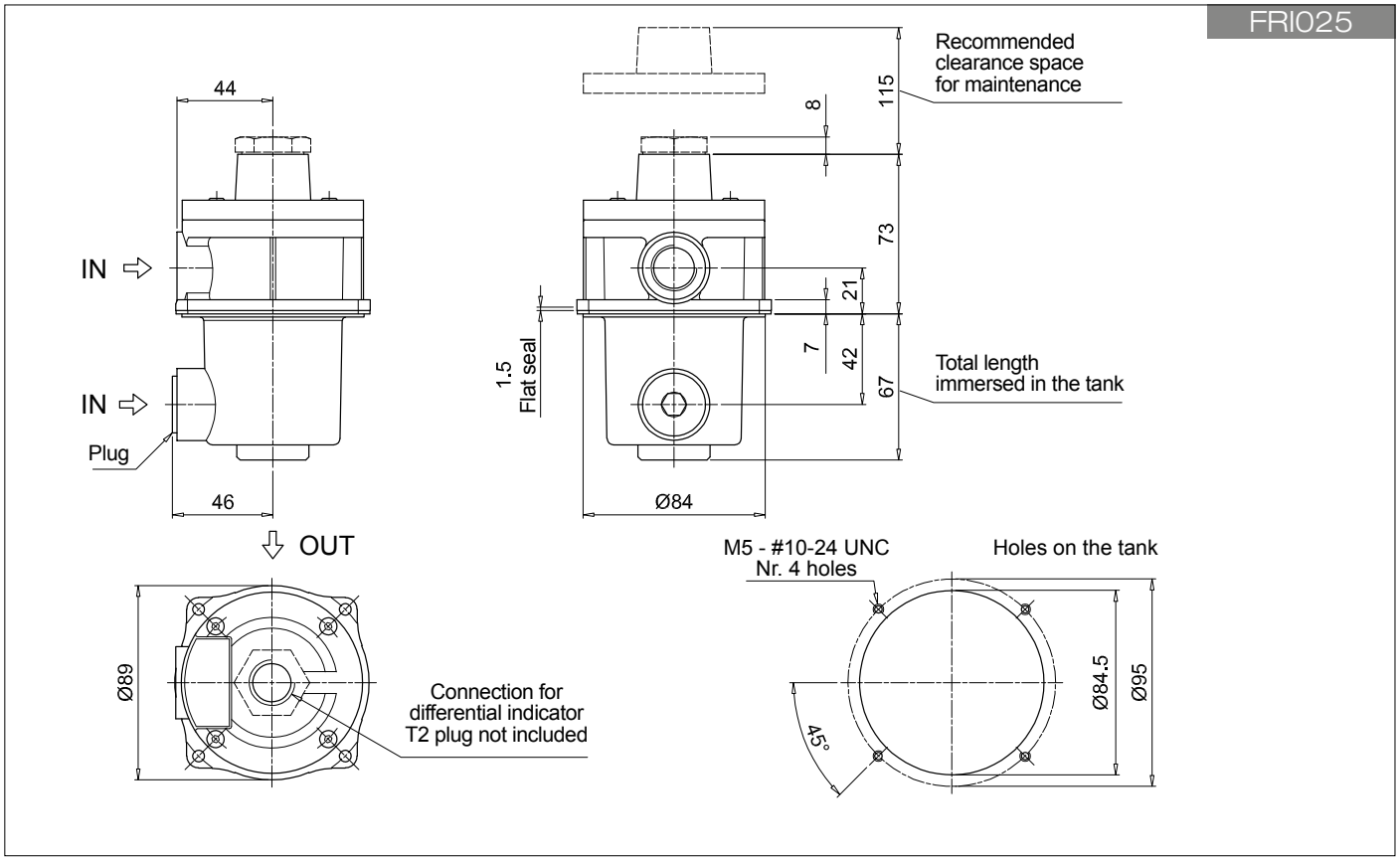

FRI040

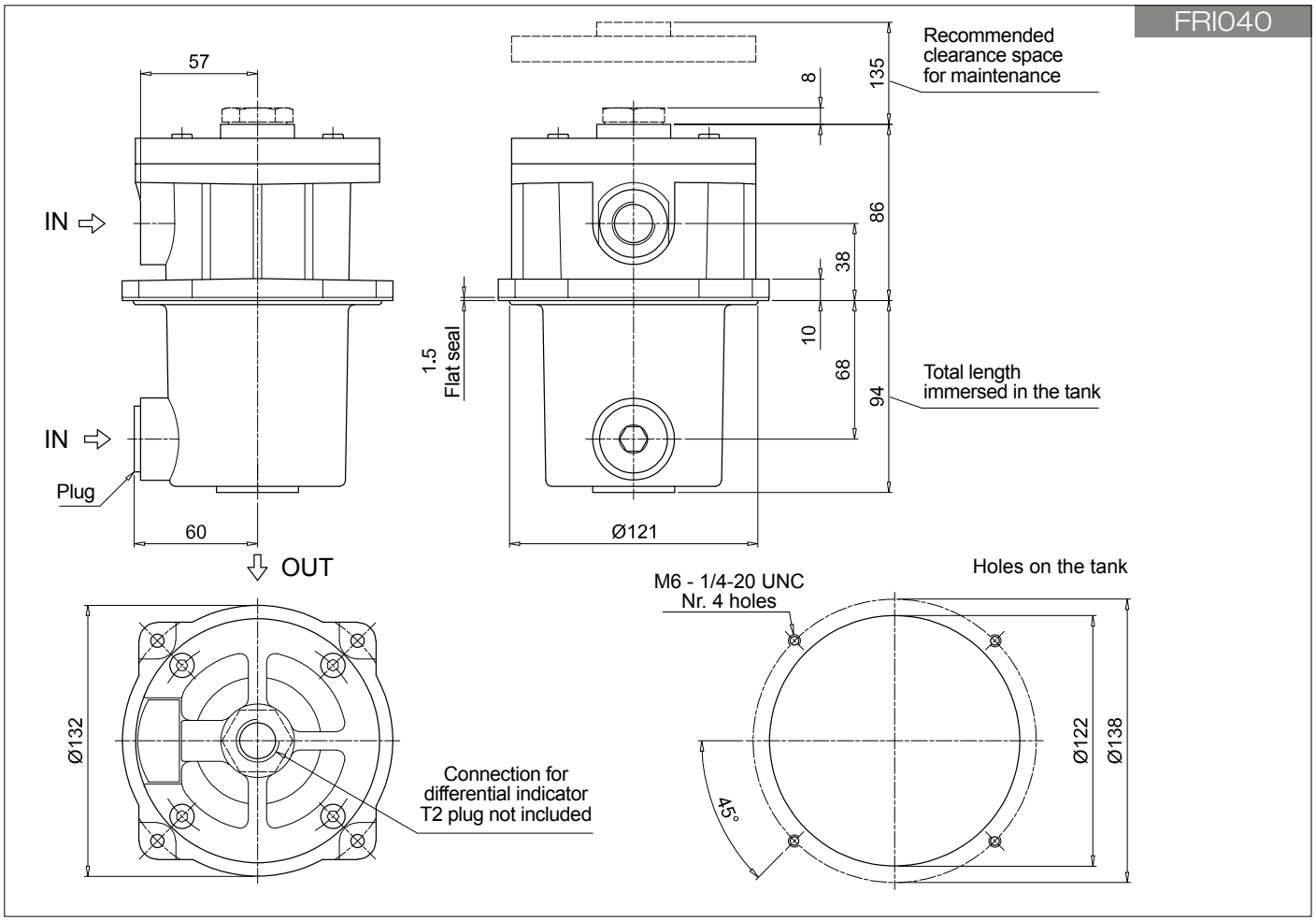

Designation & Ordering code

COMPLETE FILTER

Configuration example 1:	FRI100	B	A	G1	A25	N	P01
Configuration example 2:	FRI630	S	W	F2	M25	N	P01

Series and size

FRI100
FRI250
FRI630

Bypass valve

B With bypass
S Without bypass

Seals and treatments		Filtration rating Axx	Mxx	Pxx
A NBR		•	•	•
V FPM		•	•	•
W NBR head anodized	filter element compatible with fluids HFA-HFB-HFC	•	•	
Z FPM head anodized	filter element compatible with fluids HFA-HFB-HFC	•	•	

Connections for FRI100	Connections for FRI250	Connections for FRI630
G1 G 1”	G 1 1/2”	G 2 1/2”
G2 1” NPT	1 1/2” NPT	2 1/2” NPT
G3 SAE 16 - 1 5/16” - 12 UN	SAE 24 - 1 7/8” - 12 UN	SAE 32 - 2 1/2” - 12 UN
F1 1” SAE 3000 psi/M	1 1/2” SAE 3000 psi/M	2 1/2” SAE 3000 psi/M
F2 1” SAE 3000 psi/UNC	1 1/2” SAE 3000 psi/UNC	2 1/2” SAE 3000 psi/UNC

Filtration rating (filter media)

A03	Inorganic microfiber 3 µm	**M25**	Wire mesh 25 µm
A06	Inorganic microfiber 6 µm	**M60**	Wire mesh 60 µm
A10	Inorganic microfiber 10 µm	**M90**	Wire mesh 90 µm
A16	Inorganic microfiber 16 µm	**P10**	Resin impregnated paper 10 µm
A25	Inorganic microfiber 25 µm	**P25**	Resin impregnated paper 25 µm

Element Δp

N 10 bar

Execution

P01 MP Filtri standard
Pxx Customized

FILTER ELEMENT

Configuration example 1:	CU100	A25	N	P01
Configuration example 2:	CU630	M25	W	P01

Element series and size

CU100
CU250
CU630

Filtration rating (filter media)

A03	Inorganic microfiber 3 µm	**M25**	Wire mesh 25 µm
A06	Inorganic microfiber 6 µm	**M60**	Wire mesh 60 µm
A10	Inorganic microfiber 10 µm	**M90**	Wire mesh 90 µm
A16	Inorganic microfiber 16 µm	**P10**	Resin impregnated paper 10 µm
A25	Inorganic microfiber 25 µm	**P25**	Resin impregnated paper 25 µm

Seals and treatments		Filtration rating Axx	Mxx	Pxx
N NBR		•	•	•
V FPM		•	•	•
W NBR	filter element compatible with fluids HFA-HFB-HFC	•	•	
Z FPM	filter element compatible with fluids HFA-HFB-HFC	•	•	

Execution

P01 MP Filtri standard
Pxx Customized

ACCESSORIES

Indicators		page
DEA	Electrical differential indicator	242
DEM	Electrical differential indicator	242-243
DLA	Electrical / visual differential indicator	243-244
DLE	Electrical / visual differential indicator	244
DTA	Electronic differential indicator	245
DVA	Visual differential indicator	245
DVM	Visual differential indicator	245

Additional features		page
T2	Plug	246

FRI100
Threaded connections "G"

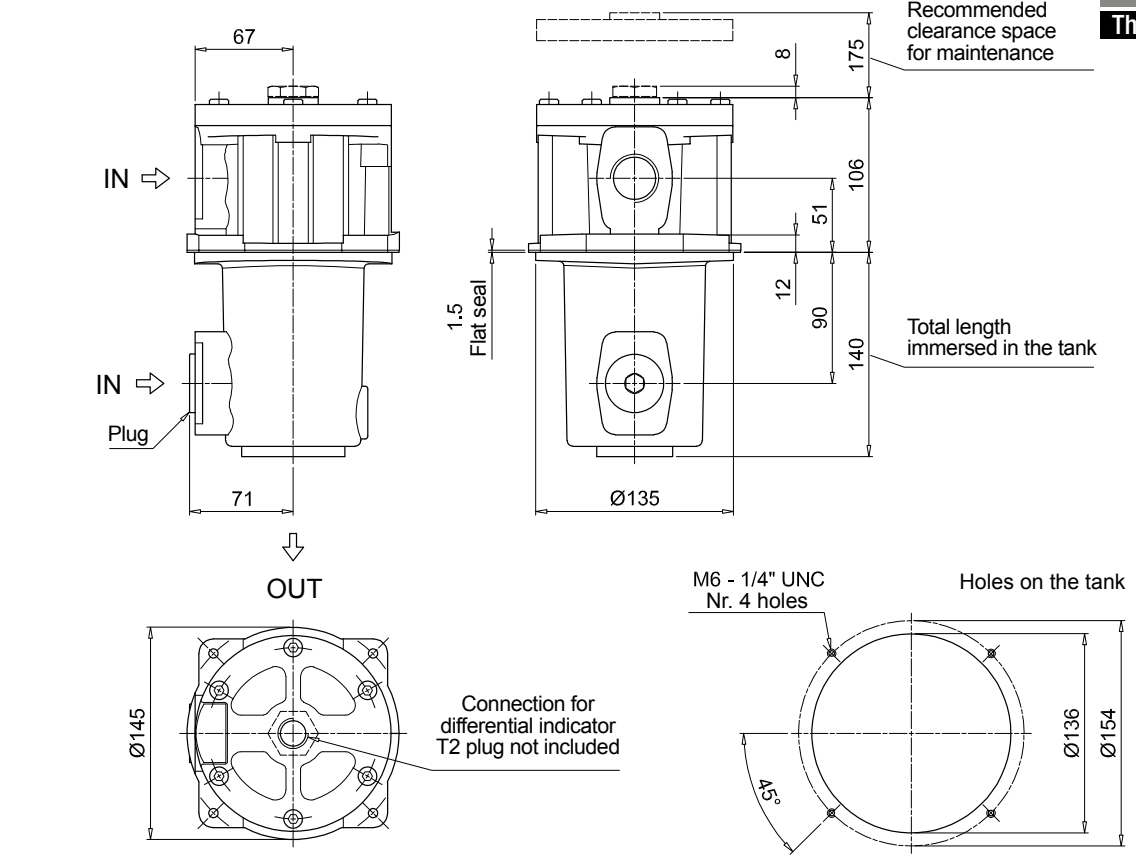

FRI100
Flange connections "F"

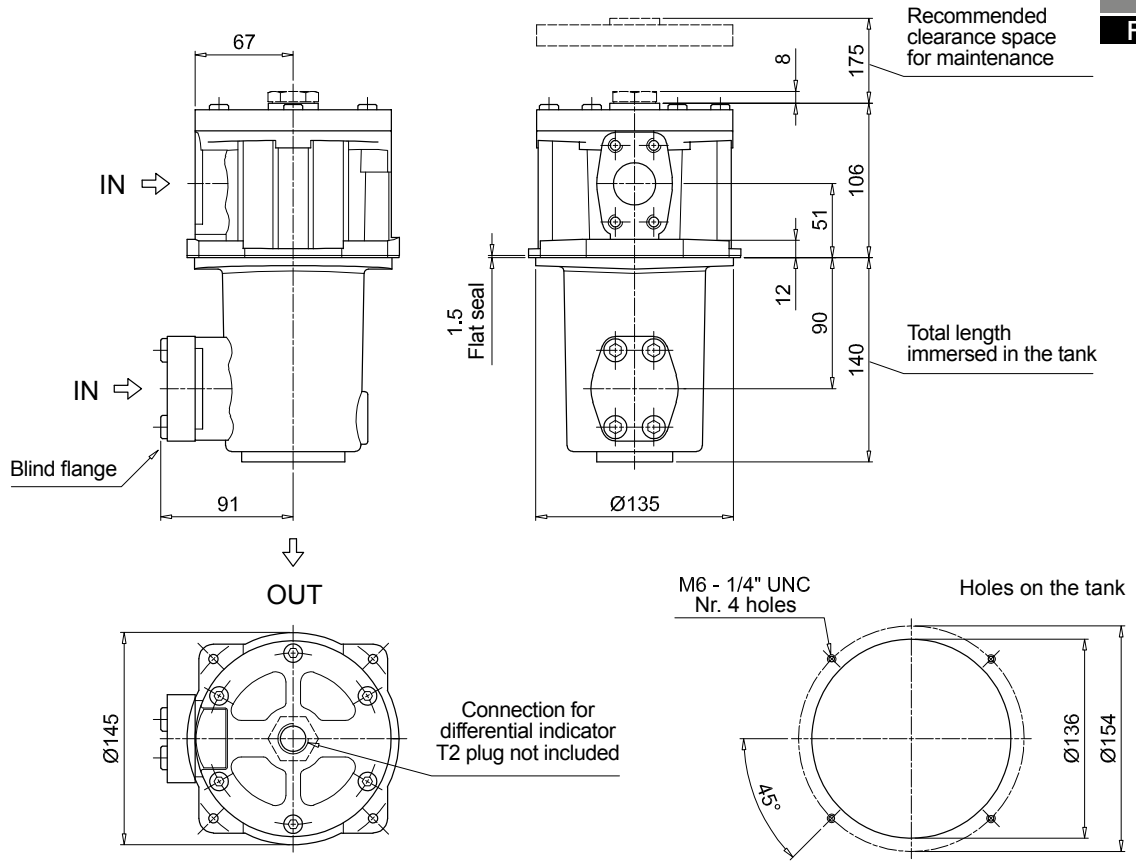

Dimensions

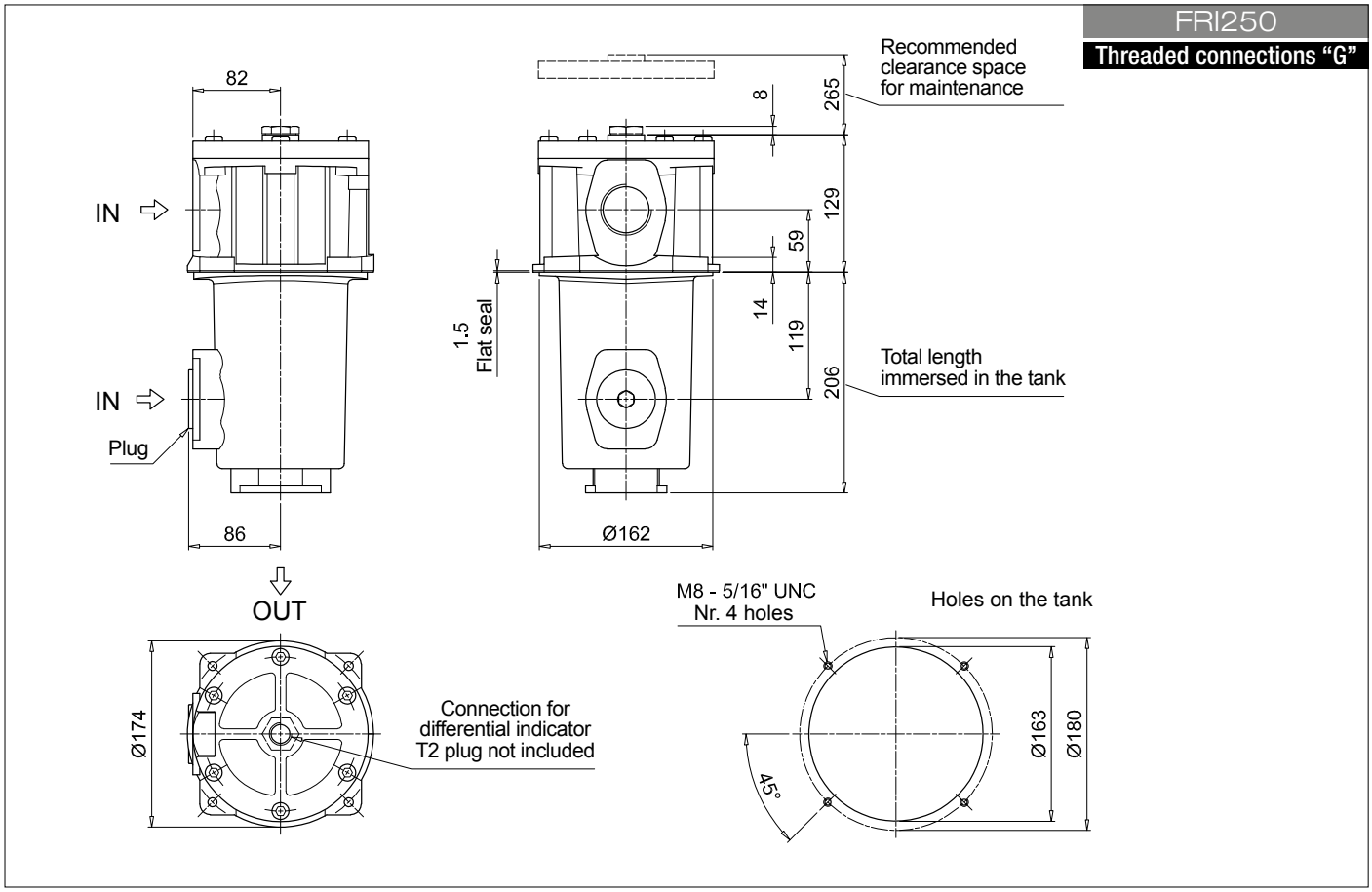
FRI250
Threaded connections "G"
82
IN
IN
Plug
86
OUT
Ø174
Connection for
differential indicator
T2 plug not included
Recommended
clearance space
for maintenance
8
265
129
59
14
119
206
1.5
Flat seal
Total length
immersed in the tank
Ø162
M8 - 5/16" UNC
Nr. 4 holes
Holes on the tank
45°
Ø163
Ø180

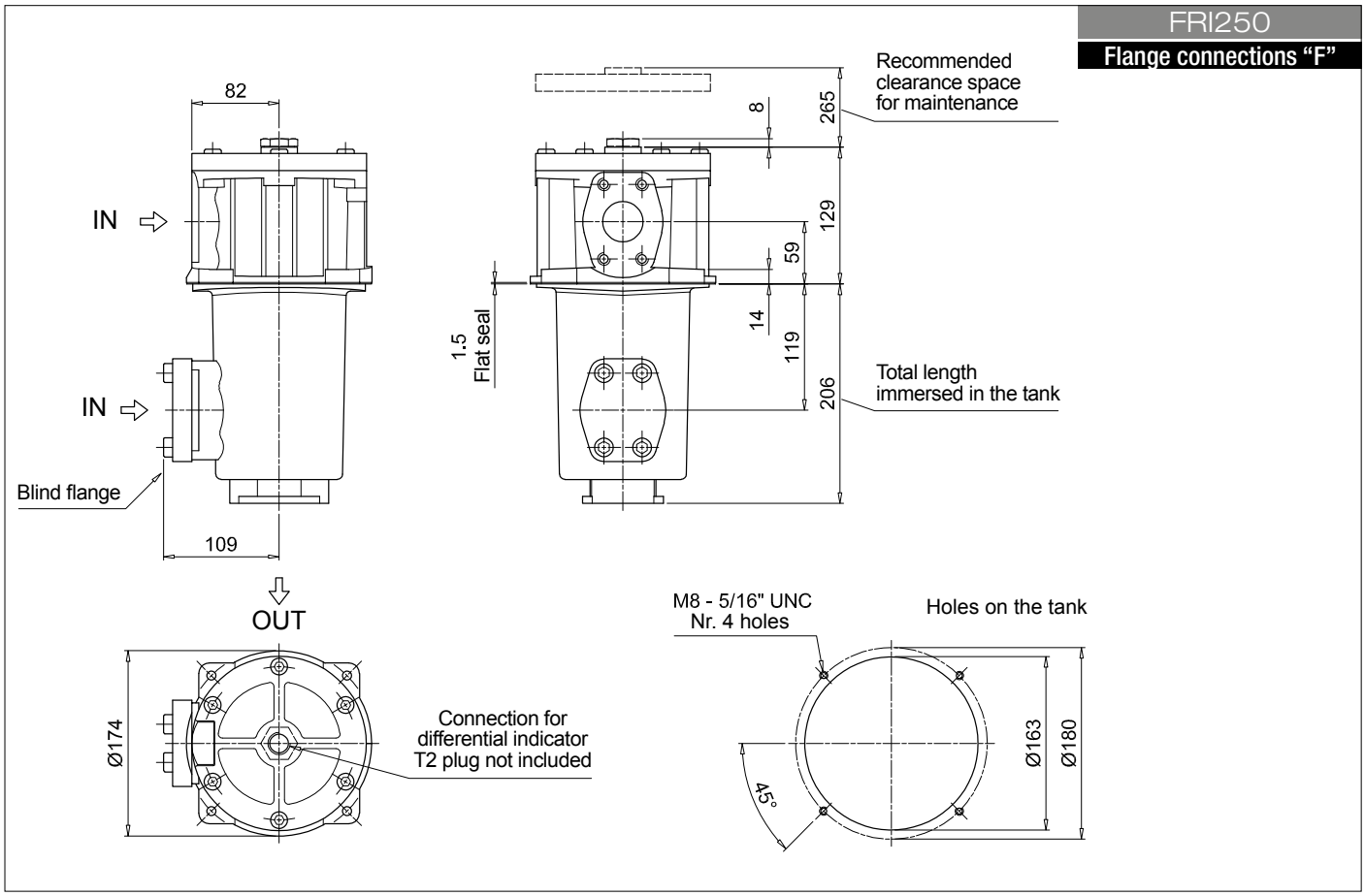
FRI250
Flange connections "F"
82
IN
IN
Blind flange
109
OUT
Ø174
Connection for
differential indicator
T2 plug not included
Recommended
clearance space
for maintenance
8
265
129
59
14
119
206
1.5
Flat seal
Total length
immersed in the tank
M8 - 5/16" UNC
Nr. 4 holes
Holes on the tank
45°
Ø163
Ø180

FRI630
Threaded connections "G"

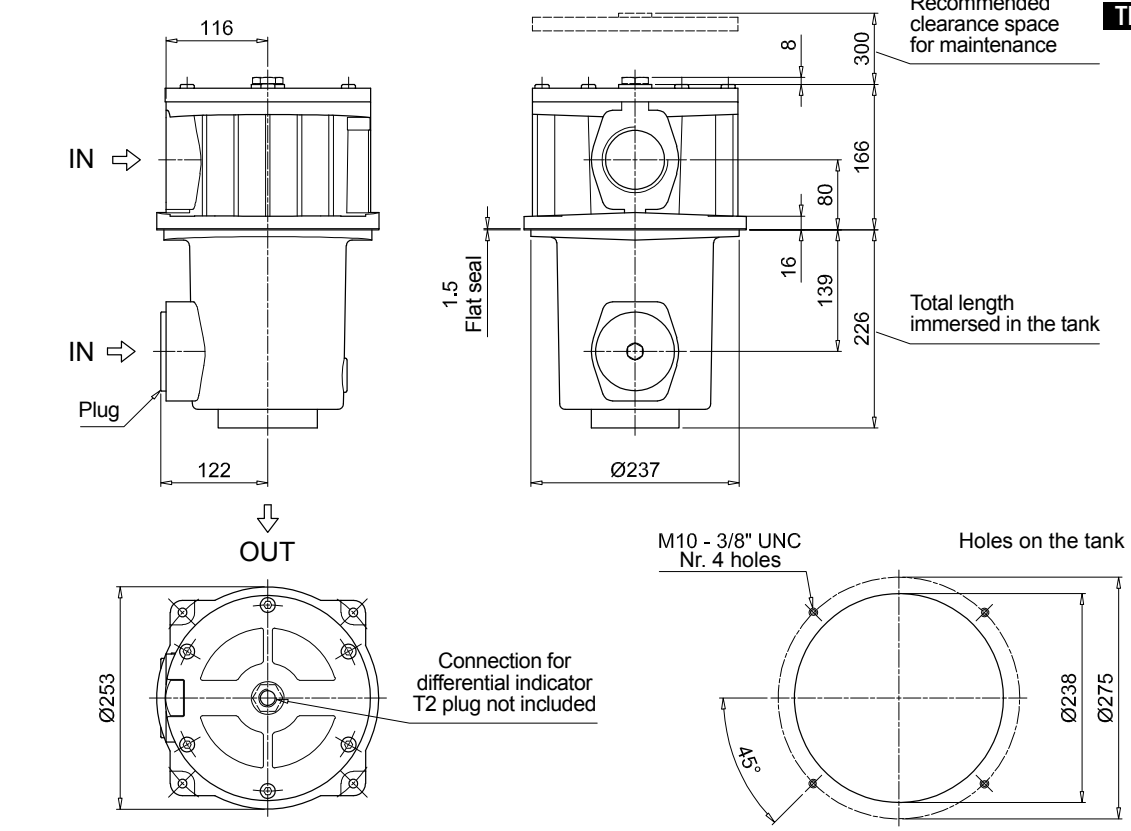

FRI630
Flange connections "F"

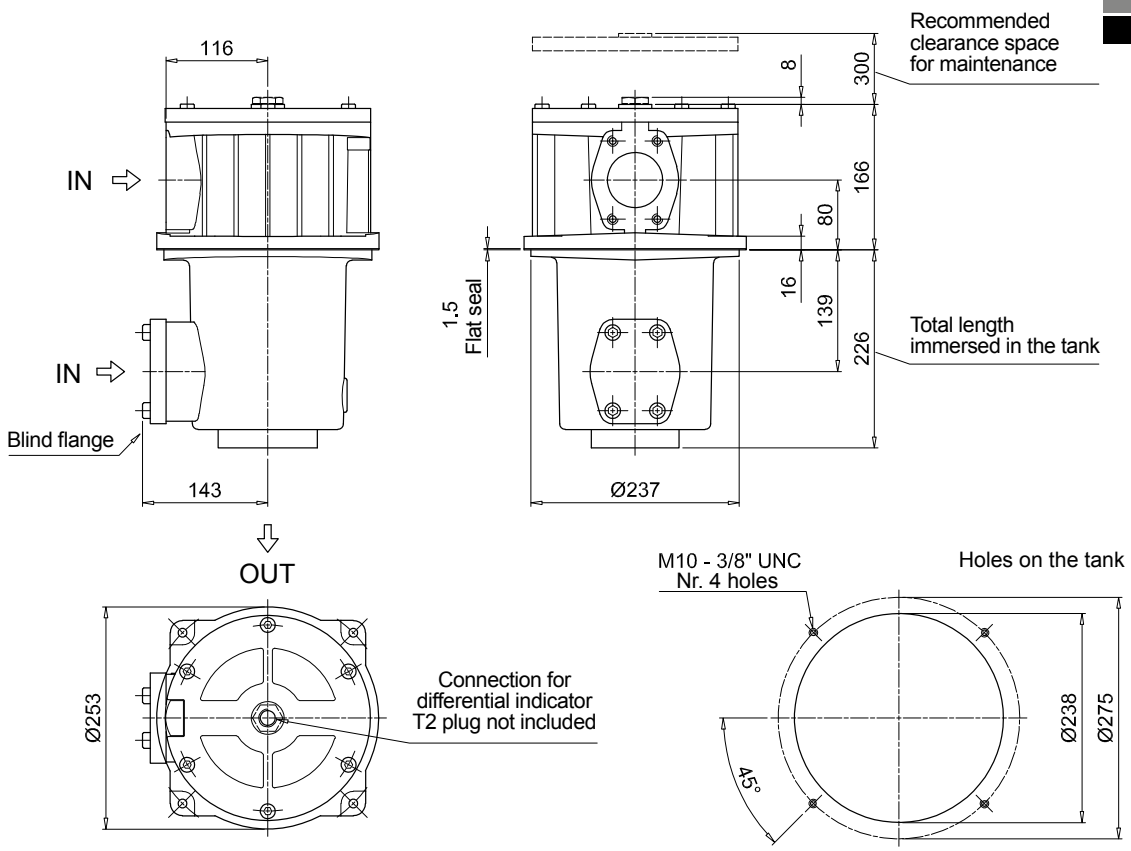

Designation & Ordering code

COMPLETE FILTER

Configuration example 1:	FRI255	S	W	F2	M25	N	P01
Configuration example 2:	FRI850	B	A	F1	A25	N	P01

Series and size

FRI255
FRI850

Bypass valve

B With bypass
S Without bypass

Seals and treatments

		Axx	Mxx	Pxx
A NBR		•	•	•
V FPM		•	•	•
W NBR head anodized	filter element compatible with fluids HFA-HFB-HFC	•	•	
Z FPM head anodized	filter element compatible with fluids HFA-HFB-HFC	•	•	

Filtration rating

Connections for FRI255

G1 G 1 1/2"
G2 1 1/2" NPT
G3 SAE 24 - 1 7/8" - 12 UN
G4 G 1 1/4"
G5 1 1/4" NPT
G6 SAE 20 - 1 5/8" - 12 UN
F1 1 1/2" SAE 3000 psi/M
F2 1 1/2" SAE 3000 psi/UNC

Connections for FRI850

F1 3 1/2" SAE 3000 psi/M
F2 3 1/2" SAE 3000 psi/UNC

Filtration rating (filter media)

A03 Inorganic microfiber 3 µm
A06 Inorganic microfiber 6 µm
A10 Inorganic microfiber 10 µm
A16 Inorganic microfiber 16 µm
A25 Inorganic microfiber 25 µm
M25 Wire mesh 25 µm
M60 Wire mesh 60 µm
M90 Wire mesh 90 µm
P10 Resin impregnated paper 10 µm
P25 Resin impregnated paper 25 µm

Element Δp

N 10 bar

Execution

P01 MP Filtri standard
Pxx Customized

FILTER ELEMENT

Configuration example 1:	CU250	M25	W	P01
Configuration example 2:	CU850	A25	N	P01

Element series and size

CU250
CU850

Filtration rating (filter media)

A03 Inorganic microfiber 3 µm
A06 Inorganic microfiber 6 µm
A10 Inorganic microfiber 10 µm
A16 Inorganic microfiber 16 µm
A25 Inorganic microfiber 25 µm
M25 Wire mesh 25 µm
M60 Wire mesh 60 µm
M90 Wire mesh 90 µm
P10 Resin impregnated paper 10 µm
P25 Resin impregnated paper 25 µm

Seals and treatments

		Axx	Mxx	Pxx
N NBR		•	•	•
V FPM		•	•	•
W NBR	filter element compatible with fluids HFA-HFB-HFC	•	•	
Z FPM	filter element compatible with fluids HFA-HFB-HFC	•	•	

Filtration rating

Execution

P01 MP Filtri standard
Pxx Customized

FRI255 ACCESSORIES

Indicators		page
BVA	Axial pressure gauge	240
BVR	Radial pressure gauge	240
BVP	Visual pressure indicator with automatic reset	241
BVQ	Visual pressure indicator with manual reset	241
BEA	Electrical pressure indicator	239
BEM	Electrical pressure indicator	239
BLA	Electrical / visual pressure indicator	239-240

FRI850 ACCESSORIES

Indicators		page
DEA	Electrical differential indicator	242
DEM	Electrical differential indicator	242-243
DLA	Electrical / visual differential indicator	243-244
DLE	Electrical / visual differential indicator	244
DTA	Electronic differential indicator	245
DVA	Visual differential indicator	245
DVM	Visual differential indicator	245

Additional features		page
T2	Plug	246

FRI255

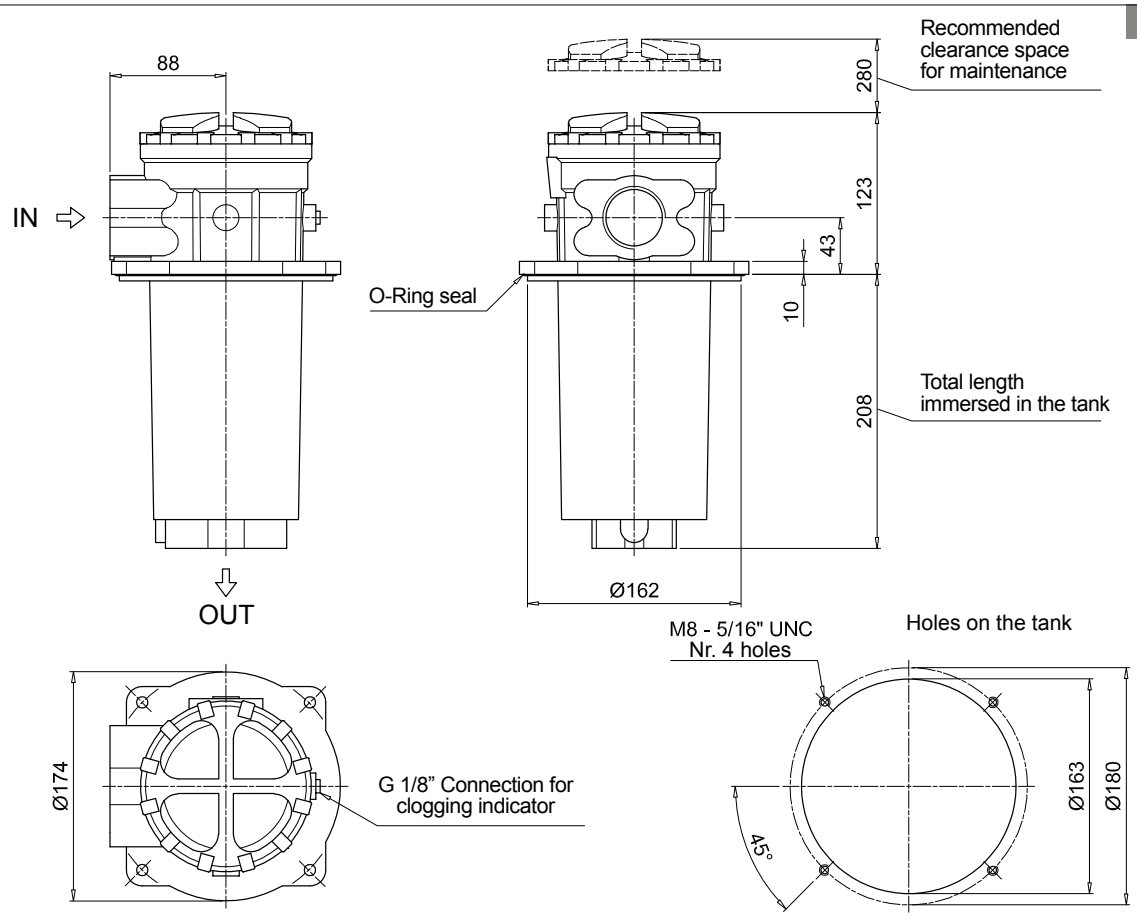

FRI850

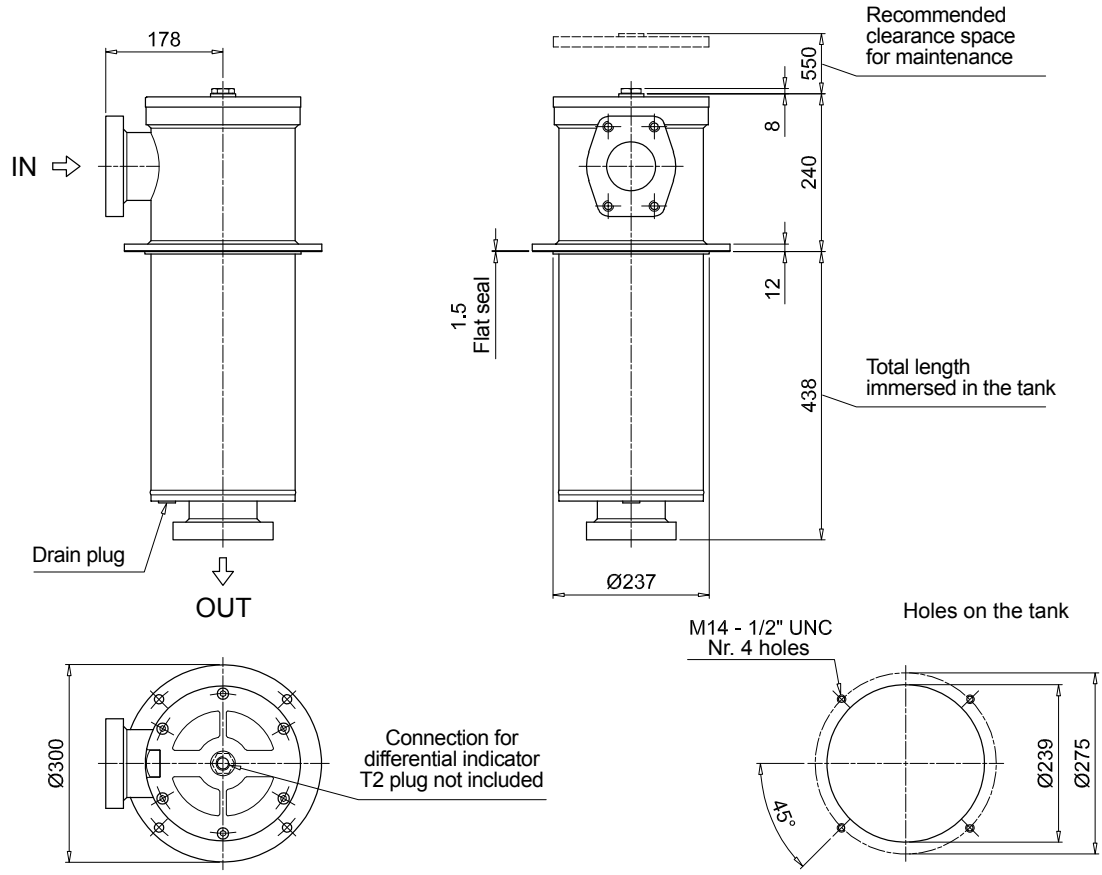

Order number for spare parts

FRI 025 - 040

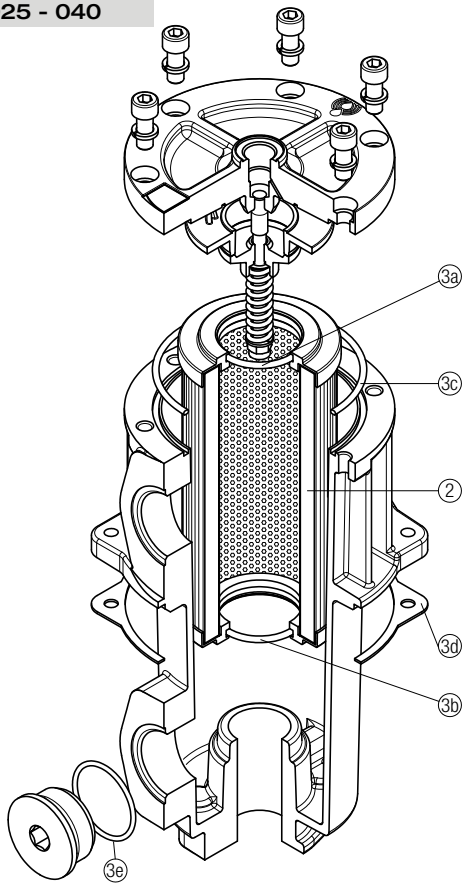

Item:	Q.ty: 1 pc. 2	Q.ty: 1 pc. 3 (3a ÷ 3e)	
Filter series	Filter element	Seal Kit code number NBR	FPM
FRI 025	See order table	02050213	02050220
FRI 040		02050214	02050221

FRI 100 - 250 - 630

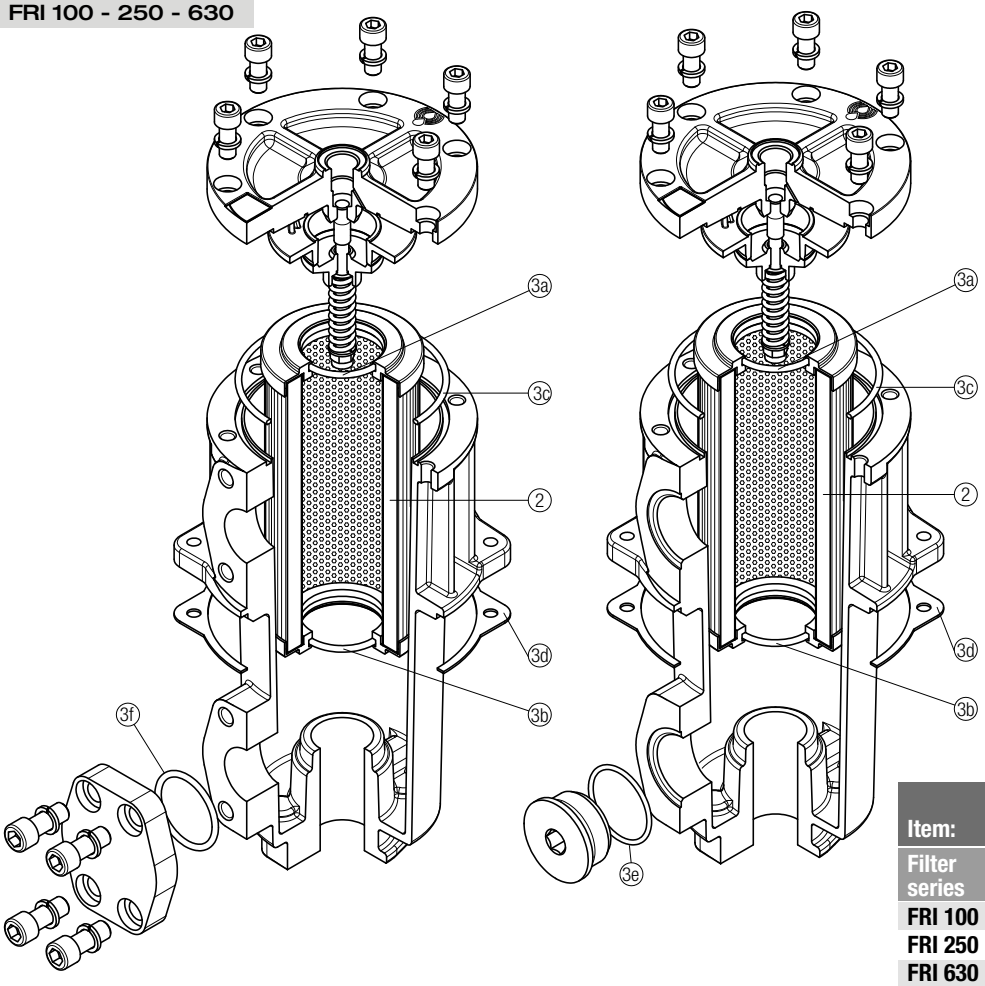

Item:	Q.ty: 1 pc. 2	Q.ty: 1 pc. 3 (3a ÷ 3f)	
Filter series	Filter element	Seal Kit code number NBR	FPM
FRI 100	See order table	02050215	02050222
FRI 250		02050216	02050223
FRI 630		02050217	02050224

Order number for spare parts

FRI 255

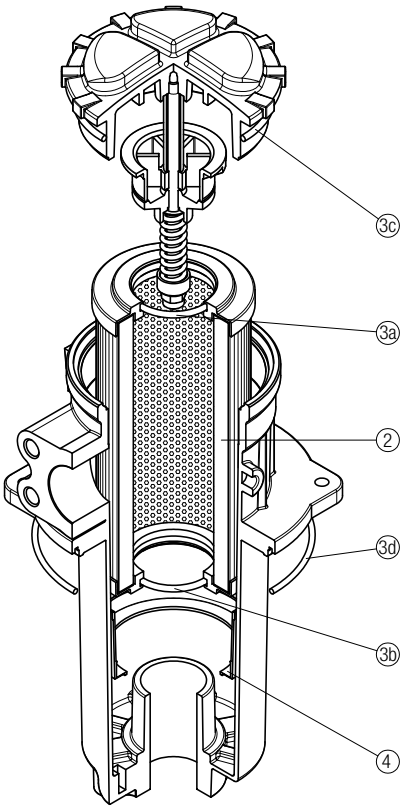

Item:	Q.ty: 1 pc. 2	Q.ty: 1 pc. 3 (3a ÷ 3d)		Q.ty: 1 pc. 4
Filter series	Filter element	Seal Kit code number NBR	FPM	Contamination retainer binder
FRI 255	See order table	02050013	02050014	01060301

FRI 850

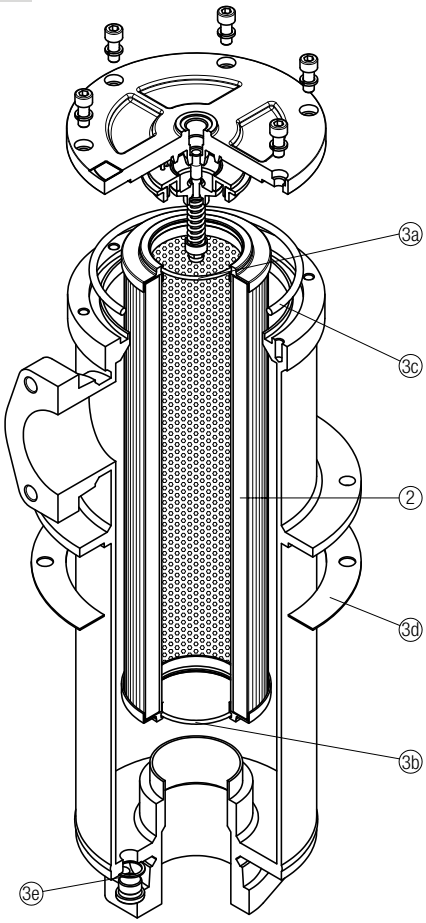

Item:	Q.ty: 1 pc. 2	Q.ty: 1 pc. 3 (3a ÷ 3e)	
Filter series	Filter element	Seal Kit code number NBR	FPM
FRI 850	See order table	02050218	02050225

RF2 series

Maximum working pressure up to 2 MPa (20 bar) - Flow rate up to 615 l/min

RF2 GENERAL INFORMATION

Description

Return filter

Maximum working pressure up to 2 MPa (20 bar)
Flow rate up to 615 l/min

RF2250 and RF2350 are ranges of return filters for side tank mounting with integrated shut-off valve for protection of the reservoir against the system contamination.
They are placed below the minimum oil level, directly connected to the return line of the system.
The shut-off valve closes automatically when the cover is removed, allowing the filter element replacement without the fluid drop.

Available features:
- Female threaded connections up to 1" and flanged connections up to 1 1/2", for a maximum flow rate of 350 l/min
- Bypass valve, to relieve excessive pressure drop across the filter media
- Magnetic filter, to hold the ferrous particles
- Visual, electrical and electronic clogging indicators

Common applications:
- Compact mobile machines
- Compact industrial equipment

Technical data

Filter housing materials
- Filter body: Aluminium
- Cover: Polyamide, GF reinforced
- Valve: Polyamide, GF reinforced - Steel
- Anti-Emptying valve: Steel

Bypass valve
Opening pressure 175 kPa (1.75 bar) ±10%

Δp element type
- Microfibre filter elements - series CU: 10 bar
- Fluid flow through the filter element from OUT to IN

Seals
- Standard NBR series A
- Optional FPM series V

Temperature
From -25 °C to +110 °C

Note
RF2 250-350 filters mounting, see the drawings on page 235 and following

Weights [kg] and volumes [dm³]

Filter series	Weights [kg]	Volumes [dm³]
	Length 1	Length 1
RF2 250	2.6	2.0
RF2 350	2.8	2.0

FILTER ASSEMBLY SIZING
Flow rates [l/min]

		Filter element design - N Series							
Filter series	Length	A03	A06	A10	A16	A25	M25 M60 M90	P10	P25
RF2 250	**1**	148	184	278	307	447	615	447	485
RF2 350	**1**	148	184	278	307	447	615	447	485

Maximum flow rate for a complete return filter with a pressure drop Δp = 0.5 bar.
The reference fluid has a kinematic viscosity of 30 mm^2/s (cSt) and a density of 0.86 kg/dm^3.
For different pressure drop or fluid viscosity we recommend to use our selection software available on www.mpfiltri.com.
You can also calculate the right size using the formulas present on the FILTER SIZING paragraph at the beginning of the full catalogue or at the beginning of the filter family brochure.
Please, contact our Sales Department for further additional information.

Hydraulic symbols

Filter series	Style B - E
RF2 250	•
RF2 350	•

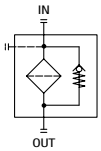

Pressure drop
Filter housings Δp pressure drop

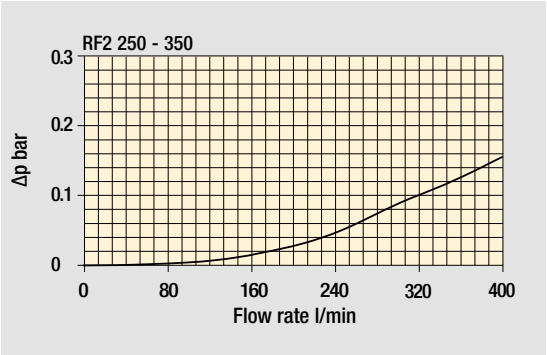

Bypass valve pressure drop

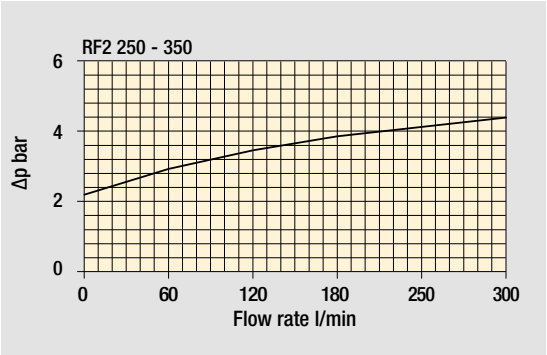

The curves are plotted using mineral oil with density of 0.86 kg/dm^3 in compliance with ISO 3968. Δp varies proportionally with density.

Designation & Ordering code

COMPLETE FILTER

Configuration example 1:	RF2250	W	F2	E	M25	P01
Configuration example 2:	RF2350	A	G1	B	A25	P01

Series and size

RF2250
RF2350

Seals and treatments		Filtration rating Axx	Mxx	Pxx
A	NBR	•	•	•
V	FPM	•	•	•
W	NBR compatible with fluids HFA-HFB-HFC	•	•	
Z	FPM compatible with fluids HFA-HFB-HFC	•	•	

Connections		Aux (only RF2350)	Mxx	Pxx
G1	G 1 1/2”	G 1”	•	•
G2	1 1/2” NPT	-	•	
G3	SAE 24 - 1 7/8” - 12 UN	SAE 16 - 1 5/16” - 12 UN	•	•
G4	G 1 1/4”	-	•	
G5	1 1/4” NPT	-	•	
G6	SAE 20 - 1 5/8” - 12 UN	-	•	
G7	G 1”	-	•	
G8	1” NPT	-	•	
G9	SAE 16 - 1 5/16” - 12 UN	-	•	
F1	1 1/2” SAE 3000 psi/M	-	•	
F2	1 1/2” SAE 3000 psi/UNC	-	•	

Bypass valve

B 1.75 bar
E 3 bar

Filtration rating (filter media)

A03	Inorganic microfiber 3 µm	**M25**	Wire mesh 25 µm
A06	Inorganic microfiber 6 µm	**M60**	Wire mesh 60 µm
A10	Inorganic microfiber 10 µm	**M90**	Wire mesh 90 µm
A16	Inorganic microfiber 16 µm	**P10**	Resin impregnated paper 10 µm
A25	Inorganic microfiber 25 µm	**P25**	Resin impregnated paper 25 µm

Execution

P01 MP Filtri standard
Pxx Customized

FILTER ELEMENT

Configuration example 1:	CU250	M25	W	P01
Configuration example 2:	CU250	A25	N	P01

Element series and size

CU250

Filtration rating (filter media)

A03	Inorganic microfiber 3 µm	**M25**	Wire mesh 25 µm
A06	Inorganic microfiber 6 µm	**M60**	Wire mesh 60 µm
A10	Inorganic microfiber 10 µm	**M90**	Wire mesh 90 µm
A16	Inorganic microfiber 16 µm	**P10**	Resin impregnated paper 10 µm
A25	Inorganic microfiber 25 µm	**P25**	Resin impregnated paper 25 µm

Seals and treatments			Filtration rating Axx	Mxx	Pxx
N	NBR		•	•	•
V	FPM		•	•	•
W	NBR	head anodized	•	•	
Z	FPM	head anodized	•	•	

filter element compatible with fluids HFA-HFB-HFC

Execution

P01 MP Filtri standard
Pxx Customized

RF2250
Threaded connections "G"

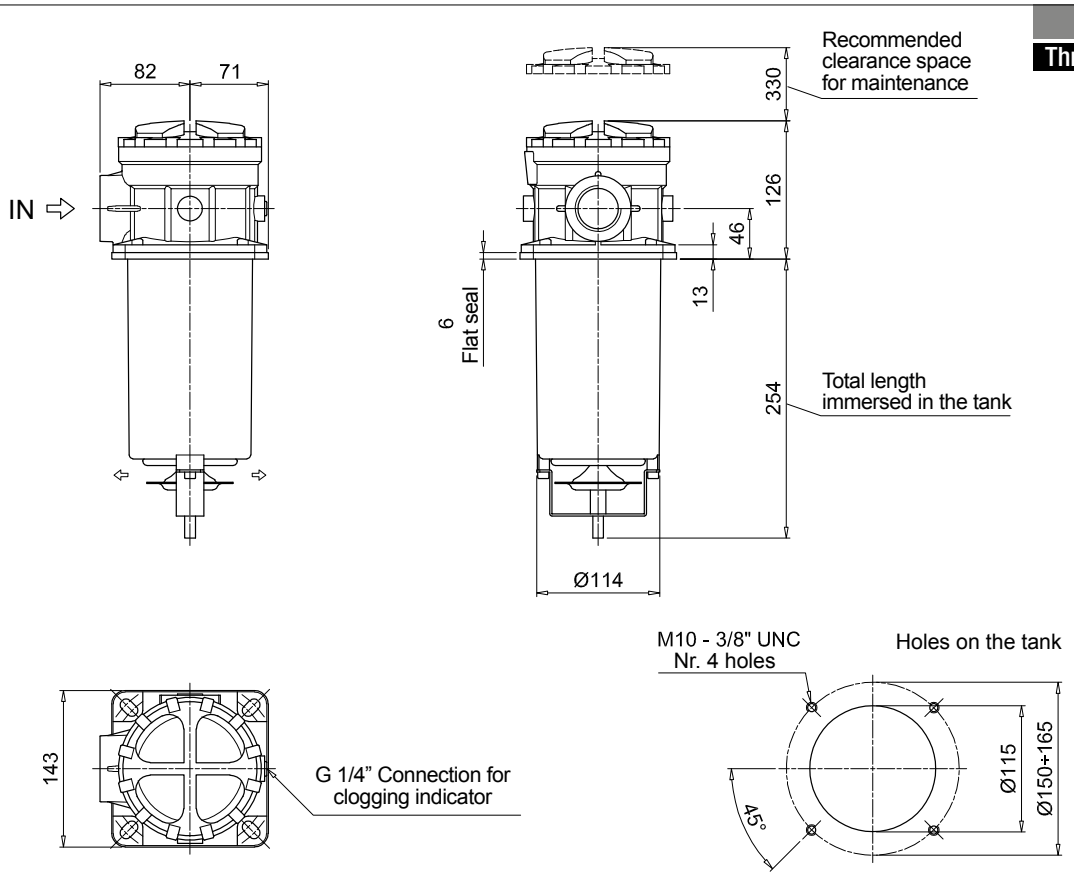

RF2250
Flange connections "F"

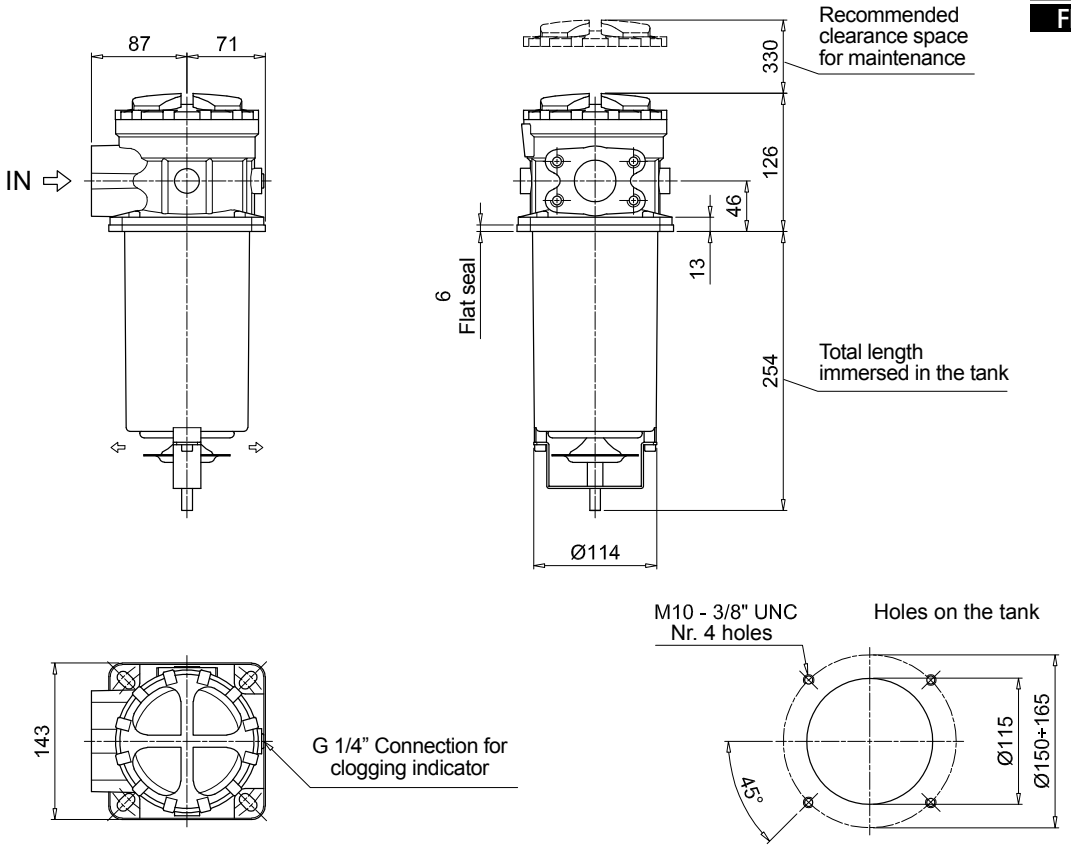

Dimensions

RF2350

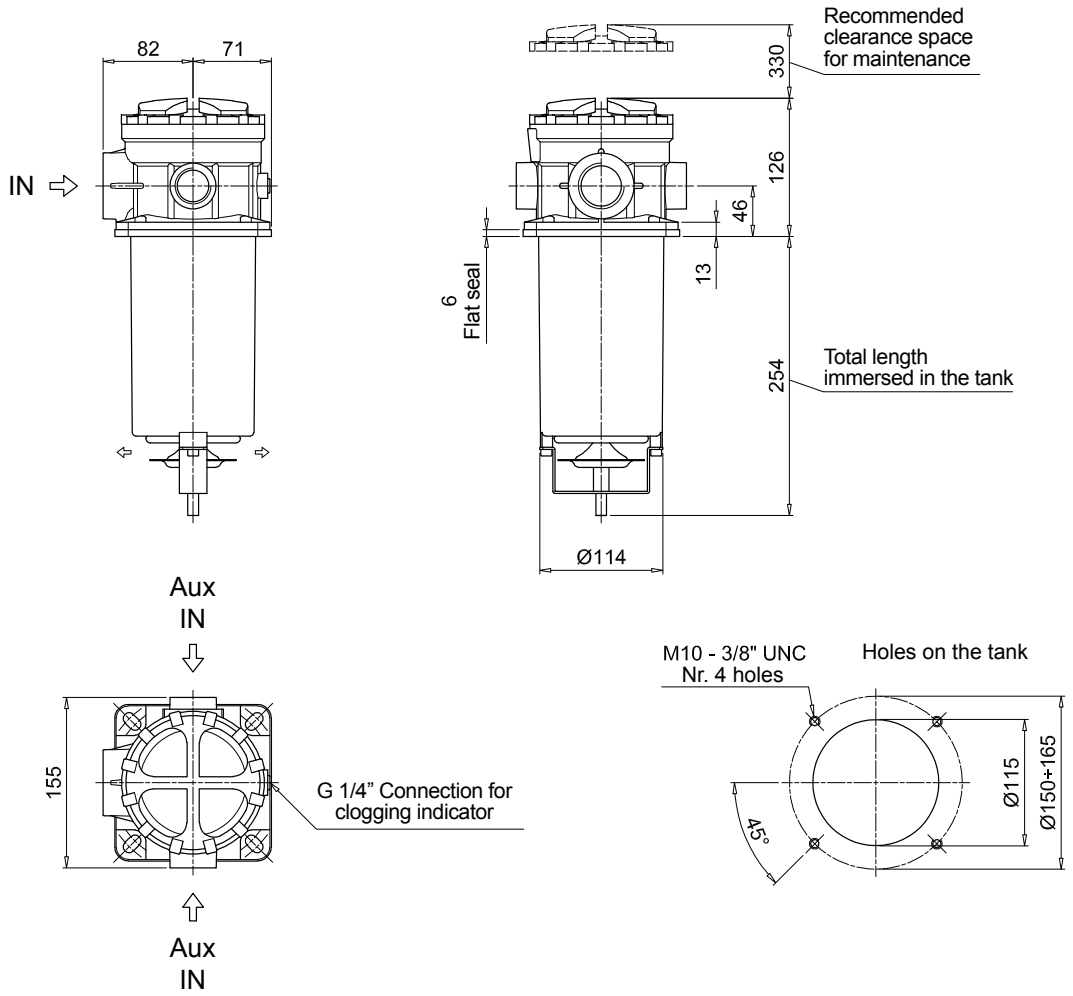

Order number for spare parts

RF2 250 - 350

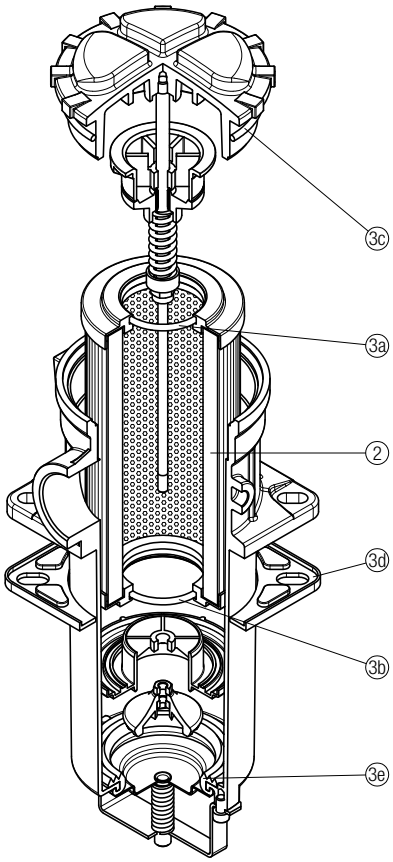

	Q.ty: 1 pc.	Q.ty: 1 pc.	
Item:	2	3 (3a ÷ 3e)	
Filter series	**Filter element**	**Seal Kit code number NBR**	**FPM**
RF2 250 **RF2 350**	See order table	02050586	02050587

Clogging indicators

Barometric indicators
Differential indicators

Introduction

Filter elements are efficient only if their Dirt Holding Capacity is fully exploited. This is achieved by using filter housings equipped with clogging indicators.

These devices trip when the clogging of the filter element causes an increase in pressure drop across the filter element.

The indicator is set to alarm before the element becomes fully clogged.

MP Filtri can supply indicators of the following designs:

- **Vacuum switches and gauges**
- **Pressure switches and gauges**
- **Differential pressure indicators**

These type of devices can be provided with a visual, electrical or both signals.

Suitable indicator types

BAROMETRIC INDICATORS

Pressure indicators are used on the Return line to check the efficiency of the filter element.
They measure the pressure upstream of the filter element.
Standard items are produced with R 1/8" EN 10226 connection.

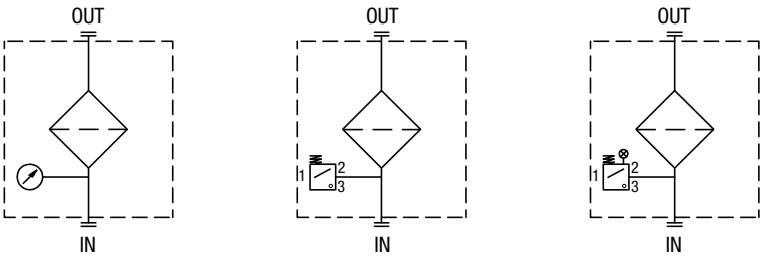

DIFFERENTIAL INDICATORS

Differential indicators are used on the Pressure line to check the efficiency of the filter element.
They measure the pressure upstream and downstream of the filter element (differential pressure).
Standard items are produced with special connection G 1/2" size.
Also available in Stainless Steel models.

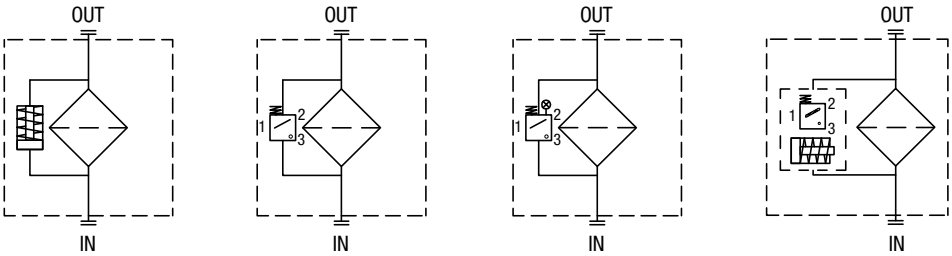

Quick reference guide

Filter series	Visual indicator	Electrical indicator	Electrical / Visual indicator	Electronic indicator
MPFX-MPTX-MPF-MPT with bypass 1.75 bar MPH with bypass 1.75 bar	BVA14P01 BVR14P01 BVP20HP01 BVQ20HP01	BEA15HA50P01 BEM15HA41P01	BLA15HA51P01 BLA15HA52P01 BLA15HA53P01 BLA15HA71P01	
MPFX-MPTX-MPF-MPT with bypass 3 bar MPH with bypass 2.5 bar FRI 255	BVA25P01 BVR25P01 BVP20HP01 BVQ20HP01	BEA20HA50P01 BEM20HA41P01	BLA20HA51P01 BLA20HA52P01 BLA20HA53P01 BLA20HA71P01	
MPLX FRI 025 - 040 - 100 - 250 - 630 - 850	DVA20xP01 DVM20xP01	DEA20xA50P01 DEM20xAxxP01	DLA20xA51P01 DLA20xA52P01 DLA20xA71P01 DLE20xA50P01 DLE20xF50P01	DTA20xF70P01

BEA*50

Electrical Pressure Indicator

Settings	Ordering code
1.5 bar ±10%	BE A 15 H A 50 P01
2.0 bar ±10%	BE A 20 H A 50 P01

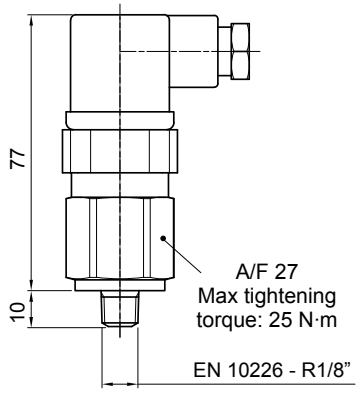

Hydraulic symbol

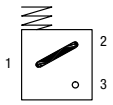

Electrical symbol

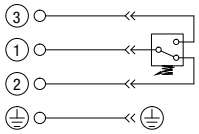

Materials
- Body: Brass
- Base: Black Nylon
- Contacts: Silver
- Seal: HNBR

Technical data
- Max working pressure: 40 bar
- Proof pressure: 60 bar
- Working temperature: From -25 °C to +80 °C
- Compatibility with fluids: Mineral oils, Synthetic fluids HFA, HFB, HFC according to ISO 2943
- Degree of protection: IP65 according to EN 60529

Electrical data
- Electrical connection: EN 175301-803
- Resistive load: 5 A / 14 Vdc
  4 A / 30 Vdc
  5 A / 125 Vac
  4 A / 250 Vac
- Available Atex product: II 1GD Ex ia IIC Tx Ex ia IIIC Tx°C X
- CE certification

BEM*41

Electrical Pressure Indicator

Settings	Ordering code
1.5 bar ±10%	BE M 15 H A 41 P01
2.0 bar ±10%	BE M 20 H A 41 P01

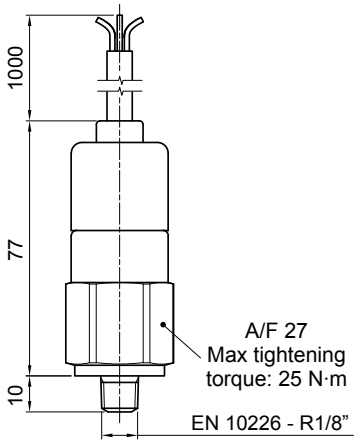

Hydraulic symbol

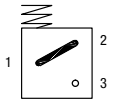

Electrical symbol

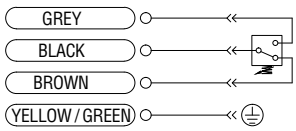

Materials
- Body: Brass
- Base: Black Nylon
- Contacts: Silver
- Seal: HNBR

Technical data
- Max working pressure: 40 bar
- Proof pressure: 60 bar
- Working temperature: From -25 °C to +80 °C
- Compatibility with fluids: Mineral oils, Synthetic fluids HFA, HFB, HFC according to ISO 2943
- Degree of protection: IP67 according to EN 60529

Electrical data
- Electrical connection: Four-core cable
- Resistive load: 5 A / 14 Vdc
  4 A / 30 Vdc
  5 A / 125 Vac
  4 A / 250 Vac
- CE certification

On request this indicator can be provided with main connectors in use for wirings.

BL*51 - BL*52 - BL*53

Electrical/Visual Pressure Indicator

Settings	Ordering code
1.5 bar ±10%	BL A 15 H A xx P01
2.0 bar ±10%	BL A 20 H A xx P01

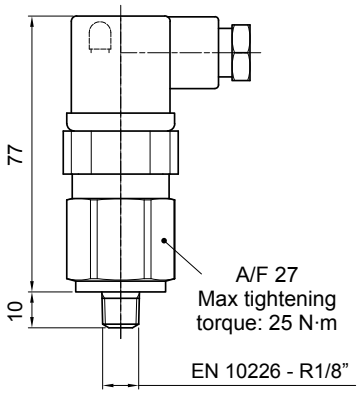

Hydraulic symbol

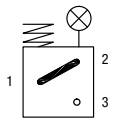

Electrical symbol

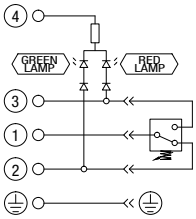

Materials
- Body: Brass
- Base: Transparent Nylon
- Contacts: Silver
- Seal: HNBR

Technical data
- Max working pressure: 40 bar
- Proof pressure: 60 bar
- Working temperature: From -25 °C to +80 °C
- Compatibility with fluids: Mineral oils, Synthetic fluids HFA, HFB, HFC according to ISO 2943
- Degree of protection: IP65 according to EN 60529

Electrical data
- Electrical connection: EN 175301-803

- Type	51	52	53
- Lamps	24 Vdc	110 Vdc	230 Vac
- Resistive load:	1 A / 24 Vdc	1 A / 110 Vdc	1 A / 230 Vac

Dimensions

BL*71

Electrical/Visual Pressure Indicator

Settings	Ordering code
1.5 bar ±10%	BL A 15 H A 71 P01
2.0 bar ±10%	BL A 20 H A 71 P01

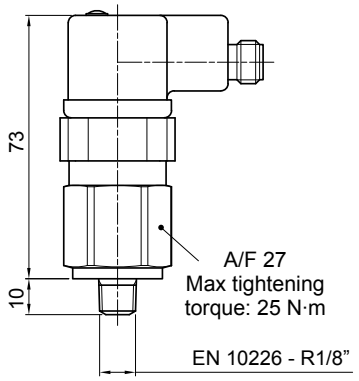

Hydraulic symbol

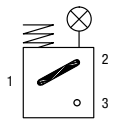

Electrical symbol

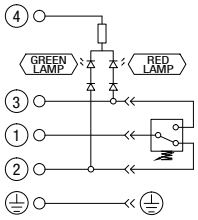

Materials
- Body: Brass
- Base: Black Nylon
- Contacts: Silver
- Seal: HNBR

Technical data
- Max working pressure: 40 bar
- Proof pressure: 60 bar
- Working temperature: From -25 °C to +80 °C
- Compatibility with fluids: Mineral oils, Synthetic fluids HFA, HFB, HFC according to ISO 2943
- Degree of protection: IP65 according to EN 60529

Electrical data
- Electrical connection: IEC 61076-2-101 D (M12)
- Lamps: 24 Vdc
- Resistive load: 0.4 A / 24 Vdc

BVA

Axial Pressure Gauge

Settings	Ordering code
1.4 bar ±10%	BV A 14 P01
2.5 bar ±10%	BV A 25 P01

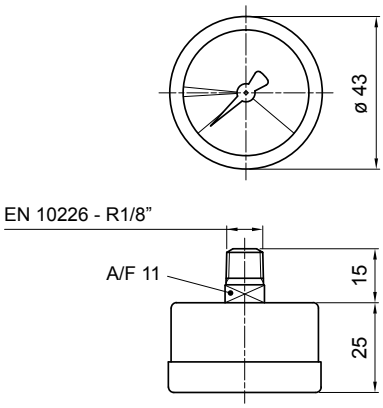

Hydraulic symbol

Dial scale

BV A 14 P01

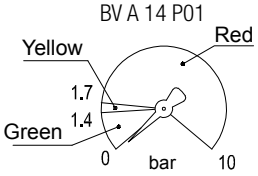

BV A 25 P01

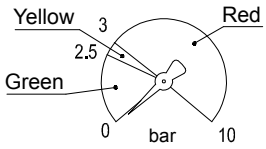

Materials
- Case: Painted Steel
- Window: Transparent plastic
- Dial: Painted Steel
- Pointer: Painted Aluminium
- Pressure connection: Brass
- Pressure element: Bourdon tube Cu-alloy soft soldered

Technical data
- Max working pressure: Static: 7 bar
  Fluctuating: 6 bar
  Short time: 10 bar
- Working temperature: From -40 °C to +60 °C
- Compatibility with fluids: Mineral oils, Synthetic fluids HFA, HFB, HFC according to ISO 2943
- Accuracy: Class 2.5 according to EN 13190
- Degree of protection: IP31 according to EN 60529

BVR

Radial Pressure Gauge

Settings	Ordering code
1.4 bar ±10%	BV R 14 P01
2.5 bar ±10%	BV R 25 P01

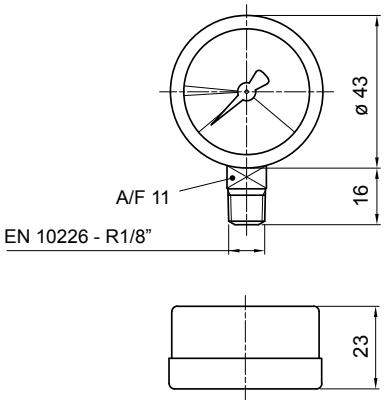

Hydraulic symbol

Dial scale

BV R 14 P01

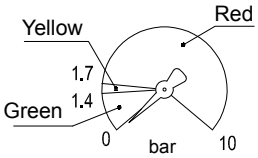

BV R 25 P01

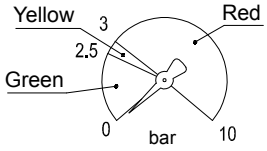

Materials
- Case: Painted Steel
- Window: Transparent plastic
- Dial: Painted Steel
- Pointer: Painted Aluminium
- Pressure connection: Brass
- Pressure element: Bourdon tube Cu-alloy soft soldered

Technical data
- Max working pressure: Static: 7 bar
  Fluctuating: 6 bar
  Short time: 10 bar
- Working temperature: From -40 °C to +60 °C
- Compatibility with fluids: Mineral oils, Synthetic fluids HFA, HFB, HFC according to ISO 2943
- Accuracy: Class 2.5 according to EN 13190
- Degree of protection: IP31 according to EN 60529

BVP - BVQ

Visual Pressure Indicator

Setting	Ordering code
1.5 bar ±10%	BV P 15 H P01
	BV Q 15 H P01
2.0 bar ±10%	BV P 20 H P01
	BV Q 20 H P01

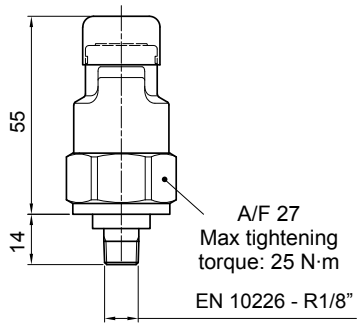

Hydraulic symbol

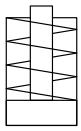

Materials

- Body: Brass
- Cover / internal parts: Nylon
- Caps: VMQ
- Seal: HNBR

Technical data

- Reset: BVP - Automatic reset
  BVQ - Manual reset
- Max working pressure: 10 bar
- Proof pressure: 15 bar
- Working temperature: From -25 °C to +80 °C
- Compatibility with fluids: Mineral oils, Synthetic fluids
  HFA, HFB, HFC according to ISO 2943
- Degree of protection: IP45 according to EN 60529

Signals

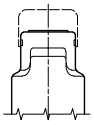

Absence of pressure
(no indicator)

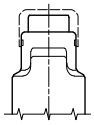

Presence of pressure
(green button rises gradually)

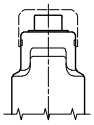

Clogged filter element
(red button risen)

DESIGNATION & ORDERING CODE

Configuration example 1:	BE	M	15	H	A	41	P01
Configuration example 2:	BL	A	20	H	A	71	P01
Configuration example 3:	BV	R	14				P01
Configuration example 4:	BV	P	20	H			P01

Series

- **BE** Electrical pressure indicator
- **BL** Electrical/Visual pressure indicator
- **BV** Visual pressure indicator

Type	BE	BL
A Standard type	•	•
M With wired electrical connection	•	

BV	
A	Axial connection pressure gauge
R	Radial connection pressure gauge
P	Visual indicator with automatic reset
Q	Visual indicator with manual reset

Pressure setting	BEA-BEM	BLA	BVA-BVR	BVP-BVQ
14 1.4 bar			•	
15 1.5 bar	•	•		
20 2.0 bar	•	•		•
25 2.5 bar			•	

Seals	BE	BLA	BVA-BVR	BVP-BVQ
H HNBR	•	•		•

Thermostat	BEA-BEM	BLA	BV
A Without	•	•	

Electrical connections	BEA	BEM	BL	BV
41 Connection via four-core cable		•		
50 Connection EN 175301-803	•			
51 Connection EN 175301-803, transparent base with lamps 24 Vdc			•	
52 Connection EN 175301-803, transparent base with lamps 110 Vdc			•	
53 Connection EN 175301-803, transparent base with lamps 230 Vdc			•	
71 Connection IEC 61076-2-101 D (M12), black base with lamps 24 Vdc			•	

Option

- **P01** MP Filtri standard
- **Pxx** Customized

Dimensions

DEA*50

Electrical Differential Indicator

Settings	Ordering code
2.0 bar ±10%	DE A 20 x A 50 P01

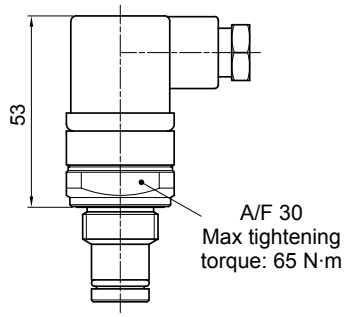

Hydraulic symbol

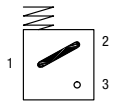

Electrical symbol

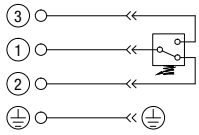

Materials
- Body: Brass
- Base: Black Nylon
- Contacts: Silver
- Seal: HNBR - FPM

Technical data
- Max working pressure: 420 bar
- Proof pressure: 630 bar
- Burst pressure: 1260 bar
- Working temperature: From -25 °C to +110 °C
- Compatibility with fluids: Mineral oils, Synthetic fluids HFA, HFB, HFC according to ISO 2943
- Degree protection: IP66 according to EN 60529 IP69K according to ISO 20653

Electrical data
- Electrical connection: EN 175301-803
- Resistive load: 0.2 A / 115 Vdc

DEM*10

Electrical Differential Indicator

Settings	Ordering code
2.0 bar ±10%	DE M 20 xx 10 P01

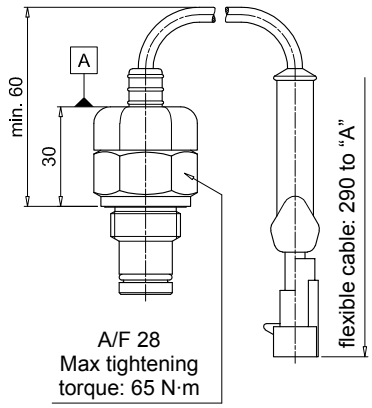

Hydraulic symbol

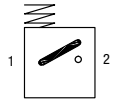

Electrical symbol

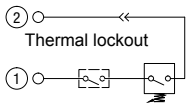

Materials
- Body: Brass
- Base: Black Nylon
- Contacts: Silver
- Seal: HNBR - FPM

Technical data
- Max working pressure: 420 bar
- Proof pressure: 630 bar
- Burst pressure: 1260 bar
- Working temperature: From -25 °C to +110 °C
- Compatibility with fluids: Mineral oils, Synthetic fluids HFA, HFB, HFC according to ISO 2943
- Degree protection: IP66 according to EN 60529

Electrical data
- Electrical connection: AMP Superseal series 1.5
- Resistive load: 0.2 A / 115 Vdc
- Switching type: Normally open contacts (NC on request)
- Thermal lockout: Normally open up to 30 °C (option "F")

DEM*20

Electrical Differential Indicator

Settings	Ordering code
2.0 bar ±10%	DEM20xx20P01

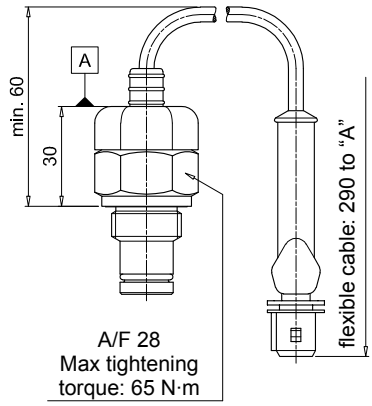

Hydraulic symbol

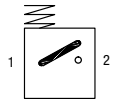

Electrical symbol

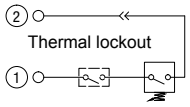

Materials
- Body: Brass
- Base: Black Nylon
- Contacts: Silver
- Seal: HNBR - FPM

Technical data
- Max working pressure: 420 bar
- Proof pressure: 630 bar
- Burst pressure: 1260 bar
- Working temperature: From -25 °C to +110 °C
- Compatibility with fluids: Mineral oils, Synthetic fluids HFA, HFB, HFC according to ISO 2943
- Degree protection: IP66 according to EN 60529

Electrical data
- Electrical connection: AMP Time junior
- Resistive load: 0.2 A / 115 Vdc
- Switching type: Normally open contacts (NC on request)
- Thermal lockout: Normally open up to 30 °C (option "F")

DEM*30

Electrical Differential Indicator

Settings	Ordering code
2.0 bar ±10%	DE M 20 xx 30 P01

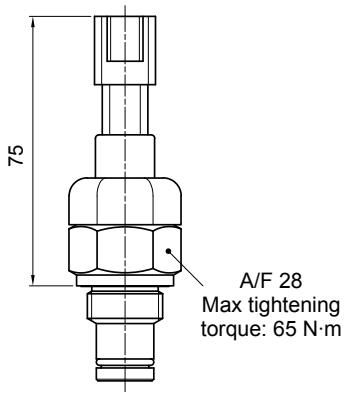

Hydraulic symbol

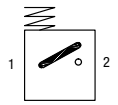

Electrical symbol

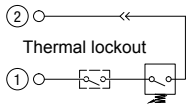

Materials
- Body: Brass
- Base: Black Nylon
- Contacts: Silver
- Seal: HNBR - FPM

Technical data
- Max working pressure: 420 bar
- Proof pressure: 630 bar
- Burst pressure: 1260 bar
- Working temperature: From -25 °C to +110 °C
- Compatibility with fluids: Mineral oils, Synthetic fluids HFA, HFB, HFC according to ISO 2943
- Degree protection: IP66 according to EN 60529

Electrical data
- Electrical connection: Deutsch DT-04-2-P
- Resistive load: 0.2 A / 115 Vdc
- Switching type: Normally open contacts (NC on request)
- Thermal lockout: Normally open up to 30 °C (option “F”)

DEM*35

Electrical Differential Indicator

Settings	Ordering code
2.0 bar ±10%	DE M 20 xx 35 P01

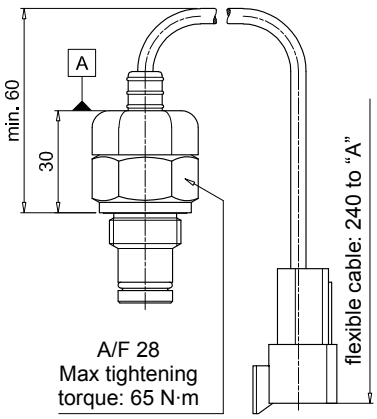

Hydraulic symbol

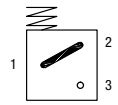

Electrical symbol

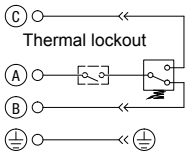

Materials
- Body: Brass
- Base: Black Nylon
- Contacts: Silver
- Seal: HNBR - FPM

Technical data
- Max working pressure: 420 bar
- Proof pressure: 630 bar
- Burst pressure: 1260 bar
- Working temperature: From -25 °C to +110 °C
- Compatibility with fluids: Mineral oils, Synthetic fluids HFA, HFB, HFC according to ISO 2943
- Degree protection: IP66 according to EN 60529

Electrical data
- Electrical connection: Deutsch DT-04-3-P
- Resistive load: 0.2 A / 115 Vdc
- Switching type: SPDT contact
- Thermal lockout: Normally open up to 30 °C (option “F”)

DLA*51 - DLA*52

Electrical/Visual Differential Indicator

Settings	Ordering code
2.0 bar ±10%	DL A 20 x A xx P01

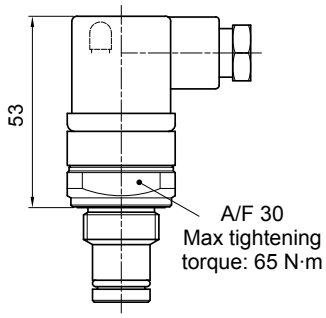

Hydraulic symbol

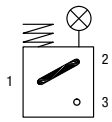

Electrical symbol

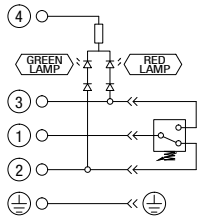

Materials
- Body: Brass
- Base: Transparent Nylon
- Contacts: Silver
- Seal: HNBR - FPM

Technical data
- Max working pressure: 420 bar
- Proof pressure: 630 bar
- Burst pressure: 1260 bar
- Working temperature: From -25 °C to +110 °C
- Compatibility with fluids: Mineral oils, Synthetic fluids HFA, HFB, HFC according to ISO 2943
- Degree protection: IP66 according to EN 60529 IP69K according to ISO 20653

Electrical data

- Electrical connection:	EN 175301-803	
- Type	51	52
- Lamps	24 Vdc	110 Vdc
- Resistive load:	1 A / 24 Vdc	1 A / 110 Vdc

Dimensions

DLA*71

Electrical/Visual Differential Indicator

Settings	Ordering code
2.0 bar ±10%	DL A 20 x A 71 P01

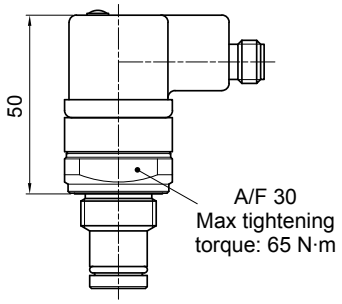

Hydraulic symbol

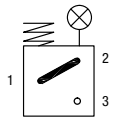

Electrical symbol

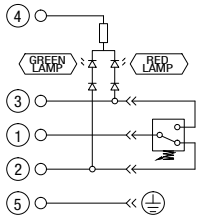

Materials
- Body: Brass
- Base: Black Nylon
- Contacts: Silver
- Seal: HNBR - FPM

Technical data
- Max working pressure: 420 bar
- Proof pressure: 630 bar
- Burst pressure: 1260 bar
- Working temperature: From -25 °C to +110 °C
- Compatibility with fluids: Mineral oils, Synthetic fluids HFA, HFB, HFC according to ISO 2943
- Degree protection: IP65 according to EN 60529 IP69K according to ISO 20653

Electrical data
- Electrical connection: IEC 61076-2-101 D (M12)
- Lamps 24 Vdc
- Resistive load: 0.4 A / 24 Vdc

DLE*A50

Electrical/Visual Differential Indicator

Settings	Ordering code
2.0 bar ±10%	DL E 20 x A 50 P01

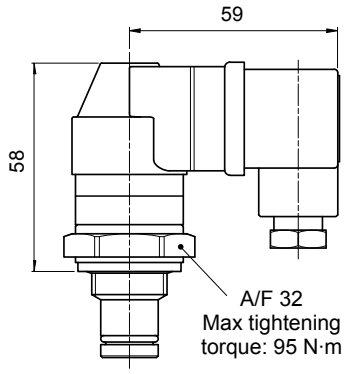

Hydraulic symbol

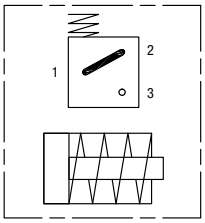

Electrical symbol

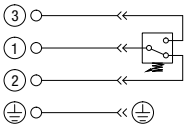

Materials
- Body: Brass
- Base: Black Nylon
- Contacts: Silver
- Seal: HNBR - FPM

Technical data
- Max working pressure: 420 bar
- Proof pressure: 630 bar
- Burst pressure: 1260 bar
- Working temperature: From -25 °C to +110 °C
- Compatibility with fluids: Mineral oils, Synthetic fluids HFA, HFB, HFC according to ISO 2943
- Degree protection: IP65 according to EN 60529

Electrical data
- Electrical connections: EN 175301-803
- Resistive load: 5 A / 250 Vac
- Available the connector with lamps

DLE*F50

Electrical/Visual Differential Indicator

Settings	Ordering code
2.0 bar ±10%	DL E 20 x F 50 P01

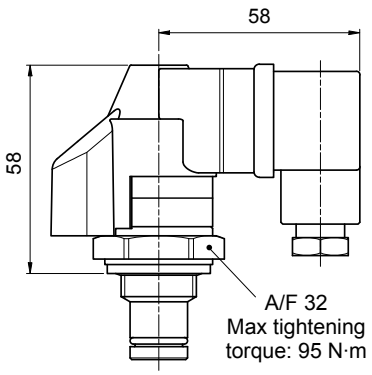

Hydraulic symbol

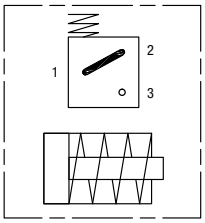

Electrical symbol

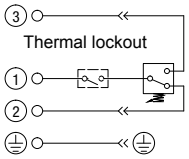

Materials
- Body: Brass
- Base: Black Nylon
- Contacts: Silver
- Seal: HNBR - FPM

Technical data
- Max working pressure: 420 bar
- Proof pressure: 630 bar
- Burst pressure: 1260 bar
- Working temperature: From -25 °C to +110 °C
- Compatibility with fluids: Mineral oils, Synthetic fluids HFA, HFB, HFC according to ISO 2943
- Degree protection: IP65 according to EN 60529

Electrical data
- Electrical connections: EN 175301-803
- Resistive load: 5 A / 250 Vac
- Thermal lockout setting: +30 °C

DTA*70

Electronic Differential Indicator

Settings	Ordering code
2.0 bar ±10%	DT A 20 x x 70 P01

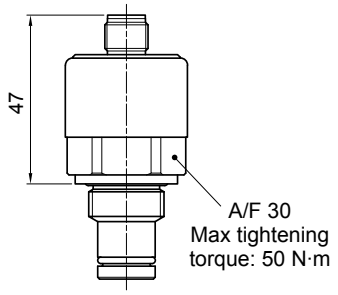

Hydraulic symbol

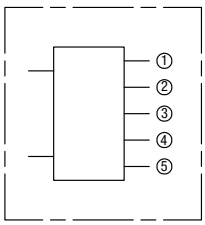

Electrical symbol

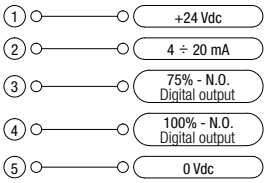

Materials
- Body: Brass
- Internal parts: Brass - Nylon
- Contacts: Silver
- Seal: HNBR - FPM

Industry 4.0 READY

Technical data
- Max working pressure: 420 bar
- Proof pressure: 630 bar
- Burst pressure: 1260 bar
- Compatibility with fluids: Mineral oils, Synthetic fluids HFA, HFB, HFC according to ISO 2943
- Degree protection: IP67 according to EN 60529

Electrical data
- Electrical connection: IEC 61076-2-101 D (M12)
- Power supply: 24 Vdc
- Analogue output: From 4 to 20 mA
- Thermal lockout: 30 °C (all output signals stalled up to 30 °C)

DVA

Visual Differential Indicator

Settings	Ordering code
2.0 bar ±10%	DV A 20 x P01

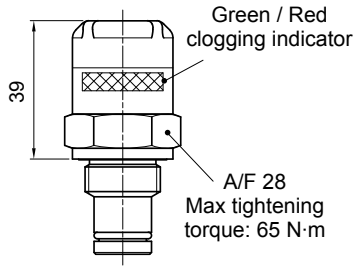

Hydraulic symbol

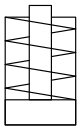

Materials
- Body: Brass
- Internal parts: Brass - Nylon
- Contacts: Silver
- Seal: HNBR - FPM

Technical data
- Reset: Automatic reset
- Max working pressure: 420 bar
- Proof pressure: 630 bar
- Burst pressure: 1260 bar
- Working temperature: From -25 °C to +110 °C
- Compatibility with fluids: Mineral oils, Synthetic fluids HFA, HFB, HFC according to ISO 2943
- Degree protection: IP65 according to EN 60529

DVM

Visual Differential Indicator

Settings	Ordering code
2.0 bar ±10%	DV M 20 x P01

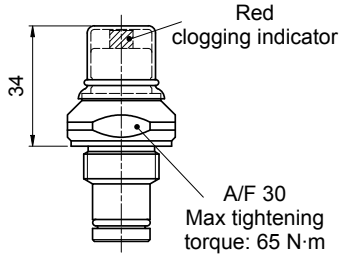

Hydraulic symbol

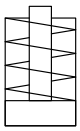

Materials
- Body: Brass
- Internal parts: Brass - Nylon
- Contacts: Silver
- Seal: HNBR - FPM

Technical data
- Reset: Manual reset
- Max working pressure: 420 bar
- Proof pressure: 630 bar
- Burst pressure: 1260 bar
- Working temperature: From -25 °C to +110 °C
- Compatibility with fluids: Mineral oils, Synthetic fluids HFA, HFB, HFC according to ISO 2943
- Degree protection: IP65 according to EN 60529

Dimensions

T2

Indicator plug

Seal	Ordering code
HNBR	T2 H
FPM	T2 V

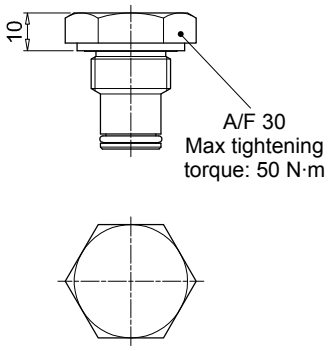

Materials

- Body: Phosphatized steel
- Seal: HNBR / FPM

DESIGNATION & ORDERING CODE - DIFFERENTIAL INDICATORS

Configuration example 1:	DE	M	20	H	F	50	P01
Configuration example 2:	DL	E	20	V	A	71	P01
Configuration example 3:	DT	A	20	H	F	70	P01
Configuration example 4:	DV	M	20	V			P01

Series

- **DE** Electrical differential indicator
- **DL** Electrical/Visual differential indicator
- **DT** Electronic differential indicator
- **DV** Visual differential indicator

Type	DE	DL	DT	DV
A Standard type	•	•	•	**A** With automatic reset
M With wired electrical connection	•			**M** With manual reset
E For high power supply		•		

Pressure setting

- **20** 2.0 bar

Seals

- **H** HNBR
- **V** FPM

Thermostat	DEA	DEM	DLA	DLE	DT	DV
A Without	•	•	•	•		
F With thermostat		•		•	•	

Electrical connections	DEA	DEM	DLA	DLE	DT	DV
10 Connection AMP Superseal series 1.5		•				
20 Connection AMP Timer Junior		•				
30 Connection Deutsch DT-04-2-P		•				
35 Connection Deutsch DT-04-3-P		•				
50 Connection EN 175301-803	•			•		
51 Connection EN 175301-803, transparent base with lamps 24 Vdc			•			
52 Connection EN 175301-803, transparent base with lamps 110 Vdc			•			
70 Connection IEC 61076-2-101 D (M12)					•	
71 Connection IEC 61076-2-101 D (M12), black base with lamps 24 Vdc			•			

Option

- **P01** MP Filtri standard
- **Pxx** Customized

DESIGNATION & ORDERING CODE - DIFFERENTIAL INDICATOR PLUG

Configuration example	T2	H

Series

- **T2** Indicator plug

Seals

- **H** HNBR
- **V** FPM

Accessories

NYLON EXTENSION TUBE

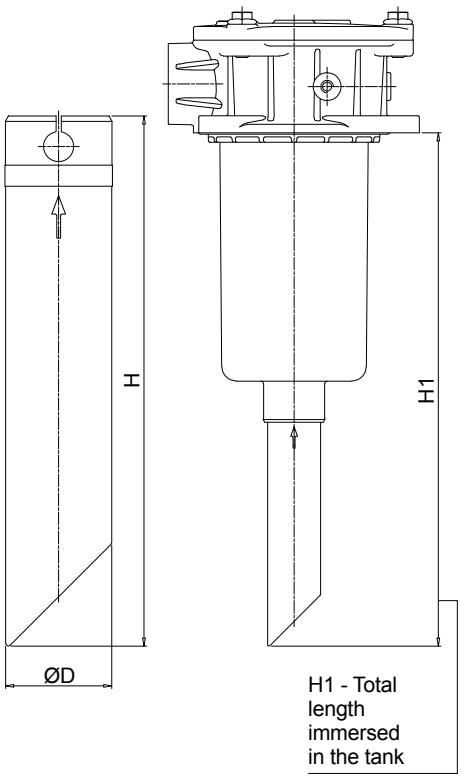

Configuration example: TE | 40 | A | 250

Series
TE

Size	ø D [mm]
25	25
32	32
40	40

Material	
A	Nylon

Length	H [mm]
200	200
250	250
300	300
350	350
400	400
450	450
500	500

COMPATIBILITY TABLE

Filter series	Filter size	Filter length	TE25	TE32	TE40	Tube length H1 [mm] 200	250	300	350	400	450	500
MPF - MPFX	30	1	•			266	316	366	416	466	516	566
MPF	100	1		•		275	325	375	425	475	525	575
		2				322	372	422	472	522	572	622
		3			•	400	450	500	550	600	650	700
		4				502	552	602	652	702	752	802
MPFX	100	1			•	277	327	377	427	477	527	577
		2				322	372	422	472	522	572	622
		3				400	450	500	550	600	650	700
		4				502	552	602	652	702	752	802
MPF MPFX	181	1			•	410	460	510	560	610	660	710
		2				623	673	723	773	823	873	923
MPT MPTX	025	1	•			278	328	378	428	478	528	578
		2				342	392	442	492	542	592	642
		3				380	430	480	530	580	630	680
MPT	101	1		•		273	323	373	423	473	523	573
		2				320	370	420	470	520	570	620
		3			•	396	446	496	546	596	646	696
		4				498	548	598	648	698	748	798
MPTX	101	1			•	273	323	373	423	473	523	573
		2				318	368	418	468	518	568	618
		3				396	446	496	546	596	656	696
		4				498	548	598	648	698	748	798

STEEL EXTENSION TUBE

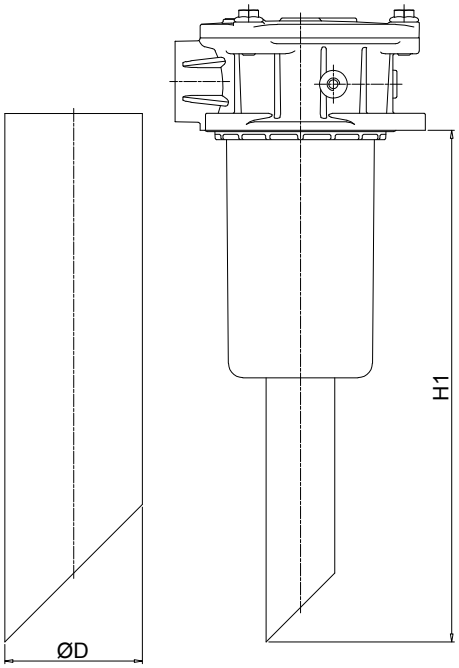

Configuration example:

MPF191 | 2 | A | F1 | A10 | H | B | S60

Length	H1 [mm]
S30	300
S35	350
S40	400
S45	450
S50	500
S60	600
S70	700
S80	800
S90	900

COMPATIBILITY TABLE

Filter series	Filter size	Filter length	ø D [mm] 52	65
MPF	191	2	•	
	192	1	•	
	194	2		•
	400	3		
	410			
	450			
	451			
	750	1		•

DIFFUSER WITH FAST LOCK CONNECTION

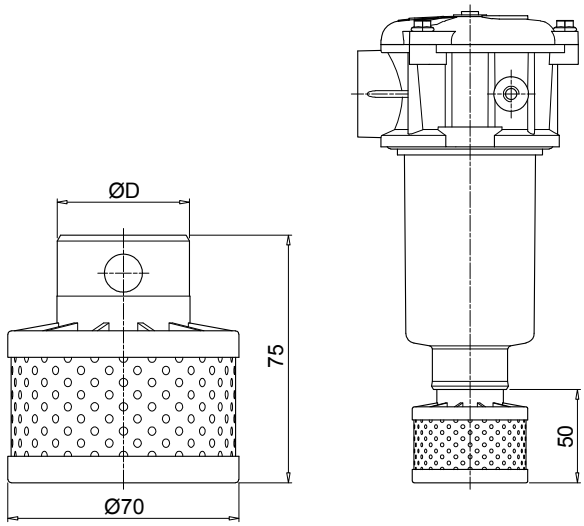

Configuration example: DFS | 32 | A | 075

Series
DFS

Size	ø D [mm]
32	32
40	40

Version	
A	Standard

Length	
075	Standard

COMPATIBILITY TABLE

Filter series	Filter size					Filter Length	DFS32	DFS40
MPF	100		104		110	1	•	
						2		
						3		•
						4		
MPFX	100		104		110	1		•
						2		
						3		
						4		
MPT	101	104	110	114	120	1	•	
						2		
						3		•
						4		
MPTX	101	104	110	114	120	1		•
						2		
						3		
						4		

DIPSTICK

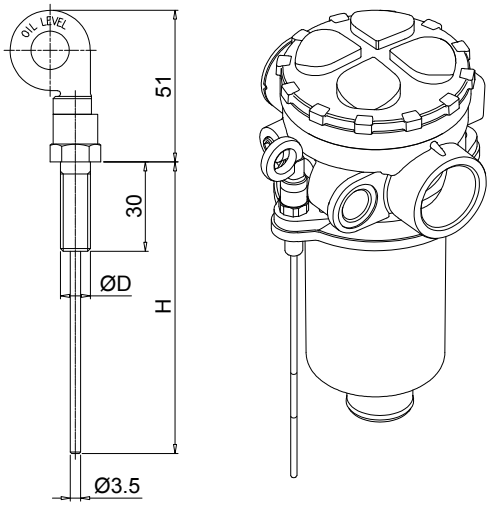

Materials
- Screw: phosphatized steel
- Stick: phosphatized steel
- Handle: Nylon

Technical data
Working temperature: from -25 °C to +110 °C

Configuration example: DPT | 20 | M10 | A | P01

Series
DPT

Length	H [mm]
15	134
20	184
25	234
30	284
35	334

Fastening	
M8	Fastening with screws ø D = M8
M10	Fastening with screws ø D = M10

Seals	
A	NBR
V	FPM

Execution	
P01	MP Filtri standard
Pxx	Customized

FILLER PLUG

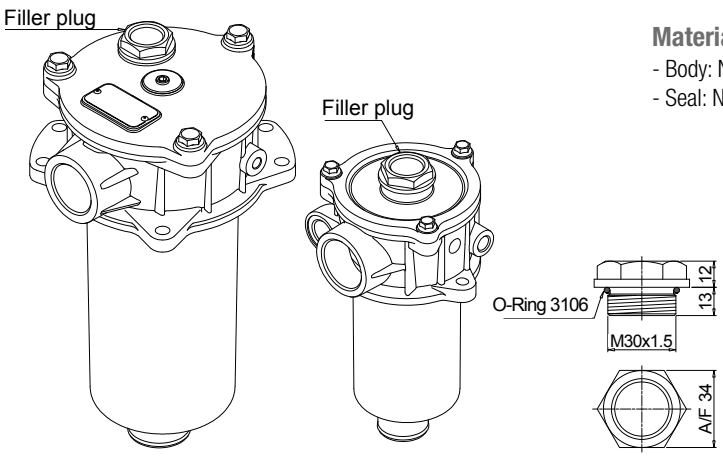

Materials
- Body: Nylon
- Seal: NBR

Technical data
Tightening torque:
15 N·m

For any further information, please, contact our commercial dept.

Clogging indicators are devices that check the life time of the filter elements. They measure the pressure drop through the filter element directly connected to the filter housing.
These devices trip when the clogging of the filter element causes a pressure drop increasing across the filter element.
Filter elements are efficient only if their Dirt Holding Capacity is fully exploited. This is achieved by using filter housings equipped with clogging indicators. The indicator is set to alarm before the element becomes fully clogged.

MP Filtri can supply indicators of the following designs:
- **Vacuum switches and gauges**
- **Pressure switches and gauges**
- **Differential pressure indicators**

These type of devices can be provided with a visual, electrical or both signals. The electronic differential pressure clogging indicator is also available. It provides both analogical 4-20 mA output and digital warning (75% of clogging) and alarm (clogging) outputs.

Clogging Indicators

Clogging indicators

Suitable indicator types

VACUUM INDICATORS
Vacuum indicators are used on the Suction line to check the efficiency of the filter element.
They measure the pressure downstream of the filter element.
Standard items are produced with R 1/4" EN 10226 connection.
Available products with R 1/8" EN 10226 to be fitted on MPS series.

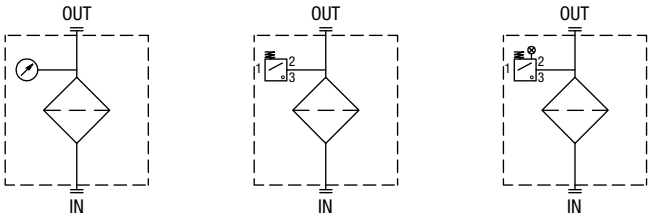

BAROMETRIC INDICATORS
Pressure indicators are used on the Return line to check the efficiency of the filter element.
They measure the pressure upstream of the filter element.
Standard items are produced with R 1/8" EN 10226 connection.

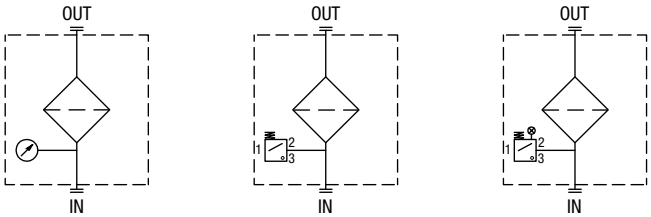

DIFFERENTIAL INDICATORS
Differential indicators are used on the Pressure line to check the efficiency of the filter element.
They measure the pressure upstream and downstream of the filter element (differential pressure).
Standard items are produced with special connection G 1/2" size.
Also available in Stainless Steel models.

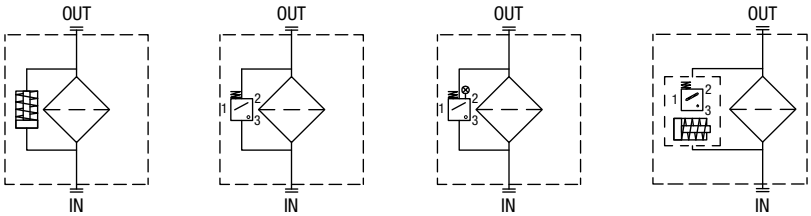

Filter family	Filter series		Electrical indicator	Electrical / Visual indicator	Electronic indicator	Visual indicator
SUCTION FILTERS	ELIXIR® SFEX060-080-110-160		VEB21AA50P01	VLB21AA51P01 VLB21AA52P01 VLB21AA53P01 VLB21AA71P01		VVB16P01 VVS16P01
	SF2 250 - 350 SF2 500 - 501 - 503 - 504 - 505 SF2 510 - 535 - 540		VEA21AA50P01	VLA21AA51P01 VLA21AA52P01 VLA21AA53P01 VLA21AA71P01		VVA16P01 VVR16P01
RETURN FILTERS	With bypass valve	ELIXIR® RFEX060-080-110-160	BEA15HA50P01 BEM15HA41P01	BLA15HA51P01 BLA15HA52P01 BLA15HA53P01 BLA15HA71P01		BVA14P01 BVR14P01 BVP15HP01 BVQ15HP01
	Without bypass valve	ELIXIR® RFEX060-080-110-160	BEA20HA50P01 BEM20HA41P01	BLA20HA51P01 BLA20HA52P01 BLA20HA53P01 BLA20HA71P01		BVA25P01 BVR25P01 BVP20HP01 BVQ20HP01
	With bypass valve	MPFX-MPTX-MPF-MPT - bypass 1.75 bar MPH - bypass 1.75 bar RF2250 - RF2350 - bypass 1.75 bar	BEA15HA50P01 BEM15HA41P01	BLA15HA51P01 BLA15HA52P01 BLA15HA53P01 BLA15HA71P01		BVA14P01 BVR14P01 BVP15HP01 BVQ15HP01
	With bypass valve	MPFX-MPTX-MPF-MPT - bypass 3 bar MPH - bypass 2.5 bar FRI 255 RF2250 - RF2350 - bypass 3 bar	BEA20HA50P01 BEM20HA41P01	BLA20HA51P01 BLA20HA52P01 BLA20HA53P01 BLA20HA71P01		BVA25P01 BVR25P01 BVP20HP01 BVQ20HP01
	MPLX FRI 025 - 040 - 100 - 250 - 630 - 850		DEA20xA50P01 DEM20xA10P01 DEM20xA20P01 DEM20xA30P01 DEM20xA35P01	DLA20xA51P01 DLA20xA52P01 DLA20xA71P01 DLE20xA50P01 DLE20xF50P01	DTA20xF70P01	DVA20xP01 DVM20xP01
RETURN / SUCTION FILTERS	Suction line	MRSX 116 - 165 - 166	VEB21AA50P01	VLB21AA51P01 VLB21AA52P01 VLB21AA53P01 VLB21AA71P01		VVB16P01 VVS16P01
	Return line	MRSX 116 - 165 - 166 LMP 124 MULTIPORT	BEA25HA50P01 BEM25HA41P01 BET25HF10P01 BET25HF30P01 BET25HF50P01	BLA25HA51P01 BLA25HA52P01 BLA25HA53P01 BLA25HA71P01		BVA25P01 BVR25P01 BVP20HP01 BVQ20HP01
SPIN-ON FILTERS	Suction line	MPS 050 - 070 - 100 - 150 MPS 200 - 250 - 300 - 350	VEB21AA50P01	VLB21AA51P01 VLB21AA52P01 VLB21AA53P01 VLB21AA71P01		VVB16P01 VVS16P01
	Return line	MPS 050 - 070 - 100 - 150 MPS 200 - 250 - 300 - 350	BEA15HA50P01 BEM15HA41P01	BLA15HA51P01 BLA15HA52P01 BLA15HA53P01 BLA15HA71P01		BVA14P01 BVR14P01 BVP20HP01 BVQ20HP01
	In-line	MPS 051 - 071 - 101 - 151 MPS 301 - 351 MSH 050 - 070 - 100 - 150	DEA12xA50P01 DEM12xAxxP01	DLA12xA51P01 DLA12xA52P01 DLA12xA71P01 DLE12xA50P01 DLE12xF50P01 DLE20xF50P01 DLE20xF50P01	DTA12xA70P01 DTA12xF70P01 DTA20xA70P01 DTA20xF70P01	DVA12xP01 DVM12xP01

QUICK REFERENCE GUIDE

Filter family	Filter series		Electrical indicator	Electrical / Visual indicator	Electronic indicator	Visual indicator	Hazardous area electronic indicator Ex
LOW & MEDIUM PRESSURE FILTERS	With bypass valve	ELIXIR® LFEX060-080-110-160	DES25HA10P01 DES25HA30P01 DES25HA80P01			DVS25HP01	
	Without bypass valve	ELIXIR® LFEX060-080-110-160	DES40HA10P01 DES40HA30P01 DES40HA80P01			DVS40HP01	
	With bypass valve	LMP 110 - 112 - 116 - 118 - 119 MULTIPORT LMP 120 - 122 - 123 MULTIPORT LMP 210 - 211 - LDP LMP 400 - 401 & 430 - 431 LMP 900 - 901 LMP 902 - 903 LMP 950 - 951 LMP 952 - 953 - 954 LMD 211 - 400 - 401 - 431 - 951 - LDD	DEA20xA50P01 DEM20xAxxP01	DLA20xA51P01 DLA20xA52P01 DLA20xA71P01 DLE20xA50P01 DLE20xF50P01	DTA20xF70P01	DVS25HP01 DVS40HP01 DVA20xP01 DVM20xP01	
	Without bypass valve	LMP 110 - 112 - 116 - 118 - 119 MULTIPORT LMP 120 - 122 - 123 MULTIPORT LMP 210 - 211 - LDP LMP 400 - 401 & 430 - 431 LMP 900 - 901 LMP 902 - 903 LMP 950 - 951 LMP 952 - 953 - 954 LMD 211 - 400 - 401 - 431 - 951 - LDD	DEA50xA50P01 DEM50xAxxP01	DLA50xA51P01 DLA50xA52P01 DLA50xA71P01 DLE50xA50P01 DLE50xF50P01	DTA50xF70P01	DVA50xP01 DVM50xP01	
HIGH PRESSURE FILTERS	With bypass valve	FMP 039 - 065 - 135 - 320 FHP 010 - 011 - 065 - 135 - 350 - 500 FMM 050 - 150 FHA 051 FHM 006 - 007 - 010 - 050 - 065 - 135 - 320 - 500 FHB 050 - 065 - 135 - 320 FHF 325 FHD 021 - 051 - 326 - 333	DEA50xA50P01 DEM50xAxxP01	DLA50xA51P01 DLA50xA52P01 DLA50xA71P01 DLE50xA50P01 DLE50xF50P01	DTA50xF70P01	DVA50xP01 DVM50xP01	DEH50xA48P01 DEH50xA49P01 DEH50xA70P01 DEH70xA48P01 DEH70xA49P01 DEH70xA70P01
	Without bypass valve	FMP 039 - 065 - 135 - 320 FHP 010 - 011 - 065 - 135 - 350 - 500 FMM 050 - 150 FHA 051 FHM 006 - 007 - 010 - 050 - 065 - 135 - 320 - 500 FHB 050 - 065 - 135 - 320 FHF 325 FHD 021 - 051 - 326 - 333	DEA70xA50P01 DEM70xAxxP01 DEA95xA50P01 DEM95xAxxP01	DLA70xA51P01 DLA70xA52P01 DLA70xA71P01 DLE70xA50P01 DLE70xF50P01 DLA95xA51P01 DLA95xA52P01 DLE95xA50P01 DLE95xF50P01	DTA70xF70P01 DTA95xF70P01	DVA70xP01 DVM70xP01 DVA95xP01 DVM95xP01	DEH50xA48P01 DEH50xA49P01 DEH50xA70P01 DEH70xA48P01 DEH70xA49P01 DEH70xA70P01
STAINLESS STEEL HIGH PRESSURE FILTERS	With bypass valve	FZH 010 - 011 - 039 FZP 039 - 136 FZX 011 FZB 039 FZM 039 FZD 051	DEX50xA50P01	DLX50xA51P01 DLX50xA52P01		DVX50xP01 DVY50xP01	DEH50xA48P01 DEH50xA49P01 DEH50xA70P01 DEH70xA48P01 DEH70xA49P01 DEH70xA70P01
	Without bypass valve	FZH 010 - 011 - 039 FZP 039 - 136 FZB 039 FZM 039 FZD 010 - 021 - 051	DEX70xA50P01 DEX95xA50P01	DLX70xA51P01 DLX70xA52P01 DLX95xA51P01		DVX70xP01 DVY70xP01 DVX95xP01 DVY95xP01	DEH50xA48P01 DEH50xA49P01 DEH50xA70P01 DEH70xA48P01 DEH70xA49P01 DEH70xA70P01

NOTES

All data, details and words contained in this publication are provided for information purposes only.
MP Filtri reserves the right to make modifications to the models and versions of the described products at any time for both technical and / or commercial reasons.
The colors and the pictures of the products are purely indicative.
Any reproduction, partial or total, of this document is strictly forbidden.
All rights are strictly reserved.

WORLDWIDE NETWORK

HEADQUARTERS

MP Filtri S.p.A.
Pessano con Bornago
Milano
Italy
sales@mpfiltri.com

BRANCH OFFICES

ITALFILTRI LLC
Moscow
Russia
mpfiltrirussia@yahoo.com

MP Filtri Canada Inc.
Concord, Ontario
Canada
sales@mpfiltricanada.com

MP Filtri France SAS
Lyon
AURA
France
sales@mpfiltrifrance.com

MP Filtri Germany GmbH
St. Ingbert
Germany
sales@mpfiltri.de

MP Filtri India Pvt. Ltd.
Bangalore
India
sales@mpfiltri.co.in

MP Filtri (Shanghai) Co., Ltd.
Shanghai
P.R. China
sales@mpfiltrishanghai.com

MP Filtri U.K. Ltd.
Bourton on the Water
Gloucestershire
United Kingdom
sales@mpfiltri.co.uk

MP Filtri U.S.A. Inc.
Quakertown, PA
U.S.A.
sales@mpfiltriusa.com

PASSION TO PERFORM

mpfiltri.com

CMPEN001G
EN - Rev. 11-2021