RETURN FILTERS

HYDRAULIC FILTRATION

CATALOGUE

MP FILTRI®

PASSION TO PERFORM

A WORLDWIDE LEADER IN THE FIELD OF HYDRAULIC FILTRATION EQUIPMENT.

Our company started life in 1964, when Bruno Pasotto decided to attempt to cater for the requests of a market still to be fully explored, with the study, design, development, production and marketing of a vast range of filters for hydraulic equipment, capable of satisfying the needs of manufacturers in all sectors. The quality of our products, our extreme competitiveness compared with major international producers and our constant activities of research, design and development has made us a worldwide leader in the field of hydraulic circuit filtering.
Present for over 50 years in the market, we have played a truly decisive role in defining our sector, and by now we are a group capable of controlling our entire chain of production, monitoring all manufacturing processes to guarantee superior quality standards and to provide concrete solutions for the rapidly evolving needs of customers and the market.

HYDRAULIC FILTRATION PRODUCTS

1 page	INTRODUCTION
2	INDEX
4	COMPANY PROFILE
8	PRODUCT RANGE
11	CONTAMINATION MANAGEMENT
22	FILTER SIZING
24	CORRECTIVE FACTOR
28	FILTER SIZING SOFTWARE

30 page	SUCTION FILTERS		up to Q_{max} l/min	up to Q_{max} gpm
33	STR & MPA - MPM	Submerged suction filter, with bypass or magnetic filter	1000	264
40	SFEX	In-line filter with plastic bowl	100	26
51	SF2 250 - 350	Semi-submerged positive head suction filter, low flow rate	160	42
59	SF2 500	Semi-submerged positive head suction filter, high flow rate	700	185
709	CLOGGING INDICATORS			

70 page	RETURN FILTERS		up to P_{max} bar	up to P_{max} psi	up to Q_{max} l/min	up to Q_{max} gpm
72	RFEX	Return filter, tank mounted filter suitable for all mineral oil and water glycol applications	16	232	260	69
82	MPFX	Tank top semi-immersed filter, standard filter element disassembly	8	116	900	238
110	MPLX	Tank top semi-immersed filter, standard filter element disassembly	10	145	1800	476
118	MPTX	Tank top semi-immersed filter, easy filter element disassembly	8	116	300	79
136	MFBX	Bowl assembly	8	116	700	185
145	MPF	Tank top semi-immersed filter, standard filter element disassembly	8	116	900	238
173	MPT	Tank top semi-immersed filter, easy filter element disassembly	8	116	300	79
191	MFB	Bowl assembly	8	116	700	185
199	MDH	Heavy industrial applications integrated in the tank - air separation	10	145	500	132
207	MPH	Tank top semi-immersed filter, standard filter element disassembly	10	145	3500	925
231	MPI	Tank top semi-immersed filter, standard filter element disassembly	10	145	3500	925
243	FRI	Tank top semi-immersed filter, easy filter element disassembly, it can be used also as in-line filter	20	290	2500	660
259	RF2	Semi-immersed under-head filter, easy filter element disassembly	20	290	615	162
266	ACCESSORIES					
710	CLOGGING INDICATORS					

268 page	RETURN / SUCTION FILTERS		up to P_{max} bar	up to P_{max} psi	up to Q_{max} l/min	up to Q_{max} gpm
270	MRSX	Unique TANK TOP filter for mobile machinery, with combined filtration on return and suction to the inlet at the hydrostatic transmissions in closed circuit	10	145	250	66
285	LMP 124 MULTIPORT	Unique IN-LINE filter for mobile machinery, with combined filtration on return and suction to the inlet at the hydrostatic transmissions in closed circuit	80	1160	120	32
712	CLOGGING INDICATORS					

292 page	SPIN-ON FILTERS		up to P_{max} bar	up to P_{max} psi	up to Q_{max} l/min	up to Q_{max} gpm
295	MPS	Low pressure filter, available with single cartridge (CS) for in-line or flange mounting or with two cartridge on the same axis on the opposite sides	12	174	365	96
311	MSH	In-line low and medium pressure filter available with single cartridge (CH)	35	508	195	52
714	CLOGGING INDICATORS					

INDEX

318 page	LOW & MEDIUM PRESSURE FILTERS		up to P_{max} bar	psi	up to Q_{max} l/min	gpm
320	LFEX	In-line filter with plastic bowl	16	232	300	79
331	LMP 110	In-line low & medium pressure filter, low to medium flow rate	80	1160	165	44
339	LMP 112 - 123 MULTIPORT	In-line filter with Multiport design for multiple choice connection	80	1160	175	46
355	LMP 210 - 211	In-line low & medium pressure filter, low flow rate	60	870	365	96
365	LPH 630	Off-line low pressure filter	10	145	1600	352
373	LMP 400 - 401 & 430 - 431	In-line low & medium pressure filter, high flow rate	60	870	780	206
385	LMP 950 - 951	In-line filter, available with 2 and up to 6 different heads	30	435	2400	634
393	LMP 952 - 953 - 954	In-line low pressure filter specifically designed to be mounted in series	25	363	4500	1189
405	LMD 211	In-line duplex medium pressure filter	60	870	200	53
413	LMD 400 - 401 & 431	In-line duplex low pressure filter	16	232	600	159
429	LMD 951	In-line duplex filter, available with 2 up to 6 different heads	16	232	1200	317
437		Filter elements designed according to DIN 24550				
439	LDP - LDD	In-line and duplex medium pressure filter	60	870	360	95
449	LMP 900 - 901	In-line low pressure filter	30	435	2000	528
457	LMP 902 - 903	In-line filter specifically designed to be mounted in series	20	290	3000	793
466	ACCESSORIES					
716	CLOGGING INDICATORS					

468 page	HIGH PRESSURE FILTERS		up to P_{max} bar	psi	up to Q_{max} l/min	gpm
470	FMMX 050	Typical high pressure filter for mobile applications, low flow rate	420	6092	154	41
479	FMM	Typical high pressure filter for mobile applications, low flow rate	420	6092	300	79
489	FHA 051	Filter optimized for use in high pressure operating systems, low flow rate	560	8122	150	40
497	FMP 039	Filter high pressure, low flow rate applications	110	1595	80	21
505	FMP	Filter high pressure, high flow rate applications	320	4641	500	132
517	FHP	Typical high pressure filter for mobile applications, high flow rate	450	6527	630	166
537	FHM	High pressure filter with intermediate manifold construction	320	4641	400	106
555	FHB	High pressure for block mounting	320	4641	485	128
569	FHF 325	In-line manifold top mounting	350	5076	550	145
579	FHD	In-line duplex high pressure filter	350	5076	250	66
593	HPB	Pressure filter kits for integration in control manifolds	420	6092	300	79
717	CLOGGING INDICATORS					

602 page	STAINLESS STEEL HIGH PRESSURE FILTERS		up to P_{max} bar	psi	up to Q_{max} l/min	gpm
605	FZP	In-line pressure filter with threaded mount	420	6092	160	42
615	FZH	In-line pressure filter with threaded mount for higher pressure	700	10153	80	21
625	FZX	In-line pressure filter with threaded mount up to 1000 bar	1000	14504	10	3
633	FZM	Manifold top mounting	320	4641	70	18
641	FZB	Manifold side mounting	320	4641	70	18
649	FZD	Duplex pressure filter for continuous operation requirements	350	5076	60	16
718	CLOGGING INDICATORS					

660 page	FILTERS FOR POTENTIALLY EXPLOSIVE ATMOSPHERE		up to P_{max} bar	psi	up to Q_{max} l/min	gpm
663	FMMX 050	Typical high pressure filter for mobile applications, low flow rate	420	6092	154	41
671	FZP	In-line pressure filter with threaded mount	700	10153	80	21
681	FZH	In-line pressure filter with threaded mount for higher pressure	1000	14504	10	3
691	FZX	In-line pressure filter with threaded mount up to 1000 bar	320	4641	70	18
719	CLOGGING INDICATORS					

699 page	CLOGGING INDICATORS
704	QUICK REFERENCE GUIDE
708	DESIGNATION AND ORDERING CODES
720	TECHNICAL DATA

MARKET **LEADER**

Our work is based on a skillful interaction between advanced technology and fine workmanship, **customizing products according to specific market requests**, focusing strongly on innovation and quality, and following every step in the manufacturing of both standard and special products, fully respecting customer expectations.

Our customer-oriented philosophy, which enables us to satisfy all customer requests **rapidly** and **with personalized products**, makes us a **dynamic and flexible enterprise**. The possibility of constantly controlling and monitoring the entire production process is essential to allow us to guarantee the quality of our products.

WORLDWIDE PRESENCE

Our foreign Branches enable us to offer a diversified range of products that allow us to successfully face the aggressive challenge of international competition, and also to maintain a stable presence at a local level.

The Group boasts **9** **business branches**

TECHNOLOGY

Our constant **quest for excellence in quality and technological innovation** allows us to offer only the best solutions and services for applications in many fields, including general industry, test rigs, lubrication, heavy engineering, renewable energies, naval engineering, offshore engineering, aviation systems, emerging technologies and mobile plant (i.e. tractors, excavators, concrete pumps, platforms).

AND PRODUCTION

Our high level of technological expertise means **we can rely entirely on our own resources, without resorting to external providers.** This in turn enables us to satisfy a growing number of customer requests, also exploiting our constantly updated range of machines and equipment, featuring **fully-automated workstations** capable of **24-hour production**.

SUCTION FILTERS

Flow rates
up to 875 l/min

Mounting:
- Tank immersed
- In-Line
- In tank with shut off valve
- In tank with flooded suction

RETURN FILTERS

Flow rates
up to 3000 l/min

Pressure
up to 20 bar

Mounting:
- In-Line
- Tank top
- In single and duplex designs

RETURN / SUCTION FILTERS

Flow rates
up to 300 l/min

Pressure
up to 80 bar

Mounting:
- In-Line
- Tank top

SPIN-ON FILTERS

Flow rates
up to 365 l/min

Pressure
up to 35 bar

Mounting:
- In-Line
- Tank top

LOW & MEDIUM PRESSURE FILTERS

Flow rates
up to 3000 l/min

Pressure
up to 80 bar

Mounting:
- In-Line
- Parallel manifold version
- In single and duplex designs

HIGH PRESSURE FILTERS

Flow rates
up to 750 l/min

Pressure from 110 bar
up to 560 bar

Mounting:
- In-Line
- Manifold
- In single and duplex designs

PRODUCT RANGE

MP Filtri can offer a vast and articulated range of products for the global market, suitable for all industrial sectors using hydraulic equipment.

This includes filters (suction, return, return/suction, spin-on, pressure, stainless steel pressure, ATEX filters) and structural components (motor/pump bell-housings, transmission couplings, damping rings, foot brackets, aluminium tanks, cleaning covers).

We can provide all the skills and solutions required by the modern hydraulics industry to monitor contamination levels and other fluid conditions.

Mobile filtration units and a full range of accessories allow us to supply everything necessary for a complete service in the hydraulic circuits.

STAINLESS STEEL HIGH PRESSURE FILTERS

Flow rates
up to 150 l/min

Pressure from 320 bar
up to 1000 bar

Mounting:
- In-Line
- Manifold
- In single and duplex designs

FILTERS FOR POTENTIALLY EXPLOSIVE ATMOSPHERE

Flow rates
up to 154 l/min

Pressure from 420 bar
up to 1000 bar

Mounting:
- In-Line

CONTAMINATION CONTROL SOLUTIONS

- Off-line, in-line particle counters
- Off-line bottle sampling products
- Fully calibrated using relevant ISO standards
- A wide range of variants to support fluid types and communication protocols
- Mobile FIltration Units with flow rates from 15 l/min up to 200 l/min

POWER TRANSMISSION PRODUCTS

- Aluminium bell-housings for motors from 0.12 kW to 400 kW
- Couplings in Aluminium Cast Iron - Steel
- Damping rings
- Foot bracket
- Aluminium tanks
- Cleaning covers

TANK ACCESSORIES

- Oil filler and air breather plugs
- Optical and electrical level gauges
- Pressure gauge valve selectors
- Pipe fixing brackets
- Pressure gauges

CONTAMINATION MANAGEMENT

INDEX

		Page
1	HYDRAULIC FLUIDS	12
2	FLUIDS CONTAMINATION	12
3	FLUIDS COMPATIBILITY CHART	12
4	EFFECTS OF CONTAMINATION ON HYDRAULIC COMPONENTS	13
5	MEASURING THE SOLID CONTAMINATION LEVEL	13
6	FILTRATION TECHNOLOGIES	16
7	RECOMMENDED CONTAMINATION CLASSES	17
8	TYPES OF FILTERS	17
9	FILTER SIZING PARAMETERS	18
10	APPLICABLE STANDARDS FOR FILTER DEVELOPMENT	18
11	WATER IN HYDRAULIC AND LUBRICATING FLUIDS	19
12	THE ANTI-STATIC FILTERS zerospark	20

1 HYDRAULIC FLUIDS

The fluid is the vector that transmits power, energy within an oleodynamic circuit. In addition to transmitting energy through the circuit, it also performs additional functions such as lubrication, protection and cooling of the surfaces.
The classification of fluids used in hydraulic systems is coded in many regulatory references, different Standards.

The most popular classification criterion divides them into the following families:
- MINERAL OILS
  Commonly used oil derived fluids.

- FIRE RESISTANT FLUIDS
  Fluids with intrinsic characteristics of incombustibility or high flash point.

- SYNTHETIC FLUIDS
  Modified chemical products to obtain specific optimized features.

- ECOLOGICAL FLUIDS
  Synthetic or vegetable origin fluids with high biodegradability characteristics.

The choice of fluid for an hydraulic system must take into account several parameters.
These parameters can adversely affect the performance of an hydraulic system, causing delay in the controls, pump cavitation, excessive absorption, excessive temperature rise, efficiency reduction, increased drainage, wear, jam/block or air intake in the plant.

The main properties that characterize hydraulic fluids and affect their choice are:
- DYNAMIC VISCOSITY
  It identifies the fluid's resistance to sliding due to the impact of the particles forming it.

- KINEMATIC VISCOSITY
  It is a widespread formal dimension in the hydraulic field.
  It is calculated with the ratio between the dynamic viscosity and the fluid density.
  Kinematic viscosity varies with temperature and pressure variations.

- VISCOSITY INDEX
  This value expresses the ability of a fluid to maintain viscosity when the temperature changes.
  A high viscosity index indicates the fluid's ability to limit viscosity variations by varying the temperature.

- FILTERABILITY INDEX
  It is the value that indicates the ability of a fluid to cross the filter materials.
  A low filterability index could cause premature clogging of the filter material.

- WORKING TEMPERATURE
  Working temperature affects the fundamental characteristics of the fluid.
  As already seen, some fluid characteristics, such as cinematic viscosity, vary with the temperature variation.
  When choosing a hydraulic oil, must therefore be taken into account of the environmental conditions in which the machine will operate.

- COMPRESSIBILITY MODULE
  Every fluid subjected to a pressure contracts, increasing its density.
  The compressibility module identifies the increase in pressure required to cause a corresponding increase in density.

- HYDROLYTIC STABILITY
  It is the characteristic that prevents galvanic pairs that can cause wear in the plant/system.

- ANTIOXIDANT STABILITY AND WEAR PROTECTION
  These features translate into the capacity of a hydraulic oil to avoid corrosion of metal elements inside the system.

- HEAT TRANSFER CAPACITY
  It is the characteristic that indicates the capacity of hydraulic oil to exchange heat with the surfaces and then cool them.

2 FLUID CONTAMINATION

Whatever the nature and properties of fluids, they are inevitably subject to contamination. Fluid contamination can have two origins:

- INITIAL CONTAMINATION
  Caused by the introduction of contaminated fluid into the circuit, or by incorrect storage, transport or transfer operations.

- PROGRESSIVE CONTAMINATION
  Caused by factors related to the operation of the system, such as metal surface wear, sealing wear, oxidation or degradation of the fluid, the introduction of contaminants during maintenance, corrosion due to chemical or electrochemical action between fluid and components, cavitation.
  The contamination of hydraulic systems can be of different nature:

- SOLID CONTAMINATION
  For example rust, slag, metal particles, fibers, rubber particles, paint particles or additives

- LIQUID CONTAMINATION
  For example, the presence of water due to condensation or external infiltration or acids

- GASEOUS CONTAMINATION
  For example, the presence of air due to inadequate oil level in the tank, drainage in suction ducts, incorrect sizing of tubes or tanks.

3 FLUID COMPATIBILITY CHARTS

For general fluid compatibility with Contamination Monitoring Products the below rules can be used:

- For mineral oils, synthetic fluids and diesel - the 'M' type variant of unit is recommended.
- For water based/ subsea fluids & 'M' type fluids - the 'N' type variant of unit is recommended.
- For Aerospace phosphate esters, Skydrols ® and aggressive fluids along with 'M' & 'N' type fluids - the 'S' type variant is recommended.

All fluids are required to be clear in appearance to allow light to penetrate unhindered.

For further and more detailed information on specific fluid compatibility please refer to the fluid compatibility list

4 EFFECTS OF CONTAMINATION ON HYDRAULIC COMPONENTS

Solid contamination is recognized as the main cause of malfunction, failure and early degradation in hydraulic systems. It is impossible to delete it completely, but it can be effectively controlled by appropriate devices.

CONTAMINATION IN PRESENCE OF LARGE TOLERANCES

CONTAMINATION IN PRESENCE OF NARROW TOLERANCES

Solid contamination mainly causes surface damage and component wear.

- ABRASION OF SURFACES
  Cause of leakage through mechanical seals, reduction of system performance, failures.

- SURFACE EROSION
  Cause of leakage through mechanical seals, reduction of system performance, variation in adjustment of control components, failures.

- ADHESION OF MOVING PARTS
  Cause of failure due to lack of lubrication.

- DAMAGES DUE TO FATIGUE
  Cause of breakdowns and components breakdown.

ABRASION

EROSION

ADHESION

FATIGUE

Liquid contamination mainly results in decay of lubrication performance and protection of fluid surfaces.

DISSOLVED WATER

- INCREASING FLUID ACIDITY
  Cause of surface corrosion and premature fluid oxidation
- GALVANIC COUPLE AT HIGH TEMPERATURES
  Cause of corrosion

FREE WATER - ADDITIONAL EFFECTS

- DECAY OF LUBRICANT PERFORMANCE
  Cause of rust and sludge formation, metal corrosion and increased solid contamination
- BATTERY COLONY CREATION
  Cause of worsening in the filterability feature
- ICE CREATION AT LOW TEMPERATURES
  Cause damage to the surface
- ADDITIVE DEPLETION
  Free water retains polar additives

Gaseous contamination mainly results in decay of system performance.

- CUSHION SUSPENSION
  Cause of increased noise and cavitation.
- FLUID OXIDATION
  Cause of corrosion acceleration of metal parts.
- MODIFICATION OF FLUID PROPERTIES
  (COMPRESSIBILITY MODULE, DENSITY, VISCOSITY)
  Cause of system's reduction of efficiency and of control.
  It is easy to understand how a system without proper contamination management is subject to higher costs than a system that is provided.
- MAINTENANCE
  Increase maintenance activities, spare parts, machine stop costs.
- ENERGY AND EFFICIENCY
  Efficiency and performance reduction due to friction, drainage, cavitation.

5 MEASURING THE SOLID CONTAMINATION LEVEL

The level of contamination of a system identifies the amount of contaminant contained in a fluid. This parameter refers to a unit volume of fluid.
The level of contamination may be different at different points in the system. From the information in the previous paragraphs it is also apparent that the level of contamination is heavily influenced by the working conditions of the system, by its working years and by the environmental conditions.

What is the size of the contaminating particles that we must handle in our hydraulic circuit?

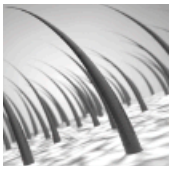

HUMAN HAIR
(75 µm)

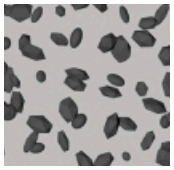

MINIMUM DIMENSION VISIBLE WITH HUMAN EYES
(40 µm)

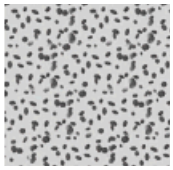

TYPICAL CONTAMINANT DIMENSION IN A HYDRAULIC CIRCUIT
(4 - 14 µm)

Contamination level analysis is significant only if performed with a uniform and repeatable method, conducted with standard test methods and suitably calibrated equipment. To this end, ISO has issued a set of standards that allow tests to be conducted and express the measured values in the following ways.

- GRAVIMETRIC LEVEL - ISO 4405

The level of contamination is defined by checking the weight of particles collected by a laboratory membrane. The membrane must be cleaned, dried and desiccated, with fluid and conditions defined by the Standard.
The volume of fluid is filtered through the membrane by using a suitable suction system. The weight of the contaminant is determined by checking the weight of the membrane before and after the fluid filtration.

CLEAN MEMBRANE

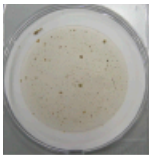

CONTAMINATED MEMBRANE

- CUMULATIVE DISTRIBUTION OF THE PARTICLES SIZE - ISO 4406

The level of contamination is defined by counting the number of particles of certain dimensions per unit of volume of fluid. Measurement is performed by Contamination Monitoring Products (CMP).
Following the count, the contamination classes are determined, corresponding to the number of particles detected in the unit of fluid.
The most common classification methods follow ISO 4406 and SAE AS 4059 (Aerospace Sector) regulations.
NAS 1638 is still used although obsolete.

Classification example according to ISO 4406

The International Standards Organization standard ISO 4406 is the preferred method of quoting the number of solid contaminant particles in a sample. The level of contamination is defined by counting the number of particles of certain dimensions per unit of volume of fluid. The measurement is performed by Contamination Monitoring Products (CMP).

The numbers represent a code which identifies the number of particles of certain sizes in 1ml of fluid. Each code number has a particular size range.
The first scale number represents the number of particles equal to or larger than 4 $\mu m_{(c)}$ per millilitre of fluid;
The second scale number represents the number of particles equal to or larger than 6 $\mu m_{(c)}$ per millilitre of fluid;
The third scale number represents the number of particles equal to or larger than 14 $\mu m_{(c)}$ per millilitre of fluid.

ISO 4406 - Allocation of Scale Numbers

Class	Number of particles per ml	
	Over	Up to
28	1 300 000	2 500 000
27	640 000	1 300 000
26	320 000	640 000
25	160 000	320 000
24	80 000	160 000
23	40 000	80 000
22	20 000	40 000
21	10 000	20 000
20	5 000	10 000
19	2 500	5 000
18	1 300	2 500
17	640	1 300
16	320	640
15	160	320
14	80	160
13	40	80
12	20	40
11	10	20
10	5	10
9	2.5	5
8	1.3	2.5
7	0.64	1.3
6	0.32	0.64
5	0.16	0.32
4	0.08	0.16
3	0.04	0.08
2	0.02	0.04
1	0.01	0.02
0	0	0.01

> 4 $\mu m_{(c)}$ = 350 particles
> 6 $\mu m_{(c)}$ = 100 particles
> 14 $\mu m_{(c)}$ = 25 particles
16 / 14 / 12

ISO 4406 Cleanliness Code System

Microscope counting examines the particles differently to Contamination Monitoring Products (CMP) and the code is given with two scale numbers only. These are at 5 µm and 15 µm equivalent to the 6 $\mu m_{(c)}$ and 14 $\mu m_{(c)}$ of Contamination Monitoring Products (CMP).

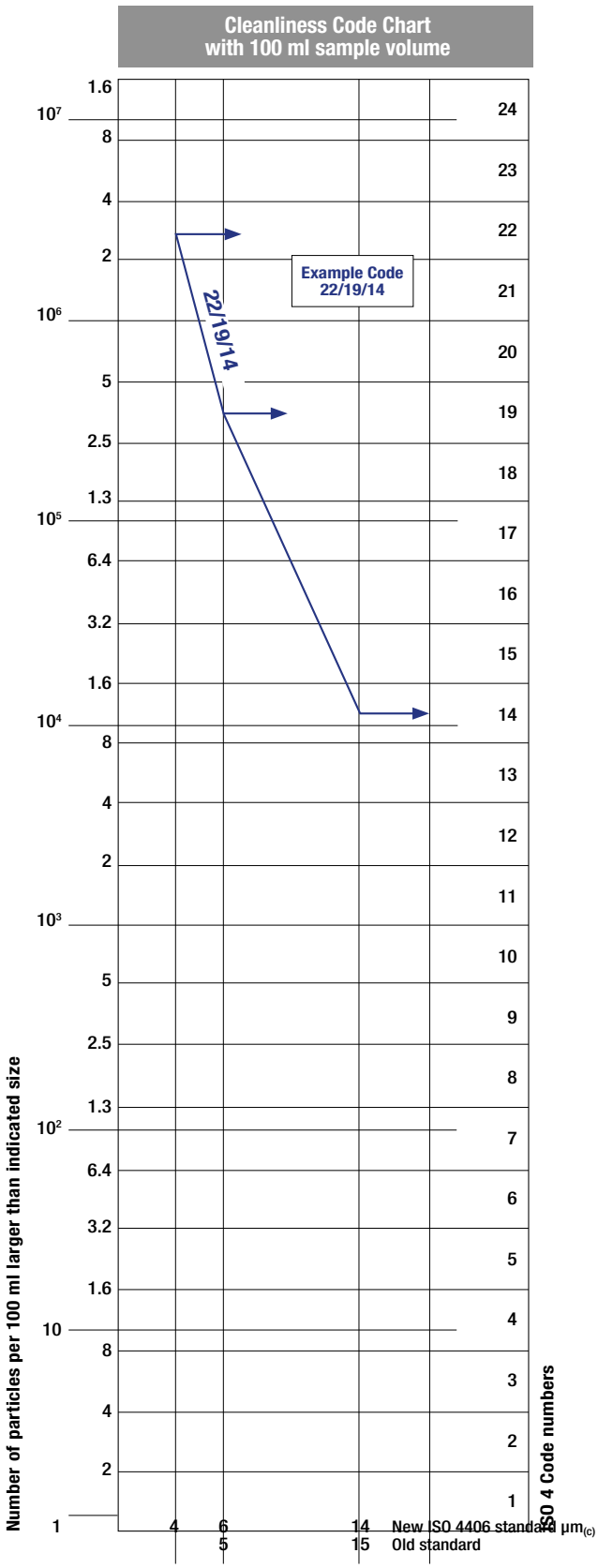

- CUMULATIVE DISTRIBUTION OF THE PARTICLES SIZE
  SAE AS4059-1 and SAE AS4059-2

Classification example according to SAE AS4059 - Rev. G

The code, prepared for the aerospace industry, is based on the size, quantity, and particle spacing in a 100 ml fluid sample. The contamination classes are defined by numeric codes, the size of the contaminant is identified by letters (A-F).

This SAE Aerospace Standard (AS) defines cleanliness levels for particulate contamination of hydraulic fluids and includes methods of reporting data relating to the contamination levels. Tables 1 and 2 below provide differential and cumulative particle counts respectively for counts obtained by an automatic particle counter, e.g. LPA3.

Table 1 - Class for differential measurement

Class	Dimension of contaminant Maximum Contamination Limits per 100 ml					
	5-15 µm	15-25 µm	25-50 µm	50-100 µm	>100 µm	(1)
	6-14 $\mu m_{(c)}$	14-21 $\mu m_{(c)}$	21-38 $\mu m_{(c)}$	38-70 $\mu m_{(c)}$	>70 $\mu m_{(c)}$	(2)
00	125	22	4	1	0	
0	250	44	8	2	0	
1	500	89	16	3	1	
2	1 000	178	32	6	1	
3	2 000	356	63	11	2	
4	4 000	712	126	22	4	
5	8 000	1 425	253	45	8	
6	16 000	2 850	506	90	16	
7	32 000	5 700	1 012	180	32	
8	64 000	11 400	2 025	360	64	
9	128 000	22 800	4 050	720	128	
10	256 000	45 600	8 100	1 440	256	
11	512 000	91 200	16 200	2 880	512	
12	1 024 000	182 400	32 400	5 760	1 024	

6 - 14 $\mu m_{(c)}$ = 15 000 particles
14 - 21 $\mu m_{(c)}$ = 2 200 particles
21 - 38 $\mu m_{(c)}$ = 200 particles
38 - 70 $\mu m_{(c)}$ = 35 particles
> 70 $\mu m_{(c)}$ = 3 particles
SAE AS4059 REV G - Class 6

(1) Size range, optical microscope, based on longest dimension as measured per AS598 or ISO 4407. **(2)** Size range CMP calibrated per ISO 11171 or an optical or electron microscope with image analysis software, based on projected area equivalent diameter. **(3)** Contamination classes and particle count limits are identical to NAS 1638.

Table 2 - Class for cumulative measurement

Class	Dimension of contaminant Maximum Contamination Limits per 100 ml						
	>1 µm	>5 µm	>15 µm	>25 µm	>50 µm	>100 µm	(1)
	>4 $\mu m_{(c)}$	>6 $\mu m_{(c)}$	>14 $\mu m_{(c)}$	>21 $\mu m_{(c)}$	>38 $\mu m_{(c)}$	>70 $\mu m_{(c)}$	(2)
000	195	76	14	3	1	0	
00	390	152	27	5	1	0	
0	780	304	54	10	2	0	
1	1 560	609	109	20	4	1	
2	3 120	1 217	217	39	7	1	
3	6 250	2 432	432	76	13	2	
4	12 500	4 864	864	152	26	4	
5	25 000	9 731	1 731	306	53	8	
6	50 000	19 462	3 462	612	106	16	
7	100 000	38 924	6 924	1 224	212	32	
8	200 000	77 849	13 849	2 449	424	64	
9	400 000	155 698	27 698	4 898	848	128	
10	800 000	311 396	55 396	9 796	1 696	256	
11	1 600 000	622 792	110 792	19 592	3 392	512	
12	3 200 000	1 245 584	221 584	39 184	6 784	1 024	

> 4 $\mu m_{(c)}$ = 45 000 particles
> 6 $\mu m_{(c)}$ = 15 000 particles
> 14 $\mu m_{(c)}$ = 1 500 particles
> 21 $\mu m_{(c)}$ = 250 particles
> 38 $\mu m_{(c)}$ = 15 particles
> 70 $\mu m_{(c)}$ = 3 particle
SAE AS4059 REV G
cpc* Class 6 6/6/5/5/4/2

* cumulative particle count

(1) Size range, optical microscope, based on longest dimension as measured per AS598 or ISO 4407. **(2)** Size range, CMP calibrated per ISO 11171 or an optical or electron microscope with image analysis software, based on projected area equivalent diameter. **(3)** Contamination classes and particle count limits are identical to NAS 1638.

- CLASSES OF CONTAMINATION ACCORDING TO NAS 1638 (January 1964)

The NAS system was originally developed in 1964 to define contamination classes for the contamination contained within aircraft components.
The application of this standard was extended to industrial hydraulic systems simply because nothing else existed at the time.
The coding system defines the maximum numbers permitted of 100 ml volume at various size intervals (differential counts) rather than using cumulative counts as in ISO 4406. Although there is no guidance given in the standard on how to quote the levels, most industrial users quote a single code which is the highest recorded in all sizes and this convention is used on MP Filtri Contamination Monitoring Products (CMP).

The contamination classes are defined by a number (from 00 to 12) which indicates the maximum number of particles per 100 ml, counted on a differential basis, in a given size bracket.

Size Range Classes (in microns)

Maximum Contamination Limits per 100 ml					
Class	5-15	15-25	25-50	50-100	>100
00	125	22	4	1	0
0	250	44	8	2	0
1	500	89	16	3	1
2	1 000	178	32	6	1
3	2 000	356	63	11	2
4	4 000	712	126	22	4
5	8 000	1 425	253	45	8
6	16 000	2 850	506	90	16
7	32 000	5 700	1 012	180	32
8	64 000	11 400	2 025	360	64
9	128 000	22 800	4 050	720	128
10	256 000	45 600	8 100	1 440	256
11	512 000	91 200	16 200	2 880	512
12	1 024 000	182 400	32 400	5 760	1 024

5-15 µm = 42 000 particles
15-25 µm = 2 200 particles
25-50 µm = 150 particles
50-100 µm = 18 particles
> 100 µm = 3 particles
Class NAS 8

- CUMULATIVE DISTRIBUTION OF THE PARTICLES SIZE - ISO 4407

The level of contamination is defined by counting the number of particles collected by a laboratory membrane per unit of fluid volume. The measurement is done by a microscope. The membrane must be cleaned, dried and desiccated, with fluid and conditions defined by the Standard. The fluid volume is filtered through the membrane, using a suitable suction system.
The level of contamination is identified by dividing the membrane into a predefined number of areas and by counting the contaminant particles using a suitable laboratory microscope.

MICROSCOPE CONTROL
AND MEASUREMENT

Example figure 1and 2

COMPARISON PHOTOGRAPH'S
1 graduation = 10µm

Fig. 1

Fig. 2

For other comparison photographs for contamination classes see the "*Fluid Condition and Filtration Handbook*".

- CLEANLINESS CODE COMPARISON

Although ISO 4406 standard is being used extensively within the hydraulics industry other standards are occasionally required and a comparison may be requested. The table below gives a very general comparison but often no direct comparison is possible due to the different classes and sizes involved.

ISO 4406	SAE AS4059 Table 2	SAE AS4059 Table 1	NAS 1638
> 4 $\mu m_{(c)}$ 6 $\mu m_{(c)}$ 14 $\mu m_{(c)}$	> 4 $\mu m_{(c)}$ 6 $\mu m_{(c)}$ 14 $\mu m_{(c)}$	4-6 6-14 14-21 21-38 38-70 >70	5-15 15-25 25-50 50-100 >100
23 / 21 / 18	13A / 12B / 12C	12	12
22 / 20 / 17	12A / 11B / 11C	11	11
21 / 19 / 16	11A / 10B / 10C	10	10
20 / 18 / 15	10A / 9B / 9B	9	9
19 / 17 / 14	9A / 8B / 8C	8	8
18 / 16 / 13	8A / 7B / 7C	7	7
17 / 15 / 12	7A / 6B / 6C	6	6
16 / 14 / 11	6A / 5B / 5C	5	5
15 / 13 / 10	5A / 4B / 4C	4	4
14 / 12 / 09	4A / 3B / 3C	3	3

6 FILTRATION TECHNOLOGIES

Various mechanisms such as mechanical stoppage, magnetism, gravimetric deposit, or centrifugal separation can be used to reduce the level of contamination.
The mechanical stoppage method is most effective and can take place in two ways:

- SURFACE FILTRATION
  It is by direct interception. The filter prevents particles larger than the pores from continuing in the plant / system. Surface filters are generally manufactured with metal canvases or meshes.

- DEPTH FILTERING
  Filters are constructed by fiber interlacing. Such wraps form pathways of different shapes and sizes in which the particles remain trapped when they find smaller apertures than their diameter.
  Depth filters are generally produced with papers impregnated with phenolic resins, metal fibers or inorganic fibers.
  In inorganic fiber filtration, commonly called microfibre, the filtering layers are often overlapped in order to increase the ability to retain the contaminant.

WIRE MESH FILTRATION

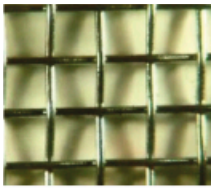

PAPER FILTRATION

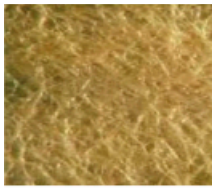

MICROFIBER FILTRATION

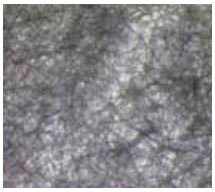

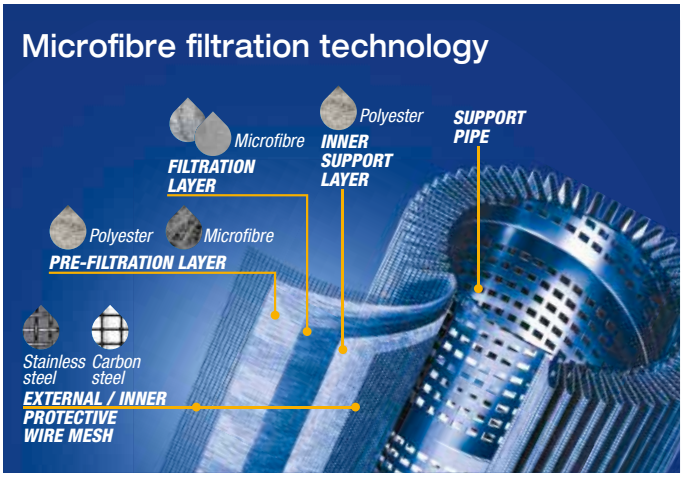

The filtration efficiency of metallic mesh filtrations is defined as the maximum particle size that can pass through the meshes of the filtering grid.
The efficiency of microfibre and paper filtration ($\beta_{x(c)}$) is defined through a lab test called Multipass Test. The efficiency value ($\beta_{x(c)}$) is defined as the ratio between the number of particles of certain dimensions detected upstream and downstream of the filter.

$$\frac{\text{Upstream particles number} > X\ \mu m_{(c)}}{\text{Downstream particles number} > X\ \mu m_{(c)}} = \beta_{x(c)}$$

Value ($\beta_{x(c)}$)	2	10	75	100	200	1000
Efficiency	50%	90%	98.7%	99%	99.5%	99.9%

Test conditions, such as type of fluid to be used (MIL-H-5606), type of contaminant to be used (ISO MTD), fluid viscosity, test temperature, are determined by ISO 16889.
In addition to the filtration efficiency value during the Multipass test, other important features, such as filtration stability (β stability) and dirt holding capacity (DHC), are also tested.
Poor filtration stability is the cause of the filtering quality worsening as the filter life rises. Low dirt holding capacity causes a reduction in the life of the filter.

Filtration ISO Standard Comparison		
$\beta_{x(c)}$ > 1000 ISO 16889	β_x > 200 ISO 4572	MP Filtri Filter media code
5 $\mu m_{(c)}$	3 µm	A03
7 $\mu m_{(c)}$	6 µm	A06
10 $\mu m_{(c)}$	10 µm	A10
16 $\mu m_{(c)}$	18 µm	A16
21 $\mu m_{(c)}$	25 µm	A25

7 RECOMMENDED CONTAMINATION CLASSES

Any are the nature and the properties of fluids, they are inevitably subject to contamination. The level of contamination can be managed by using special components called filters.
Hydraulic components builders, knowing the problem of contamination, recommend the filtration level appropriate to the use of their products.

Example of recommended contamination levels for pressures below 140 bar.

Piston pumps with fixed flow rate	•					
Piston pumps with variable flow rate			•			
Vane pumps with fixed flow rate		•				
Vane pumps with variable flow			•			
Engines	•					
Hydraulic cylinders	•					
Actuators					•	
Test benches						•
Check valve	•					
Directional valves	•					
Flow regulating valves	•					
Proportional valves				•		
Servo-valves					•	
Flat bearings			•			
Ball bearings				•		
ISO 4406 CODE	20/18/15	19/17/14	18/16/13	17/15/12	16/14/11	15/13/10
Recommended filtration $\beta_{x(c)} \geq 1.000$	$\beta_{21(c)}$ >1000	$\beta_{15(c)}$ >1000	$\beta_{10(c)}$ >1000	$\beta_{7(c)}$ >1000	$\beta_{7(c)}$ >1000	$\beta_{5(c)}$ >1000
MP Filtri media code	A25	A16	A10	A06	A06	A03

The common classification of filters is determined by their position in the plant.

8 TYPES OF FILTERS

Suction filters
They are positioned before the pump and are responsible for protecting the pump from dirty contaminants. It also provides additional flow guidance to the pump suction line.
Being subject to negligible working pressures are manufactured with simple and lightweight construction.
They are mainly produced with gross grade surface filtrations, mainly 60 ÷ 125 µm.
They can be equipped with a magnetic filter for retaining ferrous particles.
They are generally placed under the fluid head to take advantage of the piezometric thrust of the fluid and reduce the risk of cavitation.

There are two types of suction filters:
- IMMERSION FILTERS
  Simple filter element screwed on the suction pipe

- FILTERS WITH CONTAINER
  Container filters that are more bulky, but provide easier maintenance of the tank

Delivery (or Pressure) filters
They are positioned between the pump and most sensitive regulating and controlling components, such as servo valves or proportional valves, and are designed to ensure the class of contamination required by the components used in the circuit.
Being subjected to high working pressures are manufactured with more robust and articulated construction. In particular situations of corrosive environments or aggressive fluids can be made of stainless steel.
They are mainly produced with filtering depths of 3 ÷ 25 µm.
They can be manufactured with in-line connections, with plate or flange connections or directly integrated into the circuit control blocks / manifolds.
They can also be manufactured in duplex configuration to allow the contaminated section to be maintained even when the plant / system is in operation without interruption of the working cycle.

Return filters
They are positioned on the return line to the tank and perform the task of filtering the fluid from particles entering the system from the outside or generated by the wear of the components.
They are generally fixed to the reservoir (for this reason also called top tank mounted), positioned semi-immersed or completely immersed.
The positioning of the return filters must guarantee in all operating conditions that the fluid drainage takes place in immersed condition; this is to avoid creating foams in the tank that can cause malfunctions or cavitation in the pumps.
For the sizing of the return filters, account must be taken of the presence of accumulators or cylinders that can make the return flow considerably greater than the pump suction flow rate.
Being subject to contained working pressures are manufactured with simple and lightweight construction.
Normally it is possible to extract the filter element without disconnecting the filter from the rest of the system.

Combined filters
They are designed to be applied to systems with two or more circuits. They are commonly used in hydrostatic transmission machines where they have a dual filtration function of the return line and suction line of the hydrostatic transmission pump.
The filter is equipped with a valve that keeps the 0.5 bar pressure inside the filter. A portion of the fluid that returns to the tank is filtered by the return filter element, generally produced with absolute filtration, and returns to the transmission booster pump.
Only excess fluid returns to the tank through the valve.
The internal pressure of the filter and the absolute filtration help to avoid the cavitation phenomenon inside the pump.

Off-line filters
They are generally used in very large systems / plants, placed in a closed circuit independent from the main circuit. They remain in operation regardless of the operation of the main circuit and are crossed by a constant flow rate.
They can also be manufactured in duplex configuration to allow the contaminated section to be maintained even when the unit is in operation without interruption of the work cycle.

Venting filters
During the operation of the plants, the fluid level present in the reservoir changes continuously.
The result of this continuous fluctuation is an exchange of air with the outside environment.
The venting filter function, positioned on the tank, is to filter the air that enters the tank to compensate for fluid level variations.

9 FILTER SIZING PARAMETERS

The choice of the filter system for an hydraulic system is influenced by several factors.
It is necessary to consider the characteristics of the various components present in the plant and their sensitivity to contamination.

It is also necessary to consider all the tasks that the filter will have to do within the plant:
- FLUID PROTECTION FROM CONTAMINATION
- PROTECTION OF OLEODYNAMIC COMPONENTS SENSITIVE TO CONTAMINATION
- PROTECTION OF OLEODYNAMIC PLANTS FROM ENVIRONMENTAL WASTE
- PROTECTION OF OLEODYNAMIC PLANTS FROM CONTAMINATION CAUSED BY COMPONENTS' FAILURES

The advantages of proper positioning and sizing of the filters are
- MORE RELIABILITY OF THE SYSTEM
- LONGER LIFE OF THE FLUID COMPONENTS
- REDUCTION OF STOP TIME
- REDUCTION OF FAILURE CASUALITIES

Each hydraulic filter is described by general features that identify the possibility of use in different applications.

- *MAXIMUM WORKING PRESSURE (Pmax)*
  The maximum working pressure of the filter must be greater than or equal to the pressure of the circuit section in which it will be installed.

- *PRESSURE DROP (ΔP)*
  The pressure drop depends on a number of factors, such as the working circuit temperature, the fluid viscosity, the filter element cleaning condition.

- *WORKING TEMPERATURE (T)*
  The working temperature deeply affect the choice of materials. Excessively high or low temperatures may adversely affect the strength of the materials or the characteristics of the seals.

- *FILTRATION EFFICIENCY (%) / FILTRATION RATIO ($ß_{x(c)}$)*
  Filtration efficiency is the most important parameter to consider when selecting a filter.
  When choosing the filtration performances, the needs of the most sensitive components in the system must be considered.

- *FLUID TYPE*
  The type of fluid influences the choice of filters in terms of compatibility and viscosity. It is always mandatory to check the filterability.

- *PLACEMENT IN THE PLANT*
  The position of the filter in the system conditions the efficiency of all filter performances.

10 APPLICABLE STANDARDS FOR FILTER DEVELOPMENT

In order to obtain unique criteria for development and verification of the filters performance, specific regulations for the filters and filter elements testing have been issued by ISO. These norms describe the target, the methodology, the conditions and the presentation methods for the test results.

ISO 2941
Hydraulic fluid power -- Filter elements -- Verification of collapse/burst pressure rating
This Standard describes the method for testing the collapse / burst resistance of the filter elements.
The test is performed by crossing the contaminated fluid filter element at a predefined flow rate. The progressive clogging of the filter element, determined by contamination, causes an increase in differential pressure.

ISO 2942
Hydraulic fluid power -- Filter elements -- Verification of fabrication integrity and determination of the first bubble point
This Standard describes the method to verify the integrity of the assembled filter elements.
It can be used to verify the quality of the production process or the quality of the materials by verifying the pressure value of the first bubble point.

ISO 2943
Hydraulic fluid power -- Filter elements -- Verification of material compatibility with fluids
This Standard describes the method to verify the compatibility of materials with certain hydraulic fluids.
The test is carried out by keeping the element (the material sample) immersed in the fluid under high or low temperature conditions for a given period of time and verifying the retention of the characteristics.

ISO 3723
Hydraulic fluid power -- Filter elements -- Method for end load test
This Standard describes the method for verifying the axial load resistance of the filter elements.
After performing the procedure described in ISO 2943, the designed axial load is applied to the filter element. To verify the test results, then the test described in ISO 2941 is performed.

ISO 3968
Hydraulic fluid power -- Filters -- Evaluation of differential pressure versus flow characteristics
This Standard describes the method for checking the pressure drop across the filter.
The test is carried out by crossing the filter from a given fluid and by detecting upstream and downstream pressures.
Some of the parameters defined by the Standard are the fluid, the test temperature, the size of the tubes, the position of the pressure detection points.

ISO 16889
Hydraulic fluid power -- Filters -- Multi-pass method for evaluating filtration performance of a filter element
This Standard describes the method to check the filtration characteristics of the filter elements.
The test is performed by constant introduction of contaminant (ISO MTD).
The characteristics observed during the test are the filtration efficiency and the dirty holding capacity related to the differential pressure.

ISO 23181

Hydraulic fluid power -- Filter elements -- Determination of resistance to flow fatigue using high viscosity fluid

This Standard describes the method for testing the fatigue resistance of the filter elements. The test is carried out by subjecting the filter to continuous flow variations, thus differential pressure, using a high viscosity fluid.

ISO 11170

Hydraulic fluid power -- Sequence of tests for verifying performance characteristics of filter elements

The Standard describes the method for testing the performance of filter elements. The protocol described by the regulations provides the sequence of all the tests described above in order to verify all the working characteristics (mechanical, hydraulic and filtration).

ISO 10771-1

Hydraulic fluid power -- Fatigue pressure testing of metal pressure-containing envelopes -- Test method

This Standard describes the method to check the resistance of the hydraulic components with pulsing pressure.
It can be applied to all metal components (excluding tubes) subject to cyclic pressure used in the hydraulic field.

11 WATER IN HYDRAULIC AND LUBRICATING FLUIDS

Water Content

In mineral oils and non aqueous resistant fluids water is undesirable. Mineral oil usually has a water content of 50-300 ppm (@40°C) which it can support without adverse consequences.
Once the water content exceeds about 300ppm the oil starts to appear hazy. Above this level there is a danger of free water accumulating in the system in areas of low flow. This can lead to corrosion and accelerated wear.
Similarly, fire resistant fluids have a natural water which may be different to mineral oil.

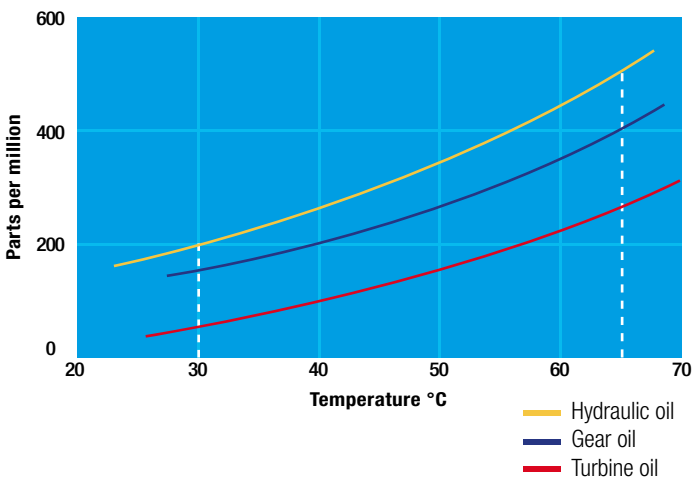

Saturation Levels

Since the effects of free (also emulsified) water is more harmful than those of dissolved water, water levels should remain well below the saturation point.

However, even water in solution can cause damage and therefore every reasonable effort should be made to keep saturation levels as low as possible. There is no such thing as too little water. As a guideline, we recommend maintaining saturation levels below 50% in all equipment.

TYPICAL WATER SATURATION LEVEL FOR NEW OILS
Examples:
Hydraulic oil @ 30°C = 200 ppm = 100% saturation
Hydraulic oil @ 65°C = 500 ppm = 100% saturation

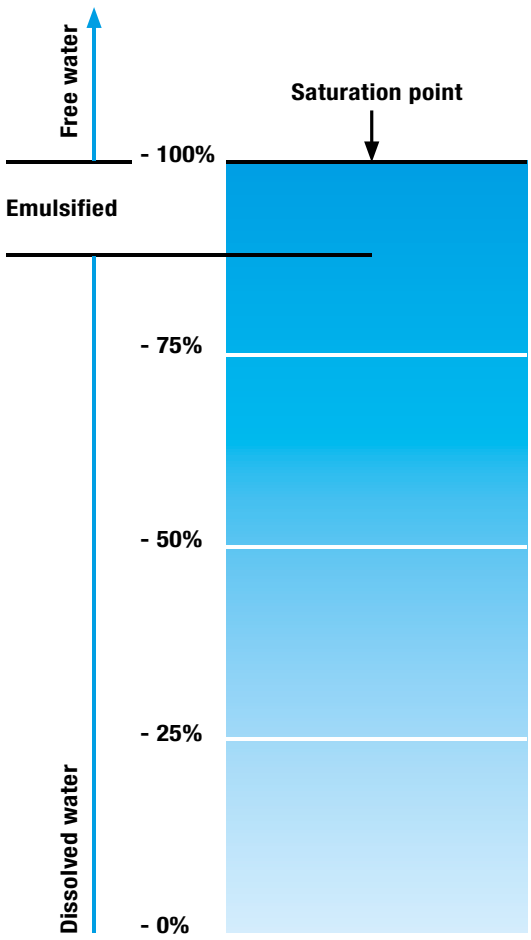

WATER REMOVAL

Water is present everywhere, during storage, handling and servicing.

MP Filtri filter elements feature an absorbent media which protects hydraulic systems from both particulate and water contamination.
MP Filtri's filter element technology is available with inorganic microfiber media with a filtration rating 25 µm (therefore identified with media designation WA025), providing absolute filtration of solid particles to $\beta_{x(c)} = 1000$.
Absorbent media is made by water absorbent fibres which increase in size during the absorption process.
Free water is thus bonded to the filter media and completely removed from the system (it cannot even be squeezed out).

Filter Media

Fabric that absorbs water

Absorber media layer

The Filter Media has absorbed water

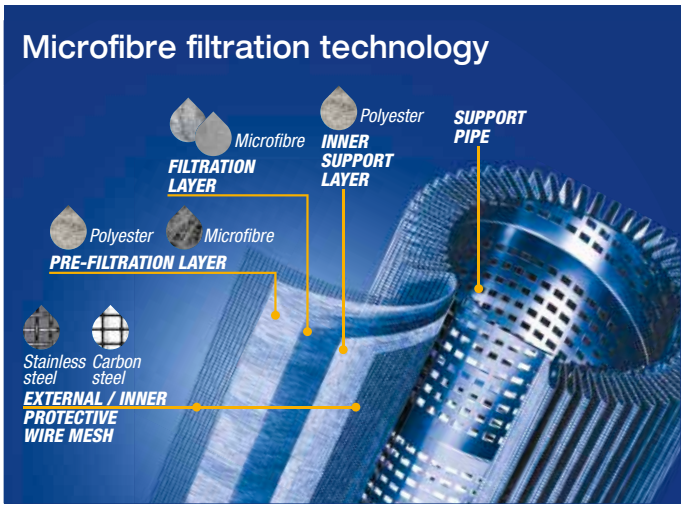

By removing water from your fluid power system, you can prevent such key problems as:
- corrosion (metal etching)
- loss of lubricant power
- accelerated abrasive wear in hydraulic components
- valve-locking
- bearing fatigue
- viscosity variance (reduction in lubricating properties)
- additive precipitation and oil oxidation
- increase in acidity level
- increased electrical conductivity (loss of dielectric strength)
- slow/weak response of control systems

For more details please refer to our dedicate brochure "WATER REMOVAL"

12 THE ANTI-STATIC FILTERS

zerospark®

zerospark is a specialist solution designed to solve the problem of electrostatic discharge inside hydraulic filters. Caused by the electrical charge build-up due to the passage of oil through the filters, this can result in damage to filter elements, oils and circuit components. It can even cause fire hazards in environments where flammable materials are present.

THE TRIBOELECTRIC EFFECT
The body with the most electronegativity strips electrons from the other, generating a build-up of a net negative charge on itself. The other body is charged by the same amount but with the opposite sign, giving rise to very high potential differences. These, if not dissipated, can give rise to electrostatic discharges.

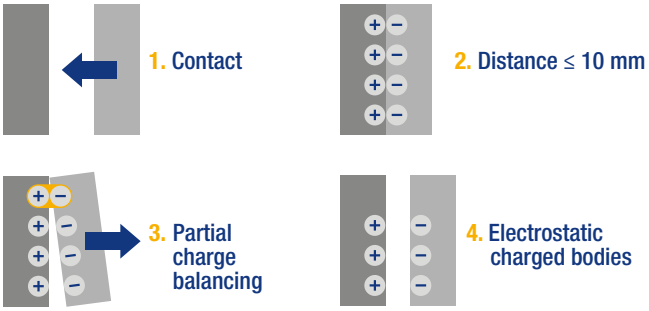

For more details please refer to our dedicate brochure "ZEROSPARK"

FILTER SIZING

INDEX

	Page
CALCULATION	22
CORRECTIVE FACTOR	23

THE CORRECT FILTER SIZING HAS TO BE BASED ON THE TOTAL PRESSURE DROP DEPENDING ON THE APPLICATION.
FOR EXAMPLE, THE MAXIMUM TOTAL PRESSURE DROP ALLOWED BY A NEW AND CLEAN RETURN FILTER HAS TO BE IN THE RANGE 0.4 - 0.6 bar / 5.80 - 8.70 psi.

The pressure drop calculation is performed by adding together the value of the housing with the value of the filter element. The pressure drop Δpc of the housing is proportional to the fluid density (kg/dm³ / lb/ft³).
The filter element pressure drop Δpe is proportional to its viscosity (mm²/s / SUS), the corrective factor Y have to be used in case of an oil viscosity different than 30 mm²/s (cSt) / 150 SUS.

Sizing data for single filter element, head at top

Δpc = Filter housing pressure drop [bar / psi]
Δpe = Filter element pressure drop [bar / psi]
Y = Corrective factor Y (see correspondent table), depending on the filter type, on the filter element size, on the filter element length and on the filter media
Q = flow rate (l/min - gpm)
V1 reference oil viscosity = 30 mm²/s (cSt) /150 SUS
V2 = operating oil viscosity in mm²/s (cSt) / SUS

Filter element pressure drop calculation with an oil viscosity different than 30 mm²/s (cSt) / 150 SUS

International system:
Δpe = Y : 1000 x Q x (V2:V1)

Imperial system:
Δpe = Y : 17.2 x Q x (V2:V1)

Δp Tot. = Δpc + Δpe

Verification formula

Δp Tot. ≤ Δp max allowed

Maximum total pressure drop (Δp max) allowed by a new and clean filter

Filter family	Δp max	
	[bar]	[psi]
Suction	0.08 bar	1.15 psi
Return	0.50 bar	7.25 psi
Return - Suction (*)	1.50 bar	22.00 psi
Low & Medium Pressure/Duplex	0.70 bar	10.15 psi
High Pressure Pressure/Duplex	1.50 bar	22.00 psi
Stainless Steel	1.50 bar	22.00 psi
ATEX	1.50 bar	22.00 psi

(*) The suction flow rate should not exceed 30% of the return flow rate

Generic filter calculation example

Application data:
Tank top return filter
Pressure Pmax = 10 bar / 145.03 psi
Flow rate Q = 120 l/min / 31.7 gpm
Viscosity V2 = 46 mm²/s (cSt) / 216 SUS
Oil density = 0.86 kg/dm³ / 53.68 lb/ft³
Required filtration efficiency = 25 µm with absolute filtration
With bypass valve and G 1 1/4" inlet connection

Calculation:
Δpc = 0.03 bar / 0.43 psi (see graphic below)

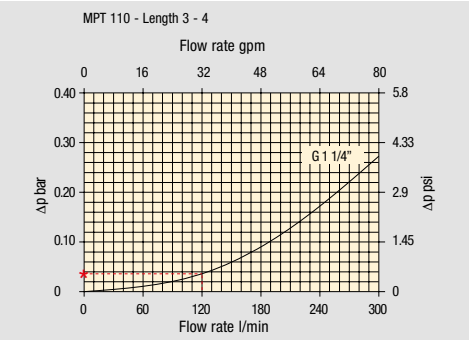

Filter housings Δp pressure drop.
The curves are plotted using mineral oil with density of 0.86 kg/dm³ in compliance with ISO 3968.
Δp varies proportionally with density.

Δpe = (2.00 : 1000) x 120 x (46 : 30) = 0.37 bar
Δpe = (2.00 : 17.2) x 32 x (216 : 150) = 5.36 psi

Filter element		Absolute filtration H Series					Nominal filtration N Series		
Type		A03	A06	A10	A16	A25	P(00)10	P(00)25	M(00)25 M(00)60 M(00)90
Return filters		74.00	50.08	20.00	16.00	9.00	6.43	5.51	4.40
MF 020	2	29.20	24.12	8.00	7.22	5.00	3.33	2.85	2.00
	3	22.00	19.00	6.56	5.33	4.33	1.68	1.44	1.30
MF 030 MFX 030	1	74.00	50.08	20.00	16.00	9.00	6.43	5.51	3.40
MF 100 MFX 100	1	28.20	24.40	8.67	8.17	6.88	4.62	3.96	1.25
	2	17.33	12.50	6.86	5.70	4.00	3.05	2.47	1.10
	3	10.25	9.00	3.65	3.33	2.50	1.63	1.32	0.96
	4	6.10	5.40	2.30	2.20	2.00	1.19	0.96	0.82

Δp Tot. = 0.03 + 0.37 = 0.4 bar
Δp Tot. = 0.43 + 5.36 = 5.79 psi

The selection is correct because the total pressure drop value is inside the admissible range for top tank return filters.
In case the allowed max total pressure drop is not verified, it is necessary to repeat the calculation changing the filter length/size.

SUCTION FILTERS

Filter element		Nominal filtration Collapse ΔP : A = 1 bar					
Type	Length	P10	P25	M25	M60	M90	M250
SF 250	1	78.00	48.00	28.00	24.00	9.33	9.33
SF 503	2	25.88	20.88	10.44	10.00	3.78	3.78
SF 504	3	15.20	14.53	5.14	4.95	2.00	2.00
SF 505	4	3.25	2.55	1.55	1.35	0.71	0.71
SF 510	5	1.96	1.68	0.85	0.72	0.24	0.24
SF 535	2	1.06	0.84	0.42	0.33	0.17	0.17
SF 540	4	1.06	0.84	0.42	0.33	0.17	0.17
FEX 060	-	4.58	3.22	1.02	0.89	0.63	0.63
FEX 080	-	1.97	1.38	0.62	0.45	0.29	0.29
FEX 110	-	1.33	1.12	0.22	0.18	0.14	0.14
FEX 160	-	0.90	0,76	0.15	0.10	0.09	0.09

RETURN FILTERS

Filter element		Absolute filtration H Series					Nominal filtration N Series		
Type	Length	A03	A06	A10	A16	A25	P10	P25	M25 - M60 - M90
MF 020	1	74.00	50.08	20.00	16.00	9.00	6.43	5.51	4.40
	2	29.20	24.12	8.00	7.22	5.00	3.33	2.85	2.00
	3	22.00	19.00	6.56	5.33	4.33	1.68	1.44	1.30
MF 030 MFX 030	1	74.00	50.08	20.00	16.00	9.00	6.43	5.51	3.40
MF 100 MFX 100	1	28.20	24.40	8.67	8.17	6.88	4.62	3.96	1.25
	2	17.33	12.50	6.86	5.70	4.00	3.05	2.47	1.10
	3	10.25	9.00	3.65	3.33	2.50	1.63	1.32	0.96
	4	6.10	5.40	2.30	2.20	**2.00**	1.19	0.96	0.82
MF 180 MFX 180	1	3.67	3.05	1.64	1.56	1.24	1.18	1.06	0.26
	2	1.69	1.37	0.68	0.54	0.51	0.43	0.39	0.12
MF 190 MFX 190	2	1.69	1.37	0.60	0.49	0.44	0.35	0.31	0.11
MF 400 MFX 400	1	3.20	2.75	1.39	1.33	1.06	0.96	0.87	0.22
	2	2.00	1.87	0.88	0.85	0.55	0.49	0.45	0.13
	3	1.90	1.60	0.63	0.51	0.49	0.39	0.35	0.11
MF 750 MFX 750	1	1.08	0.84	0.49	0.36	0.26	0.21	0.19	0.06
MLX 250	2	3.00	3.04	1.46	1.25	1.17	-	-	M25 0.20
MLX 660	2	1.29	1.26	0.52	0.44	0.38	-	-	M25 0.10
CU 025		78.00	48.00	28.00	24.00	9.33	9.33	8.51	1.25
CU 040		25.88	20.88	10.44	10.00	3.78	3.78	3.30	1.25
CU 100		15.20	14.53	5.14	4.95	2.00	2.00	0.17	1.10
CU 250		3.25	2.55	1.55	1.35	0.71	0.71	0.59	0.25
CU 630		1.96	1.68	0.85	0.72	0.24	0.42	0.36	0.09
CU 850		1.06	0.84	0.42	0.33	0.17	0.17	0.13	0.04

TO BE CONTINUED >>

Corrective factor Y to be used for the filter element pressure drop calculation. The values depend to the filter size and length and to the filter media.
Reference oil viscosity 30 mm²/s

FILTER SIZING Corrective factor

RETURN FILTERS

Filter element		Absolute filtration H Series					Nominal filtration N Series		
Type	Length	A03	A06	A10	A16	A25	P10	P25	M25 - M60 - M90
									M25
MR 250	2	3.61	4.08	1.81	1.71	1.35	-	-	0.55
	4	2.10	1.70	1.14	0.77	0.53	-	-	0.60
MR 100	1	19.00	17.00	6.90	6.30	4.60	2.94	2.52	1.60
	2	11.70	10.80	4.40	4.30	3.00	2.94	2.52	1.37
	3	7.80	6.87	3.70	3.10	2.70	2.14	1.84	1.34
	4	5.50	4.97	2.60	2.40	2.18	1.72	1.47	1.34
	5	4.20	3.84	2.36	2.15	1.90	1.60	1.37	1.34
MR 250	1	5.35	4.85	2.32	1.92	1.50	1.38	1.20	0.15
	2	4.00	3.28	1.44	1.10	1.07	0.96	0.83	0.13
	3	2.60	2.20	1.08	1.00	0.86	0.77	0.64	0.12
	4	1.84	1.56	0.68	0.56	0.44	0.37	0.23	0.11
MR 630	1	3.10	2.48	1.32	1.14	0.92	0.83	0.73	0.09
	2	2.06	1.92	0.82	0.76	0.38	0.33	0.27	0.08
	3	1.48	1.30	0.60	0.56	0.26	0.22	0.17	0.08
	4	1.30	1.20	0.48	0.40	0.25	0.21	0.16	0.08
	5	0.74	0.65	0.30	0.28	0.13	0.10	0.08	0.04
MR 850	1	0.60	0.43	0.34	0.25	0.13	0.12	0.09	0.03
	2	0.37	0.26	0.23	0.21	0.11	0.08	0.07	0.03
	3	0.27	0.18	0.17	0.17	0.05	0.04	0.04	0.02
	4	0.23	0.16	0.13	0.12	0.04	0.03	0.03	0.02

RETURN / SUCTION FILTERS

Filter element		Absolute filtration		
Type	Length	A10	A16	A25
RSX 116	1	5.12	4.33	3.85
	2	2.22	1.87	1.22
RSX 165 RSX 166	1	2.06	1.75	1.46
	2	1.24	1.05	0.96
	3	0.94	0.86	0.61

Filter element		Absolute filtration N Series							
Type	Length	A03	A06	A10	A16	A25	P10	P25	M25 - M60 - M90
CU 110	1	16.25	15.16	8.75	8.14	5.87	2.86	2.65	0.14
	2	12.62	10.44	6.11	6.02	4.16	1.60	1.49	0.12
	3	8.57	7.95	5.07	4.07	2.40	1.24	1.15	0.11
	4	5.76	4.05	4.05	2.36	1.14	0.91	0.85	0.05

Corrective factor Y to be used for the filter element pressure drop calculation. The values depend to the filter size and length and to the filter media.
Reference oil viscosity 30 mm^2/s

LOW & MEDIUM PRESSURE FILTERS

Filter element		Absolute filtration N - W Series					Nominal filtration N Series		
Type	Length	A03	A06	A10	A16	A25	P10	P25	M25
CU 110	1	16.25	15.16	8.75	8.14	5.87	2.86	2.65	0.14
	2	12.62	10.44	6.11	6.02	4.15	1.60	1.49	0.12
	3	8.57	7.95	5.07	4.07	2.40	1.24	1.15	0.11
	4	5.76	4.05	2.80	2.36	1.14	0.91	0.85	0.05
CU 210	1	5.30	4.80	2.00	1.66	1.32	0.56	0.43	0.12
	2	3.44	2.95	1.24	1.09	0.70	0.42	0.35	0.09
	3	2.40	1.70	0.94	0.84	0.54	0.33	0.23	0.05
DN	016	7.95	7.20	3.00	2.49	1.98	0.84	0.65	0.18
	025	5.00	4.53	1.89	1.57	1.25	0.53	0.41	0.11
	040	3.13	2.66	1.12	0.98	0.63	0.38	0.32	0.08
CU 400	2	3.14	2.55	1.46	1.22	0.78	0.75	0.64	0.19
	3	2.15	1.70	0.94	0.78	0.50	0.40	0.34	0.10
	4	1.60	1.28	0.71	0.61	0.40	0.34	0.27	0.08
	5	1.00	0.83	0.47	0.34	0.20	0.24	0.19	0.06
	6	0.82	0.58	0.30	0.27	0.17	0.22	0.18	0.105
CU 900	1	0.86	0.63	0.32	0.30	0.21	-	-	0.05
CU 950	2	1.03	0.80	0.59	0.40	0.26	-	-	0.05
	3	0.44	0.40	0.27	0.18	0.15	-	-	0.02
MR 630	7	0.88	0.78	0.36	0.34	0.16	0.12	0.96	0.47

HIGH PRESSURE FILTERS

Filter element		Absolute filtration N - R Series					Nominal filtration N Series
Type	Length	A03	A06	A10	A16	A25	M25
HP 010 HP 011	1	332.71	250.07	184.32	152.36	128.36	-
	2	220.28	165.56	74.08	59.13	37.05	-
	3	123.24	92.68	41.48	33.08	20.72	-
	4	77.76	58.52	28.37	22.67	16.17	-
HP 039	2	70.66	53.20	25.77	20.57	14.67	4.90
	3	36.57	32.28	18.00	13.38	8.00	2.90
	4	26.57	23.27	12.46	8.80	5.58	2.20
HP 050 HPX 050	1	31.75	30.30	13.16	12.3	7.29	1.60
	2	24.25	21.26	11.70	9.09	4.90	1.40
	3	17.37	16.25	8.90	7.18	3.63	1.25
	4	12.12	10.75	6.10	5.75	3.08	1.07
	5	7.00	6.56	3.60	3.10	2.25	0.80
HP 065	1	58.50	43.46	23.16	19.66	10.71	1.28
	2	42.60	25.64	16.22	13.88	7.32	1.11
	3	20.50	15.88	8.18	6.81	3.91	0.58
HP 135	1	20.33	18.80	9.71	8.66	4.78	2.78
	2	11.14	10.16	6.60	6.38	2.22	1.11
	3	6.48	6.33	3.38	3.16	2.14	1.01
HP 150	1	17.53	15.91	7.48	6.96	5.94	1.07
	2	8.60	8.37	3.54	3.38	3.15	0.58
	3	6.53	5.90	2.93	2.79	2.12	0.49

TO BE CONTINUED >>

Corrective factor Y to be used for the filter element pressure drop calculation. The values depend to the filter size and length and to the filter media.
Reference oil viscosity 30 mm^2/s

HIGH PRESSURE FILTERS

Filter element		Absolute filtration N - R Series					Nominal filtration N Series
Type	Length	A03	A06	A10	A16	A25	M25
HP 320	1	10.88	9.73	5.02	3.73	2.54	1.04
	2	4.40	3.83	1.75	1.48	0.88	0.71
	3	2.75	2.11	1.05	0.87	0.77	0.61
	4	2.12	1.77	0.98	0.78	0.55	0.47
HP 500	1	4.44	3.67	2.30	2.10	1.65	0.15
	2	3.37	2.77	1.78	1.68	1.24	0.10
	3	2.22	1.98	1.11	1.09	0.75	0.08
	4	1.81	1.33	0.93	0.86	0.68	0.05
	5	1.33	1.15	0.77	0.68	0.48	0.04
HP 325	1	3.65	2.95	2.80	1.80	0.90	0.38
	2	2.03	1.73	1.61	1.35	0.85	0.36
	3	1.84	1.42	1.32	1.22	0.80	0.35

Filter element		Absolute filtration S - H - U Series				
Type	Length	A03	A06	A10	A16	A25
HP 010 HP 011	1	424.58	319.74	235.17	194.44	163.78
	2	281.06	211.25	94.35	75.45	47.26
	3	130.14	97.50	43.63	34.82	21.81
	4	109.39	82.25	36.79	29.37	18.40
HP 039	2	73.00	57.00	28.00	24.00	17.20
	3	40.90	36.33	21.88	18.80	11.20
	4	31.50	28.22	17.22	9.30	6.70
HP 050 HPX 050	1	47.33	34.25	21.50	20.50	14.71
	2	29.10	25.95	10.04	10.90	5.88
	3	20.85	19.50	10.68	8.61	4.36
	4	14.55	12.90	7.32	6.90	3.69
	5	9.86	9.34	6.40	4.80	2.50
HP 135	1	29.16	25.33	13.00	12.47	5.92
	2	14.28	11.04	7.86	7.90	4.44
	3	8.96	7.46	4.89	4.16	3.07
HP 320	1	13.00	12.19	6.80	6.40	3.32
	2	6.45	5.31	3.01	2.89	1.73
	3	4.13	3.14	1.90	1.78	1.17
	4	3.17	2.71	1.80	1.70	1.10
HP 500	1	9.70	8.81	4.55	4.47	2.80
	2	5.46	4.63	2.88	2.68	2.20
	3	3.90	3.74	2.22	2.07	1.53
	4	3.10	2.84	1.56	1.53	1.02
	5	1.93	1.83	1.14	1.08	0.69

Corrective factor Y to be used for the filter element pressure drop calculation. The values depend to the filter size and length and to the filter media.
Reference oil viscosity 30 mm^2/s

STAINLESS STEEL HIGH PRESSURE FILTERS

Filter element		Absolute filtration N - R Series					Nominal filtration N Series
Type	Length	A03	A06	A10	A16	A25	M25
HP 010 HP 011	1	332.71	250.07	184.32	152.36	128.36	-
	2	220.28	165.56	74.08	59.13	37.05	-
	3	123.24	92.68	41.48	33.08	20.72	-
	4	77.76	58.52	28.37	22.67	16.17	-
HP 039	2	70.66	53.20	25.77	20.57	14.67	4.90
	3	36.57	32.28	18.00	13.38	8.00	2.90
	4	26.57	23.27	12.46	8.80	5.58	2.20
HP 050	1	31.75	30.30	13.16	12.3	7.29	1.60
	2	24.25	21.26	11.70	9.09	4.90	1.40
	3	17.37	16.25	8.90	7.18	3.63	1.25
	4	12.12	10.75	6.10	5.75	3.08	1.07
	5	7.00	6.56	3.60	3.10	2.25	0.80
HP 135	1	20.33	18.80	9.71	8.66	4.78	2.78
	2	11.14	10.16	6.60	6.38	2.22	1.11
	3	6.48	6.33	3.38	3.16	2.14	1.01

Filter element		Absolute filtration S - H - U Series				
Type	Length	A03	A06	A10	A16	A25
HP 010 HP 011	1	424.58	319.74	235.17	194.44	163.78
	2	281.06	211.25	94.35	75.45	47.26
	3	130.14	97.50	43.63	34.82	21.81
	4	109.39	82.25	36.79	29.37	18.40
HP 039	2	73.00	57.00	28.00	24.00	17.20
	3	40.90	36.33	21.88	18.80	11.20
	4	31.50	28.22	17.22	9.30	6.70
HP 050	1	47.33	34.25	21.50	20.50	14.71
	2	29.10	25.95	10.04	10.90	5.88
	3	20.85	19.50	10.68	8.61	4.36
	4	14.55	12.90	7.32	6.90	3.69
	5	9.86	9.34	6.40	4.80	2.50
HP 135	1	29.16	25.33	13.00	12.47	5.92
	2	14.28	11.04	7.86	7.90	4.44
	3	8.96	7.46	4.89	4.16	3.07

Corrective factor Y to be used for the filter element pressure drop calculation. The values depend to the filter size and length and to the filter media.
Reference oil viscosity 30 mm^2/s

FILTERS FOR POTENTIALLY EXPLOSIVE ATMOSPHERE

Filter element		Absolute filtration N - R Series					Nominal filtration N Series
Type	Length	A03	A06	A10	A16	A25	M25
HP 010 HP 011	1	332.71	250.07	184.32	152.36	128.36	-
	2	220.28	165.56	74.08	59.13	37.05	-
	3	123.24	92.68	41.48	33.08	20.72	-
	4	77.76	58.52	28.37	22.67	16.17	-
HP 039	2	70.66	53.20	25.77	20.57	14.67	4.90
	3	36.57	32.28	18.00	13.38	8.00	2.90
	4	26.57	23.27	12.46	8.80	5.58	2.20
HPX 050	1	31.75	30.30	13.16	12.3	7.29	1.60
	2	24.25	21.26	11.70	9.09	4.90	1.40
	3	17.37	16.25	8.90	7.18	3.63	1.25
	4	12.12	10.75	6.10	5.75	3.08	1.07
	5	7.00	6.56	3.60	3.10	2.25	0.80
HP 135	1	20.33	18.80	9.71	8.66	4.78	2.78
	2	11.14	10.16	6.60	6.38	2.22	1.11
	3	6.48	6.33	3.38	3.16	2.14	1.01

Filter element		Absolute filtration S - H - U Series				
Type	Length	A03	A06	A10	A16	A25
HP 010 HP 011	1	424.58	319.74	235.17	194.44	163.78
	2	281.06	211.25	94.35	75.45	47.26
	3	130.14	97.50	43.63	34.82	21.81
	4	109.39	82.25	36.79	29.37	18.40
HP 039	2	73.00	57.00	28.00	24.00	17.20
	3	40.90	36.33	21.88	18.80	11.20
	4	31.50	28.22	17.22	9.30	6.70
HPX 050	1	47.33	34.25	21.50	20.50	14.71
	2	29.10	25.95	10.04	10.90	5.88
	3	20.85	19.50	10.68	8.61	4.36
	4	14.55	12.90	7.32	6.90	3.69
	5	9.86	9.34	6.40	4.80	2.50
HP 135	1	29.16	25.33	13.00	12.47	5.92
	2	14.28	11.04	7.86	7.90	4.44
	3	8.96	7.46	4.89	4.16	3.07

Corrective factor Y to be used for the filter element pressure drop calculation. The values depend to the filter size and length and to the filter media.

Filters sizing software

The web-based software program will allow you to select the most suitable MP Filtri's Filters, in accordance with your process design requirements.

The program will automatically check your input design process prior to propose you the acceptable solutions and create an output in PDF report style format.

The MP Filtri Selection Tool software program is easy to use with a flexible fast design method and provides improved layout formats with full descriptions.

The web-based tool is available at MP Filtri website at following link: https://www.mpfiltri.com/tools/

The related, complete user guide is available as Manual and downloadable from the "Download" section of MP Filtri website, as well as scanning the following QR code

Return filters are used as process and safety filters to protect pumps and hydraulic circuits from contamination as per ISO 4406.

They are available in 8 styles:

- **MPFX-MPF tank top semi-immersed filter with external / internal oil flow; standard filter element disassembly**
- **MPLX tank top semi-immersed filter completely interchangeable with Pall 8420 & 8520, with external / internal oil flow; easy filter element disassembly**
- **MPTX-MPT tank top semi-immersed filter with external / internal oil flow; easy filter element disassembly without any specific tool**
- **MFBX-MFB element and bowl assembly with optional cover and hold-down spring for dirtbox or molded tank applications**
- **MPH tank top semi-immersed filter with internal / external oil flow, therefore keeping the dirt inside the bowl and not on the filter element; standard filter element disassembly, magnetic filter as option**
- **MPI semi-immersed filter element specifically designed to be mounted directly on the oil tank; magnetic filter as option**
- **FRI, the oldest tank top semi-immersed return filter manufactured by MP FILTRI, with external / internal oil flow; available in the single or duplex versions with outlet connection, it can be used also as in-line filter**
- **RF2 semi-immersed filter with shut-off valve for side tank mounting, with external / internal oil flow; easy filter element disassembly without any specific tool.**

FILTER SIZING

For the proper corrective factor Y see chapter at page 23 - 24

Return filters

RFEX ELIXIR®	page 72
MPFX	82
MPLX	110
MPTX	118
MFBX	136
MPF	145
MPT	173
MFB	191
MDH	page 199
MPH	207
MPI	231
FRI	243
RF2	259
ACCESSORIES	266
INDICATORS	710

MYCLEAN

THE X CONCEPT FOR OUR FILTERS

**Protect the performance of your system with MYclean.
Quality and efficiency are fundamental for MP Filtri:
this exclusive new filter element possesses polygon shape geometry and specific seal that ensures only original spare parts can be used - ensuring correct operation and higher system reliability.**

RFEX series

with MYCLEAN FEX Filter Element

- **Protects the machine from improper use of non-original products.**
- **Safety of constant quality protection & reliability**

With exclusive filter element you are sure that only MP Filtri filter elements can be used, ensuring the best cleaning level of the oil due to the use of originals filter elements.

The products identified as RFEX are protected by:

- Italian Patent n° 102014902261205
- Canadian Patent n° 2,937,258
- European Patent n° 3 124 092 B1
- US Patent n° 20170030384 A1

RFEX series

Maximum working pressure up to 1.6 MPa (16 bar) - Flow rate up to 260 l/min

RFEX GENERAL INFORMATION

Description

Return filter

Maximum working pressure up to 1.6 MPa (16 bar)
Flow rate up to 260 l/min

RFEX is a range of return filters for protection of the reservoir against the system contamination.
They are mounted in line to limit aeration or foam generation into the reservoir.

Available features:
- Female threaded connections up to 1 1/4" and flanged connections up to 1 5/8", for a maximum flow rate of 260 l/min
- Fine filtration rating, to get a good cleanliness level into the reservoir
- Bypass valve, to relieve excessive pressure drop across the filter media
- Visual, electrical, axial and radial pressure gauges
- MYclean interface connection for the filter element, to protect the product against non-original spare parts
- External protective wrap, to optimize the flow through the element and to save the element efficiency against non-proper handling

Common applications:
- Light Industrial equipment
- Mobile application

Technical data

Filter housing materials
- Head: Aluminium
- Bypass valve: Polyamide - Steel
- Bowl: Polyamide

Bypass valve
Opening pressure 175 kPa (1.75 bar) ±10%

Δp element type
- Microfibre filter elements - series N: 8 bar
- Fluid flow through the filter element from OUT to IN

Seals
Standard NBR series A

Temperature
From -25 °C to +110 °C

Note
RFEX filters are provided for vertical mounting

Weights [kg] and volumes [dm³]

Filter series	Weights [kg]	Volumes [dm³]
RFEX 060	1.00	0.60
RFEX 080	1.15	0.80
RFEX 110	1.90	1.60
RFEX 160	2.10	2.00

Hydraulic symbols

Filter series	Style S	Style B
RFEX 060	•	•
RFEX 080	•	•
RFEX 110	•	•
RFEX 160	•	•

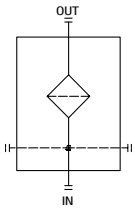

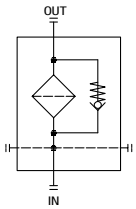

FILTER ASSEMBLY SIZING
Flow rates [l/min]

Filter element design - N Series

Filter series	A10	A16	A25	M60	M90	P10	P25
RFEX 060	52	53	55	71	72	54	59
RFEX 080	59	59	62	73	74	65	68

Connections of filter under test G 3/4”

Filter series	A10	A16	A25	M60	M90	P10	P25
RFEX 060	60	61	64	87	89	62	77
RFEX 080	69	70	75	91	92	79	93

Connections of filter under test G 1”

Filter series	A10	A16	A25	M60	M90	P10	P25
RFEX 110	141	153	172	250	252	186	196
RFEX 160	166	168	191	255	256	207	215

Connections of filter under test G 1 1/4”

Maximum flow rate for a complete return filter with a pressure drop Δp = 0.5 bar.
The reference fluid has a kinematic viscosity of 30 mm^2/s (cSt) and a density of 0.86 kg/dm^3.
For different pressure drop or fluid viscosity we recommend to use our selection software available on www.mpfiltri.com.
Please, contact our Sales Department for further additional information.

Pressure drop

Filter housings
Δp pressure drop

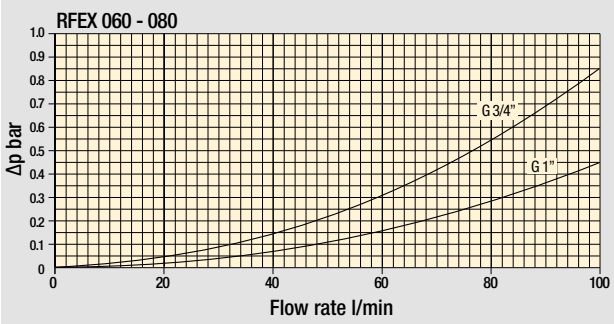

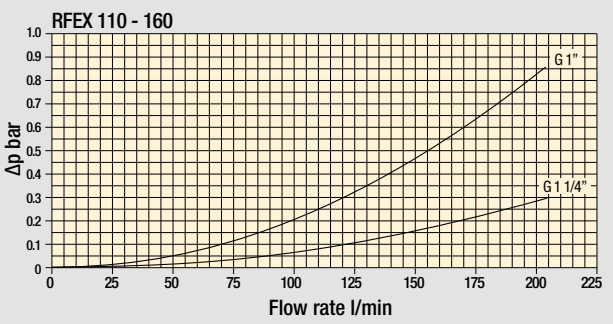

Bypass valve
pressure drop

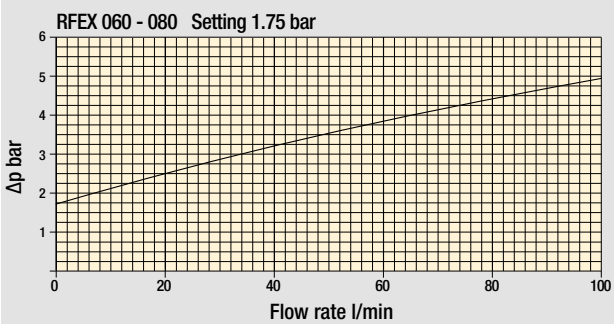

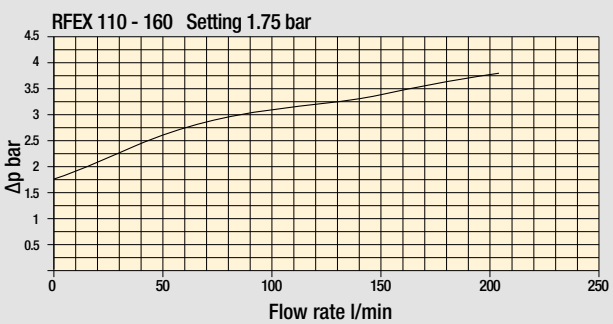

The curves are plotted using mineral oil with density of 0.86 kg/dm^3 in compliance with ISO 3968.
Δp varies proportionally with density.

Designation & Ordering code

COMPLETE FILTER

Configuration example : RFEX060 | B | A | A | 6 | A10 | N | P01

Series and size

RFEX060 Filter featuring MY CLEAN Filter Element
RFEX080 Filter featuring MY CLEAN Filter Element

Bypass valve

S Without bypass
B 1.75 bar

Seals and treatments

A NBR

Connections

A G 3/4”
B G 1”
C 3/4” NPT
D 1” NPT
E SAE 12 - 1 1/16” - 12 UN
F SAE 16 - 1 5/16” - 12 UN

Connection for clogging indicator

6 With plugged connections

Filtration rating

A10	Inorganic microfiber	10 µm	**P10**	Resin impregnated paper	10 µm
A16	Inorganic microfiber	16 µm	**P25**	Resin impregnated paper	25 µm
A25	Inorganic microfiber	25 µm			
M60	Wire mesh	60 µm			
M90	Wire mesh	90 µm			

Element Δp

N 8 bar

Execution

P01 MP Filtri standard
Pxx Customized

FILTER ELEMENT

Configuration example: FEX060 | A10 | A | N | P01

Element series and size

FEX060 Filter Element with MY CLEAN feature
FEX080 Filter Element with MY CLEAN feature

Filtration rating

A10	Inorganic microfiber	10 µm	**P10**	Resin impregnated paper	10 µm
A16	Inorganic microfiber	16 µm	**P25**	Resin impregnated paper	25 µm
A25	Inorganic microfiber	25 µm			
M60	Wire mesh	60 µm			
M90	Wire mesh	90 µm			

Seals and treatments

A NBR

Element Δp

N 8 bar

Execution

P01 MP Filtri standard
Pxx Customized

CLOGGING INDICATORS

See page 710-711

BEA Electrical pressure indicator
BEM Electrical pressure indicator
BLA Electrical / visual pressure indicator
BVA Axial pressure gauge
BVR Radial pressure gauge
BVP Visual pressure indicator with automatic reset
BVQ Visual pressure indicator with manual reset

Dimensions

Filter size	H [mm]
060	202
080	265

Connections	T	R
A	G 1/8”	M6
B	G 1/8”	M6
C	1/8” NPT	1/4” UNC
D	1/8” NPT	1/4” UNC
E	1/8” NPT	1/4” UNC
F	1/8” NPT	1/4” UNC

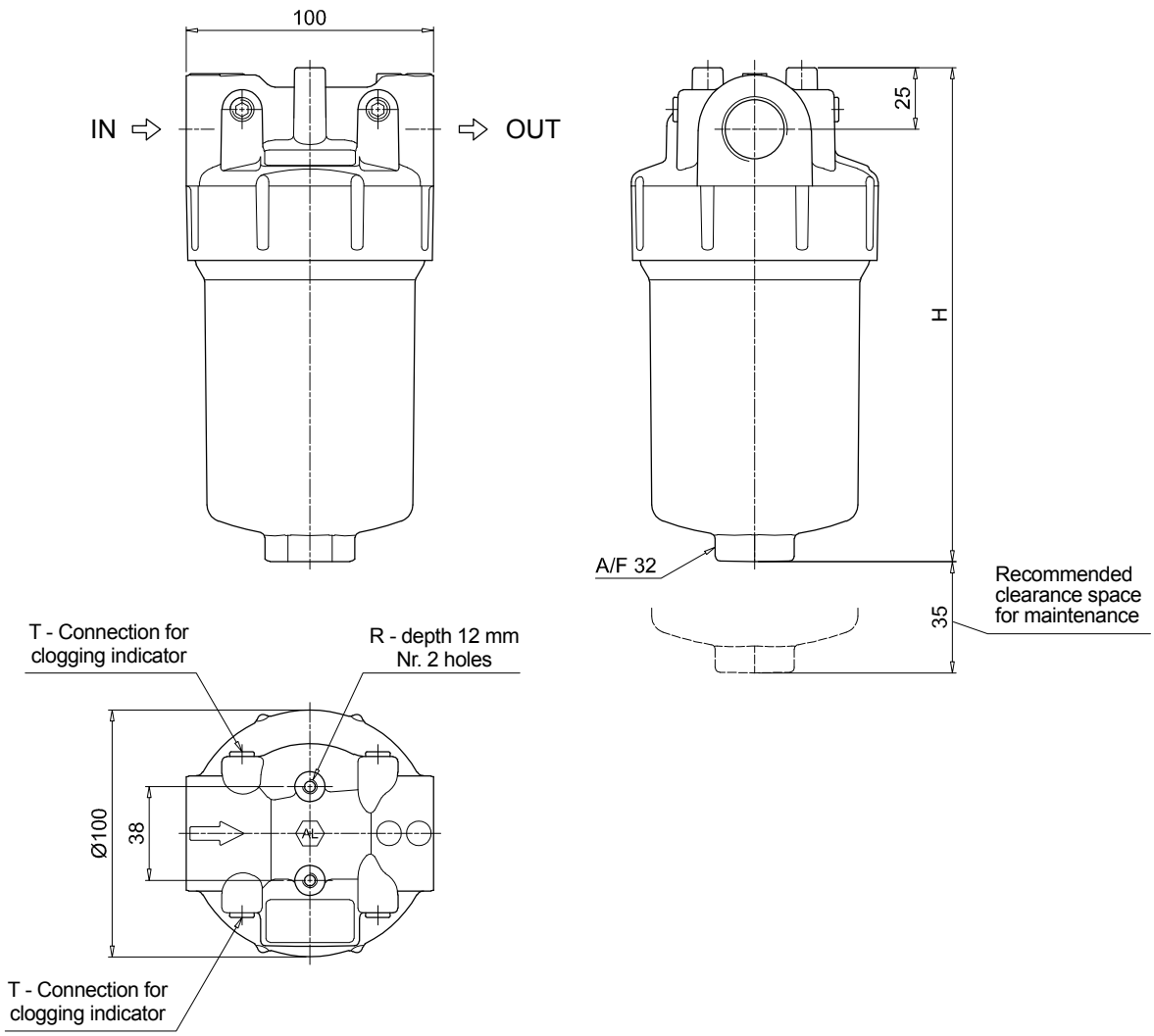

Designation & Ordering code

COMPLETE FILTER

Configuration example : RFEX110 | B | A | A | 6 | A10 | N | P01

Series and size

RFEX110 Filter featuring MY CLEAN Filter Element
RFEX160 Filter featuring MY CLEAN Filter Element

Bypass valve

S Without bypass
B 1.75 bar

Seals and treatments

A NBR

Connections

A G 1”
B G 1 1/4”
C 1” NPT
D 1 1/4” NPT
E SAE 16 - 1 5/16” - 12 UN
F SAE 20 - 1 5/8” - 12 UN

Connection for clogging indicator

6 With plugged connections

Filtration rating

A10	Inorganic microfiber	10 µm	**P10**	Resin impregnated paper	10 µm
A16	Inorganic microfiber	16 µm	**P25**	Resin impregnated paper	25 µm
A25	Inorganic microfiber	25 µm			
M60	Wire mesh	60 µm			
M90	Wire mesh	90 µm			

Element Δp

N 8 bar

Execution

P01 MP Filtri standard
Pxx Customized

FILTER ELEMENT

Configuration example: FEX110 | A10 | A | N | P01

Element series and size

FEX110 Filter Element with MY CLEAN feature
FEX160 Filter Element with MY CLEAN feature

Filtration rating

A10	Inorganic microfiber	10 µm	**P10**	Resin impregnated paper	10 µm
A16	Inorganic microfiber	16 µm	**P25**	Resin impregnated paper	25 µm
A25	Inorganic microfiber	25 µm			
M60	Wire mesh	60 µm			
M90	Wire mesh	90 µm			

Seals and treatments

A NBR

Element Δp

N 8 bar

Execution

P01 MP Filtri standard
Pxx Customized

CLOGGING INDICATORS

See page 710-711

BEA Electrical pressure indicator
BEM Electrical pressure indicator
BLA Electrical / visual pressure indicator
BVA Axial pressure gauge
BVR Radial pressure gauge
BVP Visual pressure indicator with automatic reset
BVQ Visual pressure indicator with manual reset

Dimensions

Filter size	H [mm]
110	266
160	315

Connections	T	R
A	G 1/8"	M8
B	G 1/8"	M8
C	1/8" NPT	5/16" UNC
D	1/8" NPT	5/16" UNC
E	1/8" NPT	5/16" UNC
F	1/8" NPT	5/16" UNC

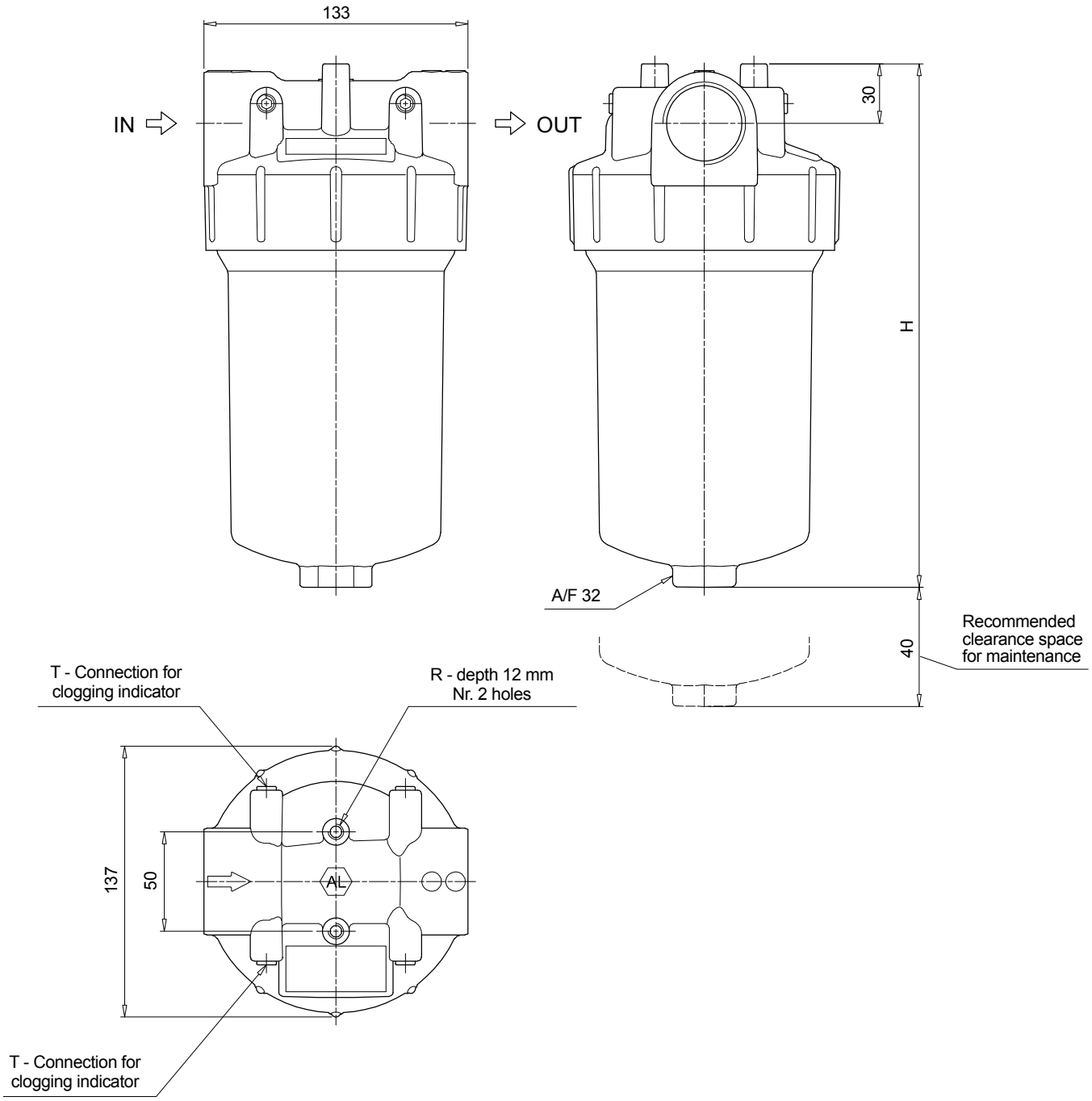

Order number for spare parts

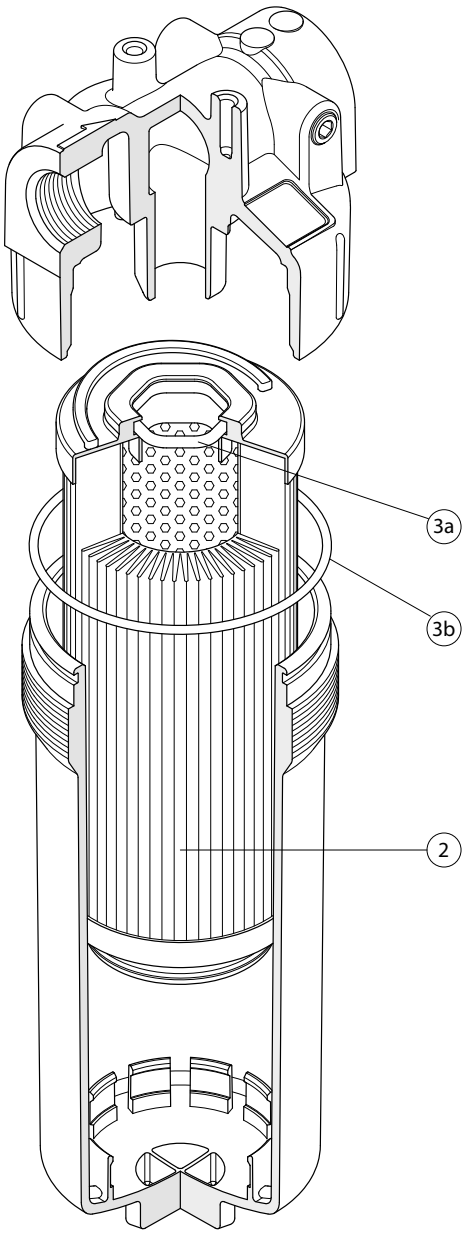

Item:	Q.ty: 1 pc. 2	Q.ty: 1 pc. 3 (3a ÷ 3b)
Filter series	**Filter element**	**Seal Kit code number NBR**
RFEX 060-080	See order table	02050771
RFEX 110-160		02050772

THE X CONCEPT FOR OUR FILTERS

Protect the performance of your system with MYclean.
Quality and efficiency are fundamental for MP Filtri:
this exclusive new filter element possesses polygon shape geometry and specific seal that ensures only original spare parts can be used - ensuring correct operation and higher system reliability.

MPFX series

with MYCLEAN MFX Filter Element

- **Protects the machine from improper use of non-original products.**
- **Safety of constant quality protection & reliability**

With exclusive filter element you are sure that only MP Filtri filter elements can be used, ensuring the best cleaning level of the oil due to the use of originals filter elements.

The products identified as MPFX are protected by:

- Italian Patent n° 102014902261205
- Canadian Patent n° 2,937,258
- European Patent n° 3 124 092 B1
- US Patent n° 20170030384 A1

TOGETHER WITH MYCLEAN, AS OPTION, MPFX SERIES CAN BE PROVIDED WITH

zerospark®

THE ANTI-STATIC FILTERS

THE Z CONCEPT FOR OUR FILTERS

Zerospark® is a specialist solution designed to solve the problem of electrostatic discharge inside hydraulic filters. Caused by the electrical charge build-up due to the passage of oil through the filters, this can result in damage to filter elements, oils and circuit components. It can even cause fire hazards in environments where flammable materials are present.

MPFX series

Maximum working pressure up to 800 kPa (8 bar) - Flow rate up to 900 l/min

MPFX GENERAL INFORMATION

Description

Return filter

Maximum working pressure up to 800 kPa (8 bar)
Flow rate up to 900 l/min

MPFX is a range of return filters for protection of the reservoir against the system contamination.
They are directly fixed to the reservoir, in immersed or semi-immersed position.
The filter output must be always immersed into the fluid to avoid aeration or foam generation into the reservoir.

Available features:

- Female threaded connections up to 2" and flanged connections up to 2", for a maximum flow rate of 900 l/min
- Multiple connections, to connect several return lines or drains
- Fine filtration rating, to get a good cleanliness level into the reservoir
- Bypass valve integrated into the filter element, to relieve excessive pressure drop across the filter media
- 2, 3 or 4 fixing holes for installation, to suit a variety of reservoir surfaces
- O-ring or Flat Seal to suit a variety of reservoir surfaces
- Oil dipstick, to easily check the level of the fluid into the reservoir (sold as separate item)
- Extension tube, to be used in deep reservoirs (sold as separate item)
- Diffuser, to reduce the risk of aeration, foaming and noise (sold as separate item)
- Filler plug, to fill cleaned fluid into the tank without an additional connection
- Visual, electrical and electronic clogging indicators
- MYclean interface connection, to protect the product against non-original spare parts
- External protective wrap, to optimize the flow through the element and to save the element efficiency against non-proper handling

Common applications:

- Light Industrial equipment
- Mobile application

Technical data

Filter housing materials

- Head: Aluminium

- Cover
  Polyamide: MPFX 030-100-104-110
  Aluminium: MPFX 181-182-184-191-192-194-400-410-450-451-750

- Bowl: Polyamide

Bypass valve

- Opening pressure 175 kPa (1.75 bar) ±10%
- Opening pressure 300 kPa (3 bar) ±10%

Δp element type

- Microfiber filter elements - series H: 10 bar
- Fluid flow through the filter element from OUT to IN

Seals

- Standard NBR series A
- Optional FPM series V

Temperature

From -25 °C to +110 °C

Note

MPFX filters are provided for vertical mounting

Weights [kg] and volumes [dm³]

Filter series	Weights [kg]					Volumes [dm³]				
	Length	1	2	3	4	Length	1	2	3	4
MPFX 030		0.40	-	-	-		0.29	-	-	-
MPFX 100		0.61	0.64	0.67	0.74		0.64	0.85	1.20	1.65
MPFX 104		0.82	0.96	1.02	1.25		0.64	0.85	1.20	1.65
MPFX 110		0.64	0.68	0.71	0.78		-	-	-	-
MPFX 181		2.20	3.00	-	-		2.50	4.00	-	-
MPFX 182		2.30	3.10	-	-		2.50	4.00	-	-
MPFX 184		2.55	3.45	-	-		2.65	4.45	-	-
MPFX 191		-	3.00	-	-		-	4.25	-	-
MPFX 192		-	3.10	-	-		-	4.25	-	-
MPFX 194		-	3.45	-	-		-	4.45	-	-
MPFX 400		3.35	3.65	3.90	-		3.70	4.60	5.40	-
MPFX 410		3.55	3.85	4.10	-		3.70	4.60	5.40	-
MPFX 450-451		3.95	4.25	4.50	-		3.70	4.60	5.40	-
MPFX 750		6.30	-	-	-		8.45	-	-	-

FILTER ASSEMBLY SIZING
Flow rates [l/min]

		Filter element design - H series					Filter element design - N series		
Filter series	Length	A03	A06	A10	A16	A25	M25 M60 M90	P10	P25
MPFX 030	**1**	7	10	24	29	47	84	60	66
MPFX 100-104-110	**1**	18	20	53	56	65	153	87	96
	2	28	38	65	75	95	158	111	123
	3	48	55	125	135	169	289	224	251
	4	79	89	180	185	198	306	264	289
MPFX 181-182-184	**1**	127	148	235	243	278	441	285	299
	2	231	262	358	382	388	472	404	412
MPFX 191-192-194	**2**	261	305	489	528	546	696	583	598
MPFX 400	**1**	150	171	294	304	350	585	370	390
	2	237	252	454	462	589	868	619	645
	3	248	288	553	609	621	885	680	703
MPFX 410	**1**	146	167	277	285	325	512	341	357
	2	226	239	396	402	485	644	503	519
	3	236	269	462	497	505	653	539	553
MPFX 450-451	**1**	150	171	294	304	350	585	370	390
	2	237	252	454	462	589	868	619	645
	3	248	288	553	609	621	885	680	703
MPFX 750	**1**	392	465	623	700	769	929	804	819

Maximum flow rate for a complete return filter with a pressure drop Δp = 0.5 bar.
The reference fluid has a kinematic viscosity of 30 mm^2/s (cSt) and a density of 0.86 kg/dm^3.
For different pressure drop or fluid viscosity we recommend to use our selection software available on www.mpfiltri.com.
You can also calculate the right size using the formulas present on the FILTER SIZING paragraph at the beginning of the full catalogue or at the beginning of the filter family brochure.
Please, contact our Sales Department for further additional information.

Hydraulic symbols

Filter series	Style 1 connection	Style 2 connections
MPFX 030	•	-
MPFX 100	•	-
MPFX 104	•	-
MPFX 110	-	•
MPFX 181	•	-
MPFX 182	-	•
MPFX 184	•	•
MPFX 191	•	-
MPFX 192	•	-
MPFX 194	•	•
MPFX 400	•	-
MPFX 410	-	•
MPFX 450	•	-
MPFX 451	-	•
MPFX 750	•	-

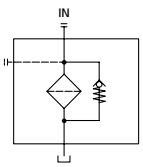

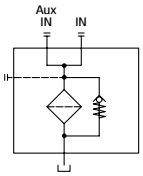

Pressure drop

Filter housings Δp pressure drop

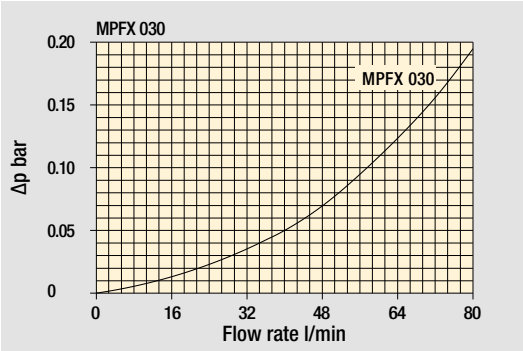

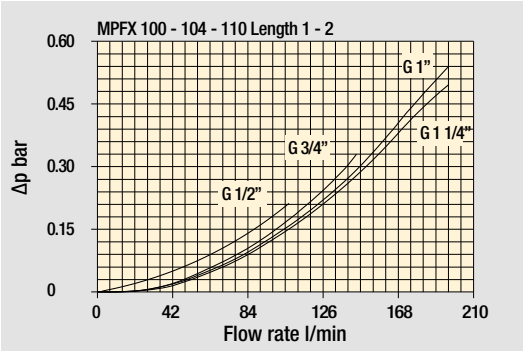

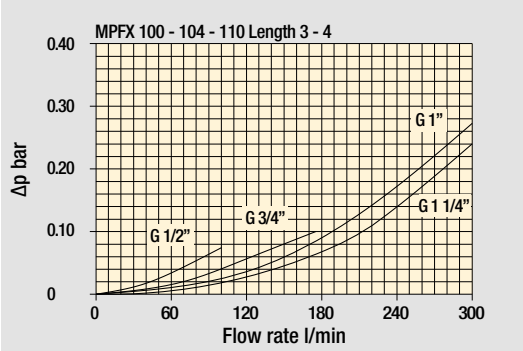

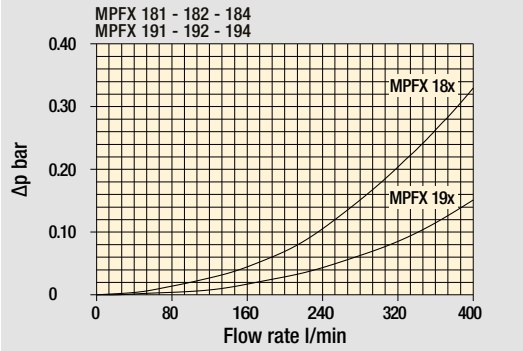

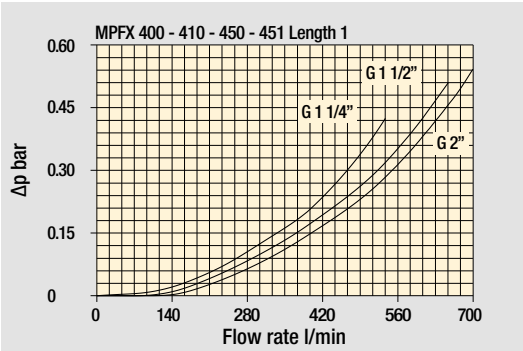

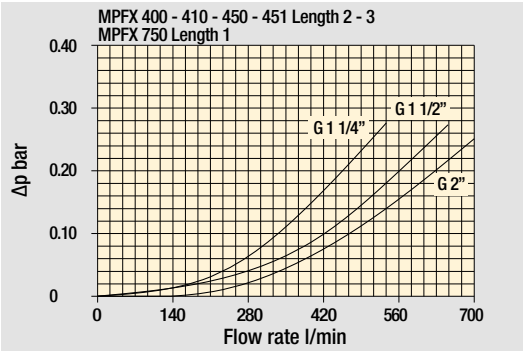

Bypass valve pressure drop

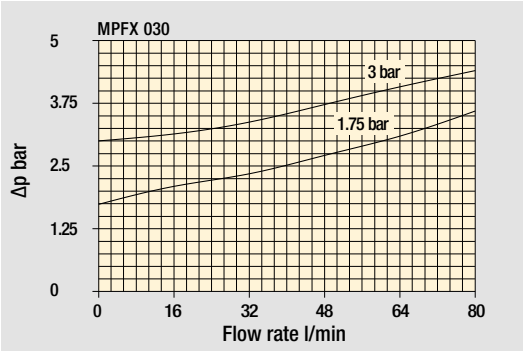

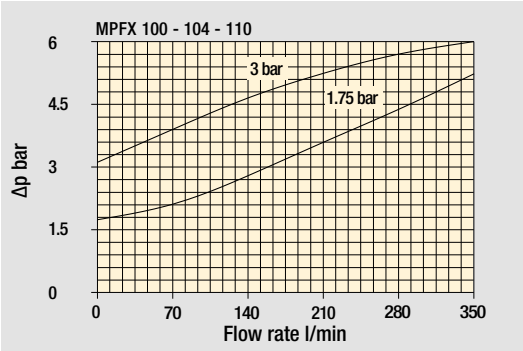

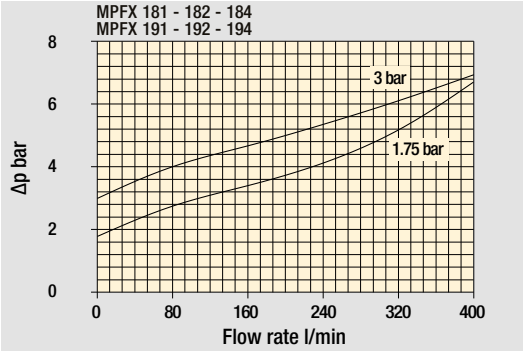

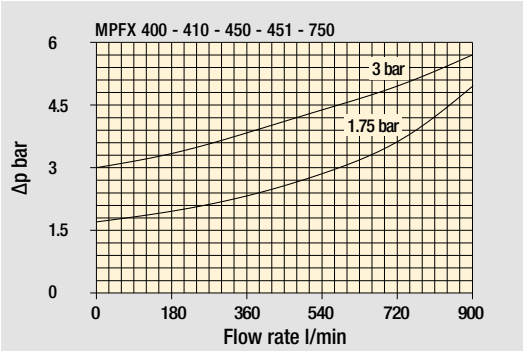

The curves are plotted using mineral oil with density of 0.86 kg/dm^3 in compliance with ISO 3968. Δp varies proportionally with density.

Standard - Single IN port

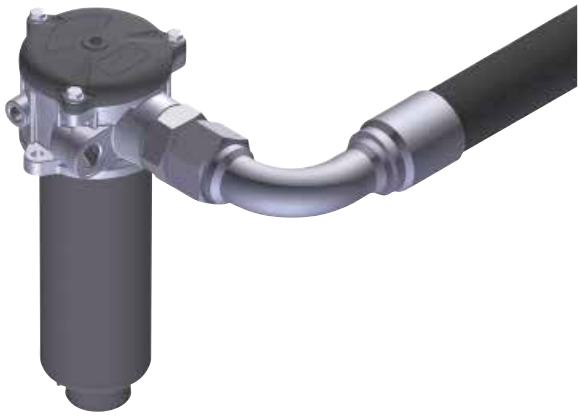

Double IN port
Option: double indicator port

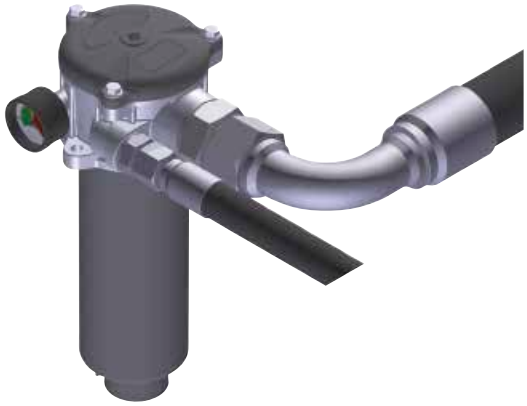

Double IN port - Drain port
Option: indicator port

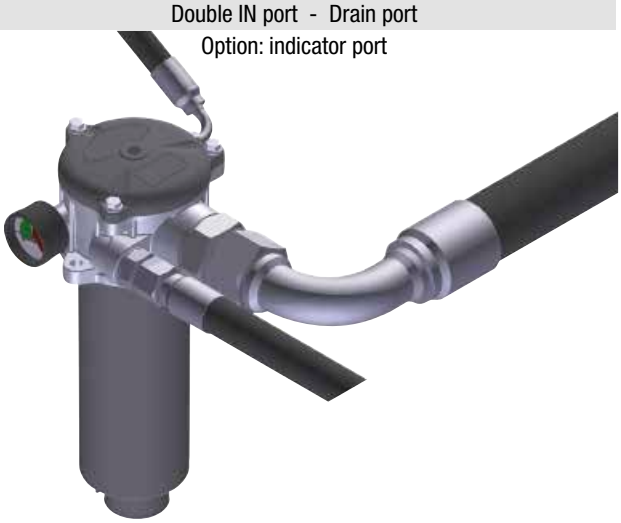

Double IN port - Double drain port

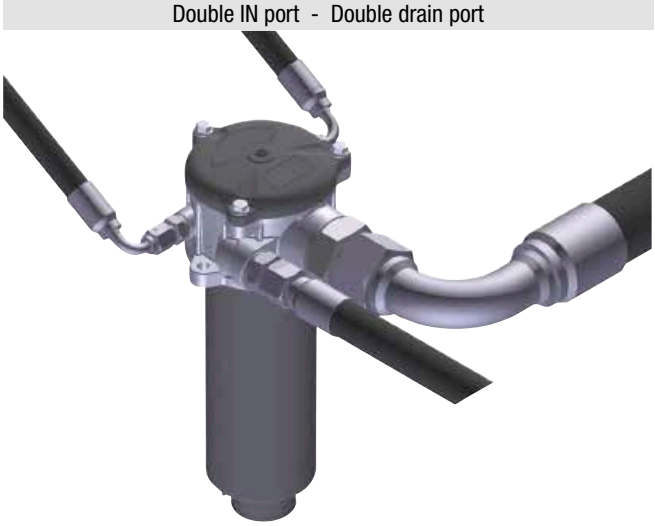

MPFX MPFX030

Designation & Ordering code

COMPLETE FILTER

Configuration example 1:	MPFX030	1	V	G1	M25	N	B	P01
Configuration example 2:	MPFX030	1	A	G4	A10	H	E	P01

Series and size

MPFX030 Filter featuring MYCLEAN Filter Element

Length

1

Seals and treatments

A	NBR
V	FPM
W	NBR head anodized
Z	FPM head anodized

Connections

G1	G 1/2”
G4	1/2” NPT
G7	SAE 8 - 3/4” - 16 UNF

Filtration rating (filter media)

A03	Inorganic microfiber 3 µm	**M25**	Wire mesh 25 µm
A06	Inorganic microfiber 6 µm	**M60**	Wire mesh 60 µm
A10	Inorganic microfiber 10 µm	**M90**	Wire mesh 90 µm
A16	Inorganic microfiber 16 µm	**P10**	Resin impregnated paper 10 µm
A25	Inorganic microfiber 25 µm	**P25**	Resin impregnated paper 25 µm

Element Δp		Filter media Axx	Mxx	Pxx
N	10 bar	-	•	•
H	10 bar	•	-	-

Bypass valve

E	3 bar
B	1.75 bar

Executions

Base	zerospark	
P01	**Z01**	MP Filtri standard
Pxx	**Zxx**	Customized

FILTER ELEMENT

Configuration example 1:	MFX030	1	M25	N	V		P01
Configuration example 2:	MFX030	1	A10	H	B	E	P01

Element series and size

MFX030 Filter Element with MYCLEAN feature

Element length

1

Filtration rating (filter media)

A03	Inorganic microfiber 3 µm	**M25**	Wire mesh 25 µm
A06	Inorganic microfiber 6 µm	**M60**	Wire mesh 60 µm
A10	Inorganic microfiber 10 µm	**M90**	Wire mesh 90 µm
A16	Inorganic microfiber 16 µm	**P10**	Resin impregnated paper 10 µm
A25	Inorganic microfiber 25 µm	**P25**	Resin impregnated paper 25 µm

Element Δp		Filter media Axx	Mxx	Pxx
N	10 bar	-	•	•
H	10 bar	•	-	-

Seals

B	NBR
V	FPM

Bypass valve

E	3 bar
-	1.75 bar

Executions

Base	zerospark	
P01	**Z01**	MP Filtri standard
Pxx	**Zxx**	Customized

CLOGGING INDICATORS

See page 710-711

BVA	Axial pressure gauge	**BEA**	Electrical pressure indicator
BVR	Radial pressure gauge	**BEM**	Electrical pressure indicator
BVP	Visual pressure indicator with automatic reset	**BLA**	Electrical / visual pressure indicator
BVQ	Visual pressure indicator with manual reset		

ADDITIONAL FEATURES

See page 266

TE	Extension tube
T5	Filler plug M30x1.5

MPFX030

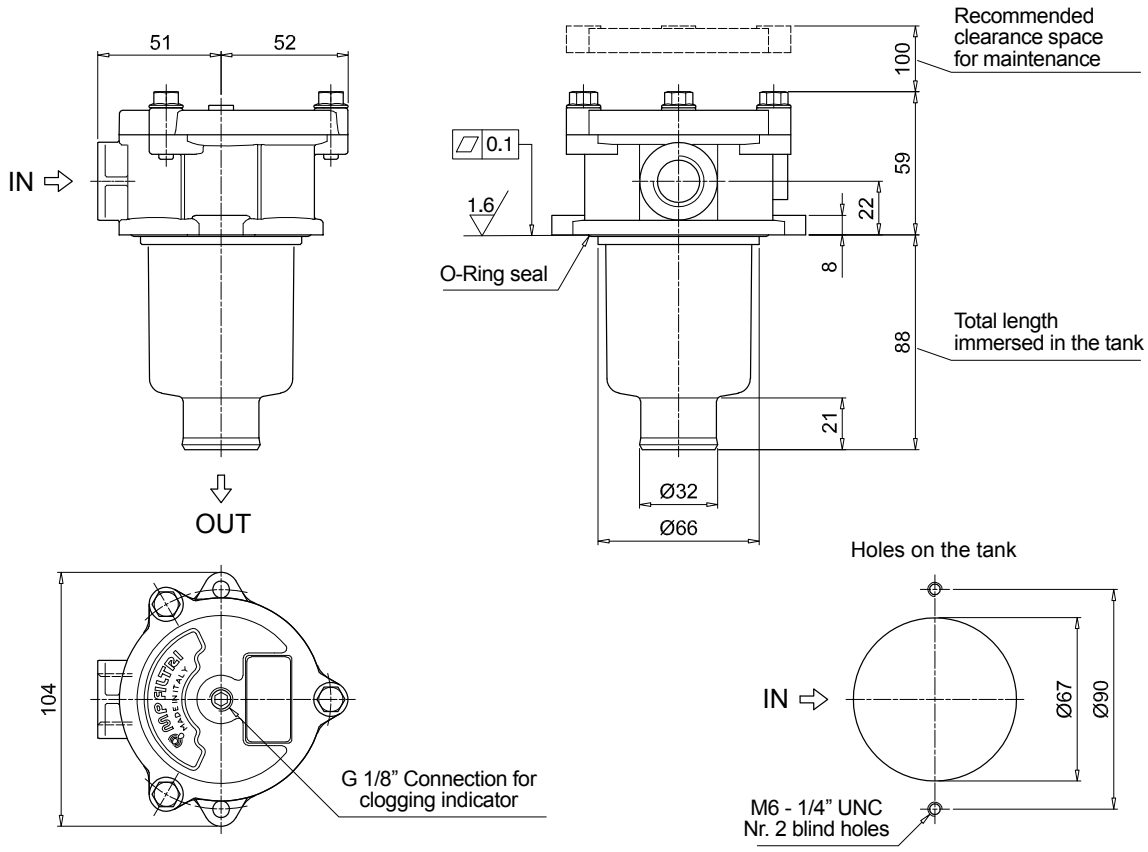
51
52
IN
OUT
0.1
1.6
O-Ring seal
Recommended clearance space for maintenance
100
59
22
8
88
21
Total length immersed in the tank
Ø32
Ø66
104
G 1/8" Connection for clogging indicator
Holes on the tank
IN
Ø67
Ø90
M6 - 1/4" UNC
Nr. 2 blind holes

MPFX MPFX100 - MPFX104

Designation & Ordering code

COMPLETE FILTER

Configuration example 1:	MPFX100	2	W	G3	A06	H	B	P01
Configuration example 2:	MPFX104	4	A	G8	P10	N	E	P01

Series and size

MPFX100 | **MPFX104** Filter featuring MYCLEAN Filter Element

Length

1 | **2** | **3** | **4**

Seals and treatments

A	NBR
V	FPM
W	NBR head anodized
Z	FPM head anodized

Connections		Size 100	Size 104
G1	G 1/2"	•	•
G2	G 3/4"	•	•
G3	G 1"	•	•
G4	1/2" NPT	•	•
G5	3/4" NPT	•	•
G6	1" NPT	•	•

Connections		Size 100	Size 104
G7	SAE 8 - 3/4" - 16 UNF	•	•
G8	SAE 12 - 1 1/16" - 12 UN	•	•
G9	SAE 16 - 1 5/16" - 12 UN	•	•

Filtration rating (filter media)

A03	Inorganic microfiber 3 µm	**M25**	Wire mesh 25 µm
A06	Inorganic microfiber 6 µm	**M60**	Wire mesh 60 µm
A10	Inorganic microfiber 10 µm	**M90**	Wire mesh 90 µm
A16	Inorganic microfiber 16 µm	**P10**	Resin impregnated paper 10 µm
A25	Inorganic microfiber 25 µm	**P25**	Resin impregnated paper 25 µm

Element Δp		Filter media Axx	Mxx	Pxx
N	10 bar	-	•	•
H	10 bar	•	-	-

Bypass valve	
E	3 bar
B	1.75 bar

Executions

Base	zerospark	
P01	**Z01**	MP Filtri standard
Pxx	**Zxx**	Customized

FILTER ELEMENT

Configuration example 1:	MFX100	2	A06	H	B		P01
Configuration example 2:	MFX100	4	P10	N	B	E	P01

Element series and size

MFX100 Filter Element with MYCLEAN feature

Element length

1 | **2** | **3** | **4**

Filtration rating (filter media)

A03	Inorganic microfiber 3 µm	**M25**	Wire mesh 25 µm
A06	Inorganic microfiber 6 µm	**M60**	Wire mesh 60 µm
A10	Inorganic microfiber 10 µm	**M90**	Wire mesh 90 µm
A16	Inorganic microfiber 16 µm	**P10**	Resin impregnated paper 10 µm
A25	Inorganic microfiber 25 µm	**P25**	Resin impregnated paper 25 µm

Element Δp		Filter media Axx	Mxx	Pxx
N	10 bar	-	•	•
H	10 bar	•	-	-

Seals	
B	NBR
V	FPM

Bypass valve	
E	3 bar
-	1.75 bar

Executions

Base	zerospark	
P01	**Z01**	MP Filtri standard
Pxx	**Zxx**	Customized

CLOGGING INDICATORS

See page 710-711

BVA	Axial pressure gauge	**BEA**	Electrical pressure indicator
BVR	Radial pressure gauge	**BEM**	Electrical pressure indicator
BVP	Visual pressure indicator with automatic reset	**BLA**	Electrical / visual pressure indicator
BVQ	Visual pressure indicator with manual reset		

ADDITIONAL FEATURES

See page 266

TE	Extension tube	**T5**	Filler plug M30x1.5
DFS	Diffuser with fast lock connection	**DPT**	Dipstick

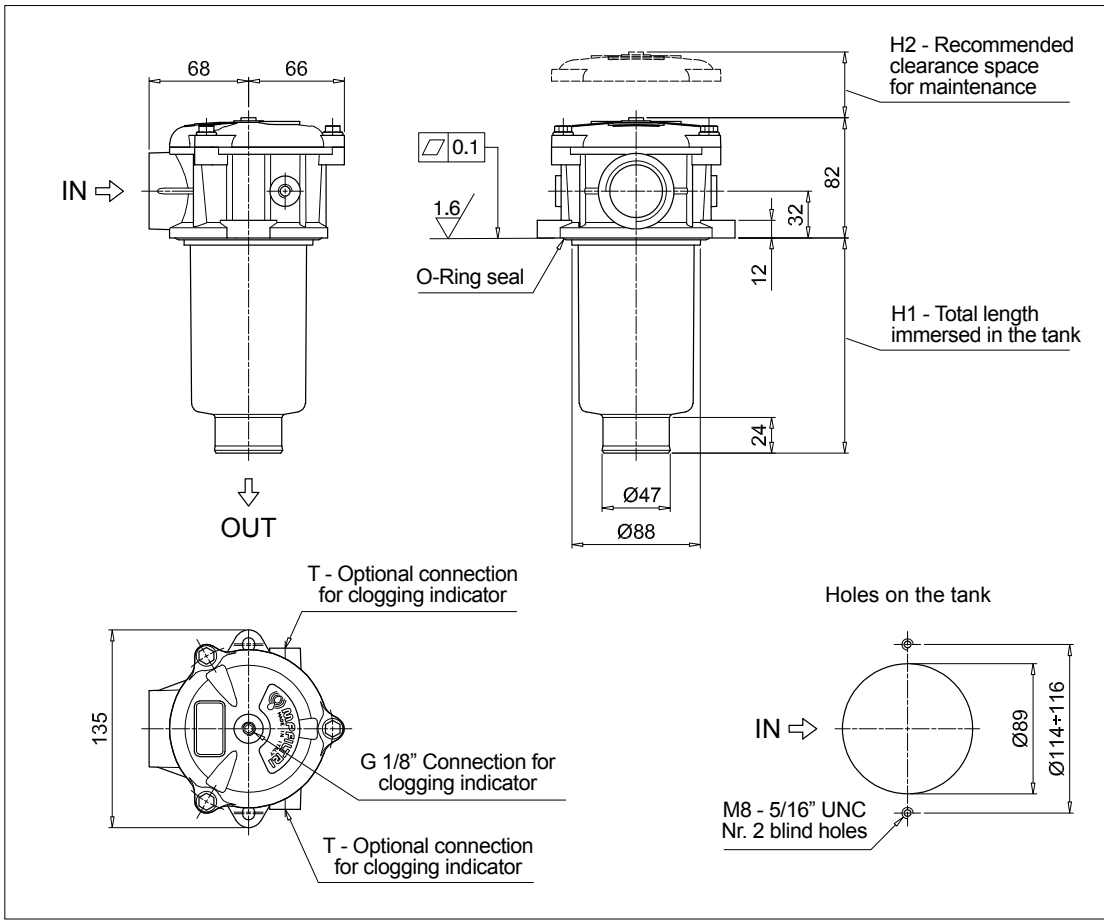

MPFX100		
Filter length	H1 [mm]	H2 [mm]
1	102	120
2	147	170
3	225	250
4	327	350

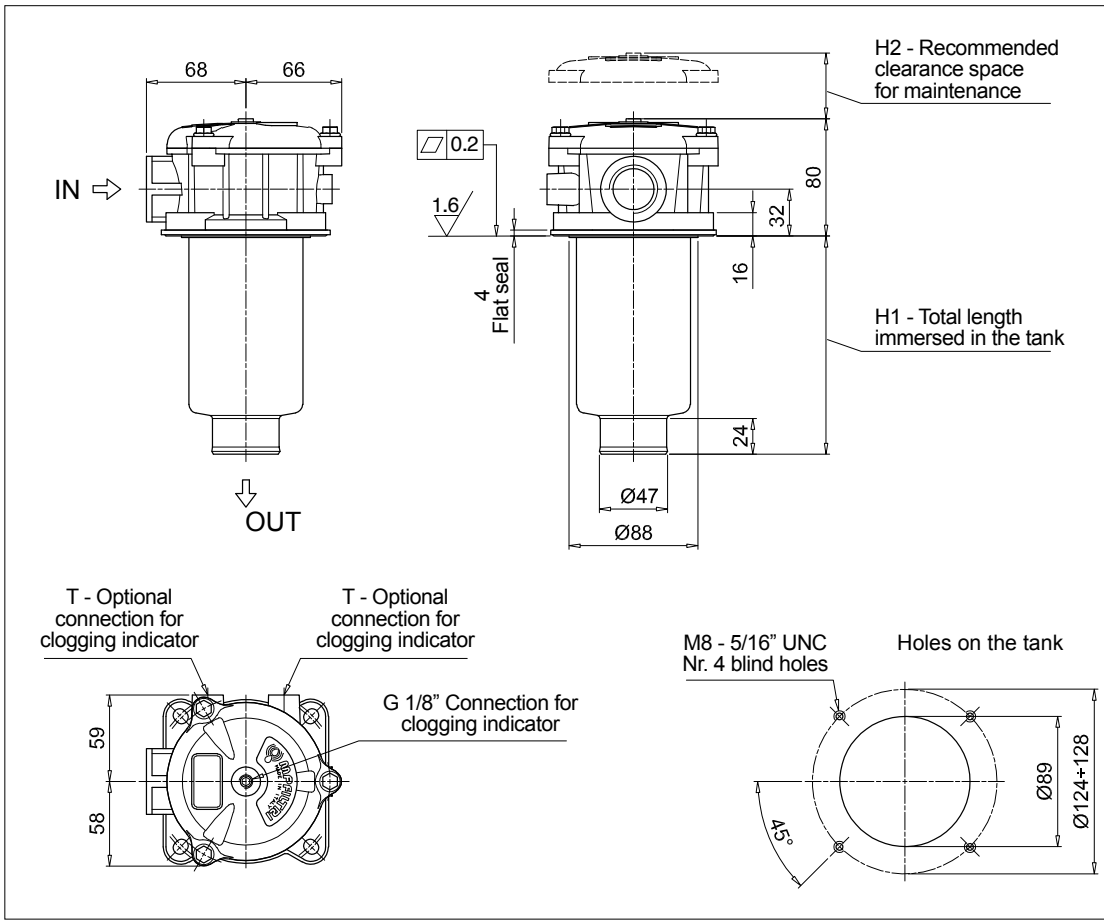

MPFX104		
Filter length	H1 [mm]	H2 [mm]
1	100	120
2	145	170
3	223	250
4	325	350

MPFX MPFX110

Designation & Ordering code

COMPLETE FILTER

Configuration example 1:	MPFX110	3	Z	G4	2	M25	H	B	P01
Configuration example 2:	MPFX110	4	A	G8	1	P10	N	E	P01

Series and size

MPFX110 Filter featuring MY CLEAN Filter Element

Length

1 | **2** | **3** | **4** |

Seals and treatments

A	NBR		**W**	NBR	head anodized
V	FPM		**Z**	FPM	head anodized

Main Connections		Aux size 1	Aux size 2
G1	G 1/2"	G 3/8"	G 1/2"
G2	G 3/4"		
G3	G 1"		
G4	1/2" NPT	3/8" NPT	1/2" NPT
G5	3/4" NPT		
G6	1" NPT		

Main Connections		Aux size 1	Aux size 2
G7	SAE 8 - 3/4" - 16 UNF	SAE 6 - 9/16"- 18 UNF	SAE 8 - 3/4"- 16 UNF
G8	SAE 12 - 1 1/16" - 12 UN		
G9	SAE 16 - 1 5/16" - 12 UN		
G10	G 1 1/4"	G 3/8"	G 1/2"
G11	1 1/4" NPT	3/8" NPT	1/2" NPT
G12	SAE 20 - 1 5/8" - 12 UN	SAE 6 - 9/16"- 18 UNF	SAE 8 - 3/4"- 16 UNF

Aux connection - see previous table

1	Aux size 1	**2**	Aux size 2

Filtration rating (filter media)

A03	Inorganic microfiber 3 µm	**M25**	Wire mesh 25 µm
A06	Inorganic microfiber 6 µm	**M60**	Wire mesh 60 µm
A10	Inorganic microfiber 10 µm	**M90**	Wire mesh 90 µm
A16	Inorganic microfiber 16 µm	**P10**	Resin impregnated paper 10 µm
A25	Inorganic microfiber 25 µm	**P25**	Resin impregnated paper 25 µm

Element Δp		Filter media Axx	Mxx	Pxx
N	10 bar	-	•	•
H	10 bar	•	-	-

Bypass valve	
E	3 bar
B	1.75 bar

Executions

Base	zerospark	
P01	**Z01**	MP Filtri standard
Pxx	**Zxx**	Customized

FILTER ELEMENT

Configuration example 1:	MFX100	3	M25	H	V		P01
Configuration example 2:	MFX100	4	P10	N	B	E	P01

Element series and size

MFX100 Filter Element with MY CLEAN feature

Element length

1 | **2** | **3** | **4** |

Filtration rating (filter media)

A03	Inorganic microfiber 3 µm	**M25**	Wire mesh 25 µm
A06	Inorganic microfiber 6 µm	**M60**	Wire mesh 60 µm
A10	Inorganic microfiber 10 µm	**M90**	Wire mesh 90 µm
A16	Inorganic microfiber 16 µm	**P10**	Resin impregnated paper 10 µm
A25	Inorganic microfiber 25 µm	**P25**	Resin impregnated paper 25 µm

Element Δp		Filter media Axx	Mxx	Pxx
N	10 bar	-	•	•
H	10 bar	•	-	-

Seals	
B	NBR
V	FPM

Bypass valve	
E	3 bar
-	1.75 bar

Executions

Base	zerospark	
P01	**Z01**	MP Filtri standard
Pxx	**Zxx**	Customized

CLOGGING INDICATORS

See page 710-711

BVA	Axial pressure gauge	**BEA**	Electrical pressure indicator
BVR	Radial pressure gauge	**BEM**	Electrical pressure indicator
BVP	Visual pressure indicator with automatic reset	**BLA**	Electrical / visual pressure indicator
BVQ	Visual pressure indicator with manual reset		

ADDITIONAL FEATURES

See page 266

TE	Extension tube	**T5**	Filler plug M30x1.5
DFS	Diffuser with fast lock connection	**DPT**	Dipstick

MPFX110		
Filter length	**H1 [mm]**	**H2 [mm]**
1	102	120
2	147	170
3	225	250
4	327	350

Connections	T
G1-G2-G3	G 1/8”
G4-G5-G6-G7-G8-G9	1/8” NPT
G10	G 1/8”
G11-G12	1/8” NPT

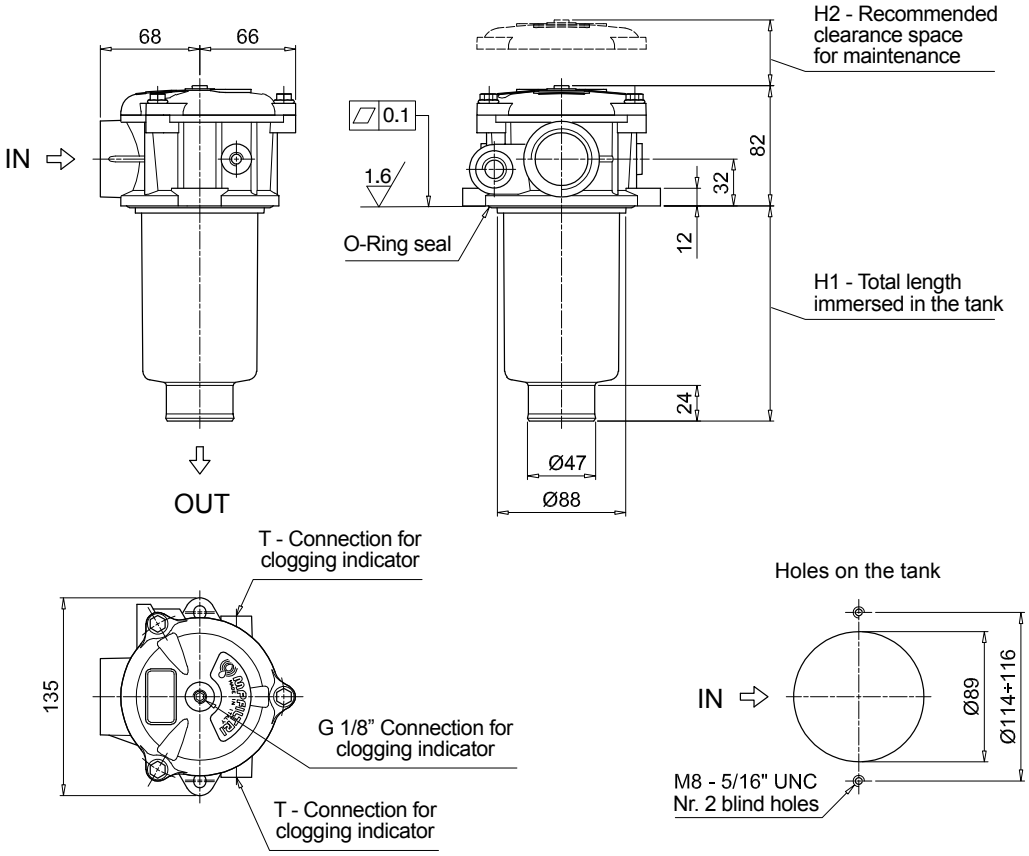

MPFX MPFX181 - MPFX191

Designation & Ordering code

COMPLETE FILTER

Configuration example 1:	MPFX181	1	A	G1	A25	H	E	P01
Configuration example 2:	MPFX191	2	V	G2	P10	N	B	P01

Series and size

MPFX181 | **MPFX191** Filter featuring MYCLEAN Filter Element

Length	Size 181	Size 191
1	•	-
2	•	•

Seals and treatments

A	NBR		**B**	NBR	flat seal on head
V	FPM		**D**	FPM	flat seal on head
W	NBR	head anodized	**L**	NBR	head anodized, flat seal on head
Z	FPM	head anodized	**M**	FPM	head anodized, flat seal on head

Connections

G1	G 1 1/4”	**G5**	1 1/2” NPT
G2	G 1 1/2”	**G7**	SAE 20 - 1 5/8” - 12 UN
G4	1 1/4” NPT	**G8**	SAE 24 - 1 7/8” - 12 UN

Filtration rating (filter media)

A03	Inorganic microfiber 3 µm	**M25**	Wire mesh 25 µm
A06	Inorganic microfiber 6 µm	**M60**	Wire mesh 60 µm
A10	Inorganic microfiber 10 µm	**M90**	Wire mesh 90 µm
A16	Inorganic microfiber 16 µm	**P10**	Resin impregnated paper 10 µm
A25	Inorganic microfiber 25 µm	**P25**	Resin impregnated paper 25 µm

Element Δp		Filter media Axx	Mxx	Pxx
N	10 bar	-	•	•
H	10 bar	•	-	-

Bypass valve	
E	3 bar
B	1.75 bar

Executions		
Base	zerospark	
P01	**Z01**	MP Filtri standard
Pxx	**Zxx**	Customized

FILTER ELEMENT

Configuration example 1:	MFX180	1	A25	H	B	E	P01
Configuration example 2:	MFX180	2	P10	N	V		P01

Element series and size

MFX180 Filter Element with MYCLEAN feature

Element length

1 | **2**

Filtration rating (filter media)

A03	Inorganic microfiber 3 µm	**M25**	Wire mesh 25 µm
A06	Inorganic microfiber 6 µm	**M60**	Wire mesh 60 µm
A10	Inorganic microfiber 10 µm	**M90**	Wire mesh 90 µm
A16	Inorganic microfiber 16 µm	**P10**	Resin impregnated paper 10 µm
A25	Inorganic microfiber 25 µm	**P25**	Resin impregnated paper 25 µm

Element Δp		Filter media Axx	Mxx	Pxx
N	10 bar	-	•	•
H	10 bar	•	-	-

Seals	
B	NBR
V	FPM

Bypass valve	
E	3 bar
-	1.75 bar

Executions		
Base	zerospark	
P01	**Z01**	MP Filtri standard
Pxx	**Zxx**	Customized

CLOGGING INDICATORS

See page 710-711

BVA	Axial pressure gauge	**BEA**	Electrical pressure indicator
BVR	Radial pressure gauge	**BEM**	Electrical pressure indicator
BVP	Visual pressure indicator with automatic reset	**BLA**	Electrical / visual pressure indicator
BVQ	Visual pressure indicator with manual reset		

ADDITIONAL FEATURES

See page 266

TE	Extension tube
T5	Filler plug M30x1.5

Dimensions

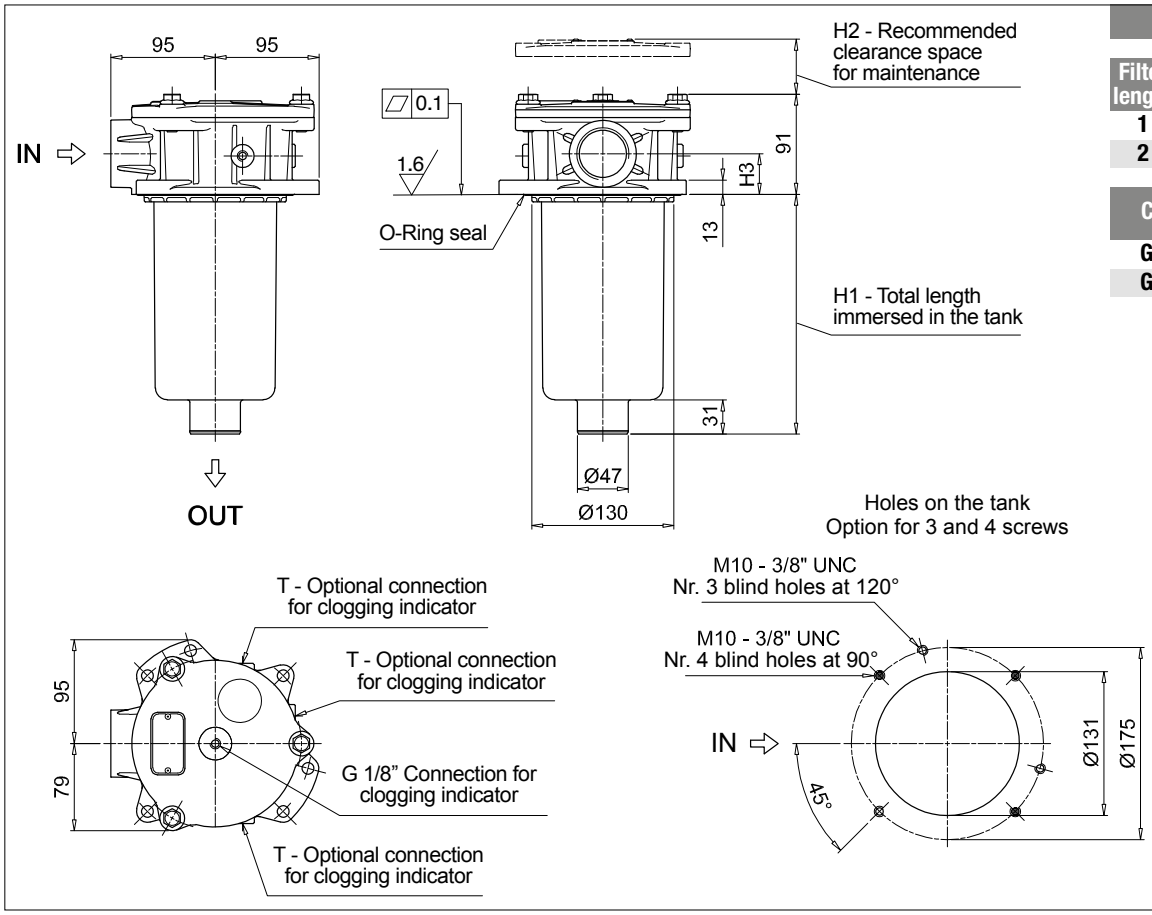

MPFX181

Filter length	H1 [mm]	H2 [mm]
1	235	255
2	448	475

Connections	H3 [mm]
G1 - G4 - G7	35
G2 - G5 - G8	37

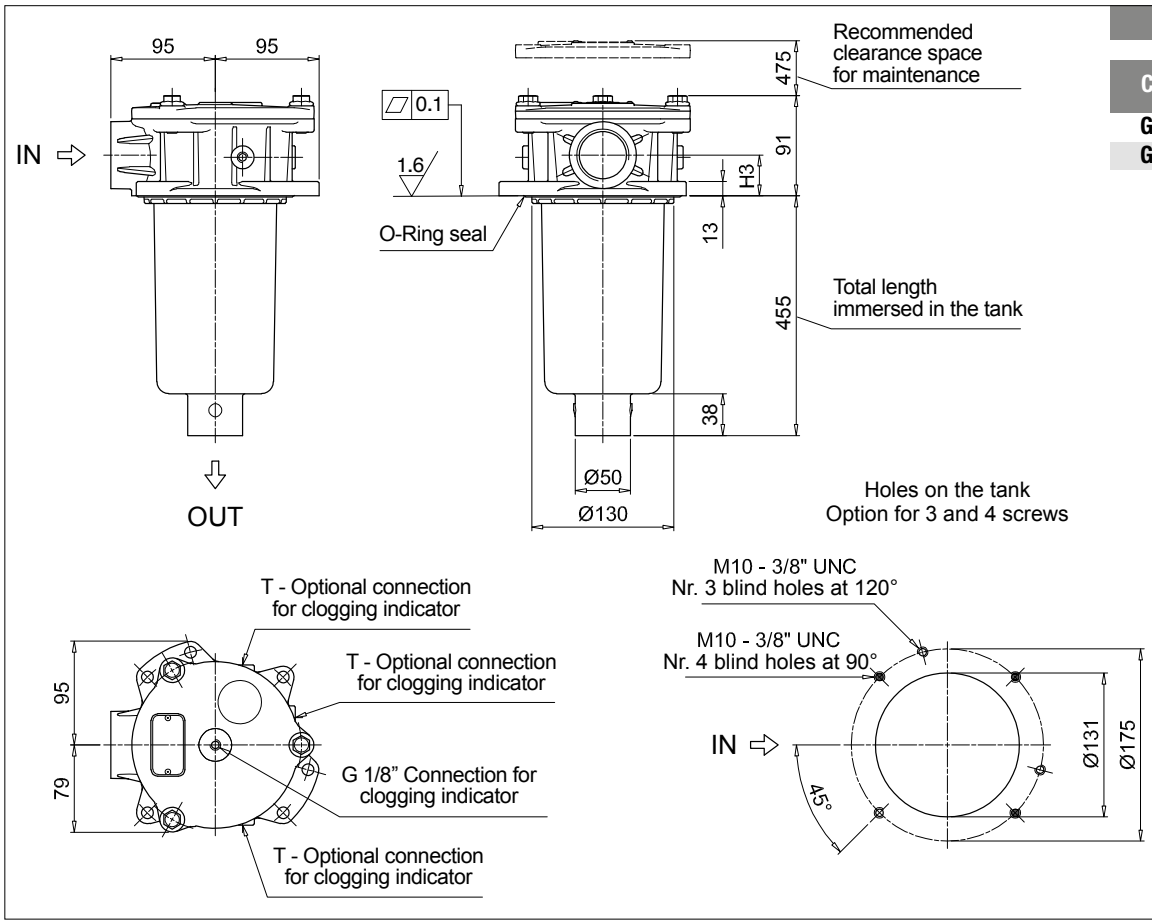

MPFX191

Connections	H3 [mm]
G1 - G4 - G7	35
G2 - G5 - G8	37

MPFX MPFX182 - MPFX192

Designation & Ordering code

COMPLETE FILTER

Configuration example 1:	MPFX182	1	A	G1	1	A25	H	E	P01
Configuration example 2:	MPFX192	2	V	G4	2	P10	N	B	P01

Series and size

MPFX182 | **MPFX192** Filter featuring MY CLEAN Filter Element

Length

	Size 182	Size 192
1	•	-
2	•	•

Seals and treatments

A	NBR		**B**	NBR	flat seal on head
V	FPM		**D**	FPM	flat seal on head
W	NBR	head anodized	**L**	NBR	head anodized, flat seal on head
Z	FPM	head anodized	**M**	FPM	head anodized, flat seal on head

Main Connections

	Main Connections	Aux size 1	Aux size 2
G1	G 1 1/4"	G 1/2"	G 3/4"
G4	1 1/4" NPT	1/2" NPT	3/4" NPT
G7	SAE 20 - 1 5/8" - 12 UN	SAE 8 - 3/16"- 16 UNF	SAE 12 - 1 1/16"- 12 UN

Aux connection - see previous table

1	Aux size 1	**2**	Aux size 2

Filtration rating (filter media)

A03	Inorganic microfiber 3 µm	**M25**	Wire mesh 25 µm
A06	Inorganic microfiber 6 µm	**M60**	Wire mesh 60 µm
A10	Inorganic microfiber 10 µm	**M90**	Wire mesh 90 µm
A16	Inorganic microfiber 16 µm	**P10**	Resin impregnated paper 10 µm
A25	Inorganic microfiber 25 µm	**P25**	Resin impregnated paper 25 µm

Element Δp

		Filter media Axx	Mxx	Pxx
N	10 bar	-	•	•
H	10 bar	•	-	-

Bypass valve

E	3 bar
B	1.75 bar

Executions

Base	zerospark	
P01	**Z01**	MP Filtri standard
Pxx	**Zxx**	Customized

FILTER ELEMENT

Configuration example 1:	MFX180	1	A25	H	B	E	P01
Configuration example 2:	MFX180	2	P10	N	V		P01

Element series and size

MFX180 Filter Element with MY CLEAN feature

Element length

1	**2**

Filtration rating (filter media)

A03	Inorganic microfiber 3 µm	**M25**	Wire mesh 25 µm
A06	Inorganic microfiber 6 µm	**M60**	Wire mesh 60 µm
A10	Inorganic microfiber 10 µm	**M90**	Wire mesh 90 µm
A16	Inorganic microfiber 16 µm	**P10**	Resin impregnated paper 10 µm
A25	Inorganic microfiber 25 µm	**P25**	Resin impregnated paper 25 µm

Element Δp

		Filter media Axx	Mxx	Pxx
N	10 bar	-	•	•
H	10 bar	•	-	-

Seals

B	NBR
V	FPM

Bypass valve

E	3 bar
-	1.75 bar

Executions

Base	zerospark	
P01	**Z01**	MP Filtri standard
Pxx	**Zxx**	Customized

CLOGGING INDICATORS

See page 710-711

BVA	Axial pressure gauge	**BEA**	Electrical pressure indicator
BVR	Radial pressure gauge	**BEM**	Electrical pressure indicator
BVP	Visual pressure indicator with automatic reset	**BLA**	Electrical / visual pressure indicator
BVQ	Visual pressure indicator with manual reset		

ADDITIONAL FEATURES

See page 266

TE	Extension tube
T5	Filler plug M30x1.5

Dimensions

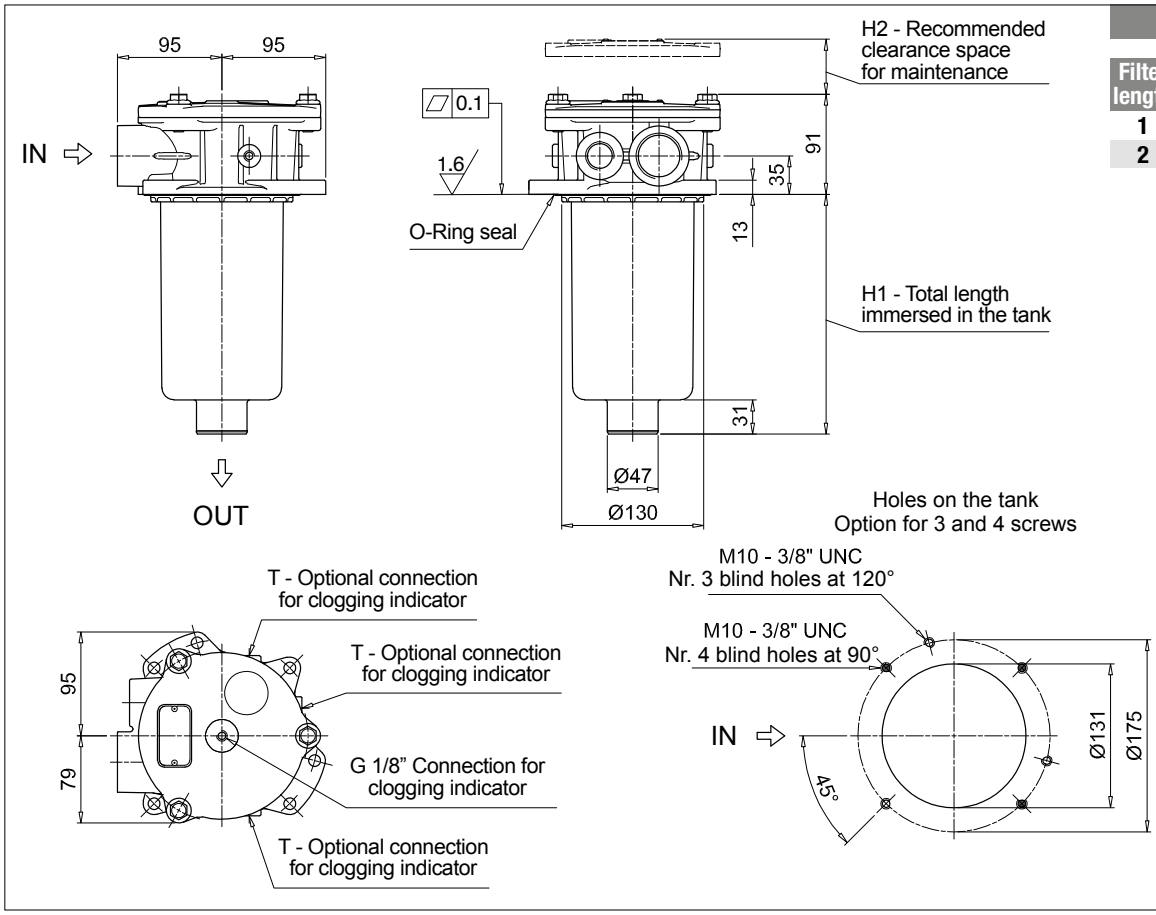

MPFX182

Filter length	H1 [mm]	H2 [mm]
1	235	255
2	448	475

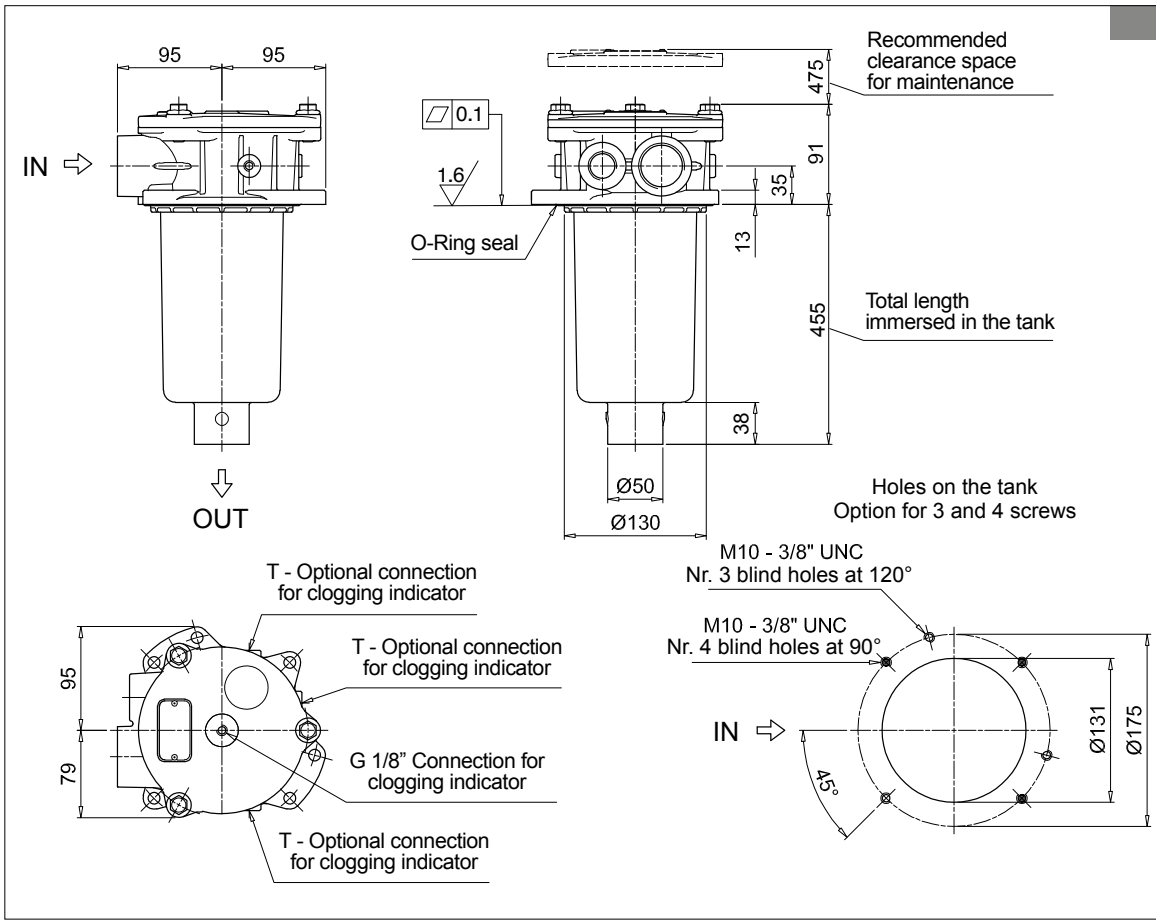

MPFX192

MPFX MPFX184 - MPFX194

Designation & Ordering code

COMPLETE FILTER

Configuration example 1:	MPFX184	1	A	G1	A25	H	E	P01
Configuration example 2:	MPFX194	2	V	F3	P10	N	B	P01

Series and size

MPFX184 | **MPFX194** Filter featuring MYCLEAN Filter Element

Length	Size 184	Size 194
1	•	-
2	•	•

Seals and treatments

A	NBR		**W**	NBR	head anodized
V	FPM		**Z**	FPM	head anodized

Main Connections	Rear connections	Main Connections	Rear connections
G1 G 1 1/4"	-	**G13** G 1 1/2"	-
G2 G 1 1/4"	G 1 1/4"	**G14** G 1 1/2"	G 1 1/4"
G4 1 1/4" NPT	-	**G15** 1 1/2" NPT	-
G5 1 1/4" NPT	1 1/4" NPT	**G16** 1 1/2" NPT	1 1/4" NPT
G7 SAE 20 - 1 5/8" - 12 UN	-	**F1** 1 1/2" SAE 3000 psi/M	-
G8 SAE 20 - 1 5/8" - 12 UN	SAE 20 - 1 5/8" - 12 UN	**F2** 1 1/2" SAE 3000 psi/UNC	-
G10 SAE 24 - 1 7/8" - 12 UN	-	**F3** 1 1/2" SAE 3000 psi/M	1 1/2" SAE 3000 psi/M
G11 SAE 24 - 1 7/8" - 12 UN	SAE 20 - 1 5/8" - 12 UN	**F4** 1 1/2" SAE 3000 psi/UNC	1 1/2" SAE 3000 psi/UNC

Filtration rating (filter media)

A03	Inorganic microfiber 3 µm	**M25**	Wire mesh 25 µm
A06	Inorganic microfiber 6 µm	**M60**	Wire mesh 60 µm
A10	Inorganic microfiber 10 µm	**M90**	Wire mesh 90 µm
A16	Inorganic microfiber 16 µm	**P10**	Resin impregnated paper 10 µm
A25	Inorganic microfiber 25 µm	**P25**	Resin impregnated paper 25 µm

Element Δp	Filter media Axx	Mxx	Pxx
N 10 bar	-	•	•
H 10 bar	•	-	-

Bypass valve
E 3 bar
B 1.75 bar

Executions: Base	zerospark	
P01	**Z01**	MP Filtri standard
Pxx	**Zxx**	Customized

FILTER ELEMENT

Configuration example 1:	MFX180	1	A25	H	B	E	P01
Configuration example 2:	MFX180	2	P10	N	V		P01

Element series and size

MFX180 Filter Element with MYCLEAN feature

Element length

1 | **2**

Filtration rating (filter media)

A03	Inorganic microfiber 3 µm	**M25**	Wire mesh 25 µm
A06	Inorganic microfiber 6 µm	**M60**	Wire mesh 60 µm
A10	Inorganic microfiber 10 µm	**M90**	Wire mesh 90 µm
A16	Inorganic microfiber 16 µm	**P10**	Resin impregnated paper 10 µm
A25	Inorganic microfiber 25 µm	**P25**	Resin impregnated paper 25 µm

Element Δp	Filter media Axx	Mxx	Pxx
N 10 bar	-	•	•
H 10 bar	•	-	-

Seals
B NBR
V FPM

Bypass valve
E 3 bar
- 1.75 bar

Executions: Base	zerospark	
P01	**Z01**	MP Filtri standard
Pxx	**Zxx**	Customized

CLOGGING INDICATORS

See page 710-711

BVA	Axial pressure gauge	**BEA**	Electrical pressure indicator
BVR	Radial pressure gauge	**BEM**	Electrical pressure indicator
BVP	Visual pressure indicator with automatic reset	**BLA**	Electrical / visual pressure indicator
BVQ	Visual pressure indicator with manual reset		

ADDITIONAL FEATURES

See page 266

TE	Extension tube
T5	Filler plug M30x1.5

Dimensions

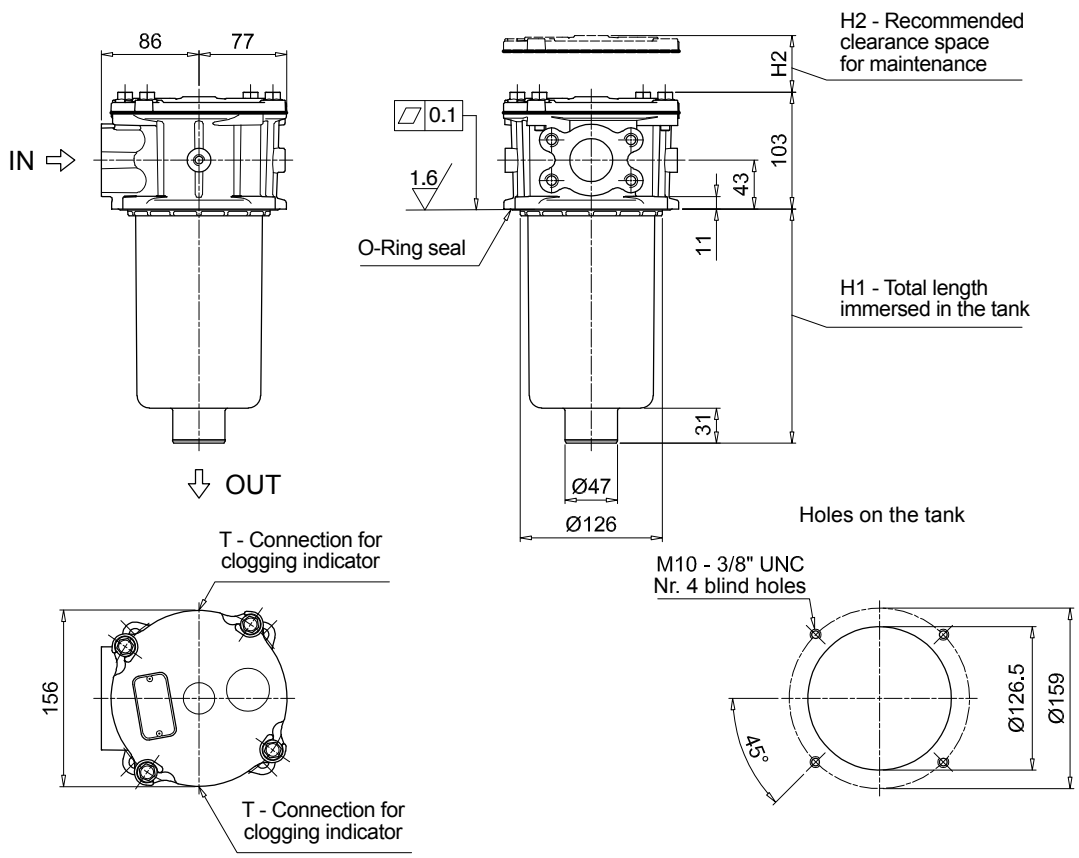

MPFX184

1 connection port

Filter length	H1 [mm]	H2 [mm]
1	232	260
2	445	480

Connection	T
G1	G 1/8"
G4 - G7 - G10	1/8" NPT
G13	G 1/8"
G15 - F1 - F2	1/8" NPT

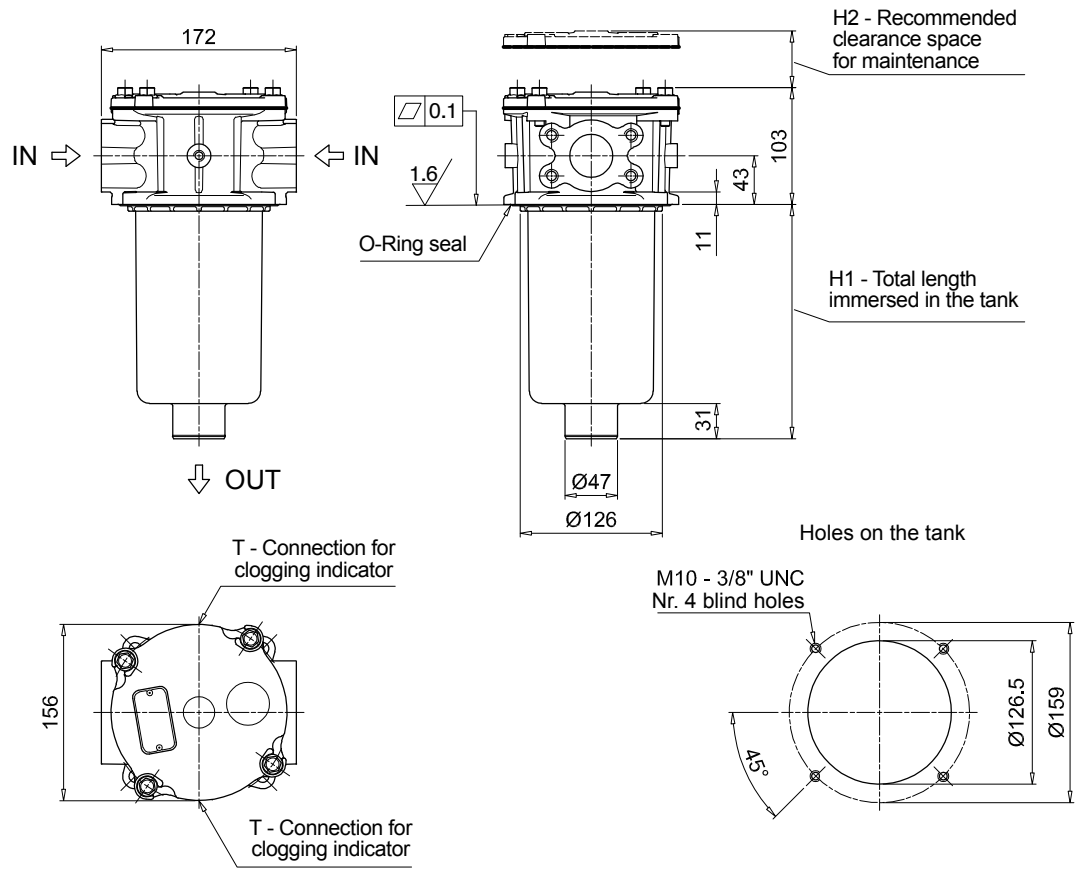

MPFX184

2 connection ports

Filter length	H1 [mm]	H2 [mm]
1	232	260
2	445	480

Connection	T
G2	G 1/8"
G5 - G8 - G11	1/8" NPT
G14	G 1/8"
G16 - F3 - F4	1/8" NPT

Dimensions

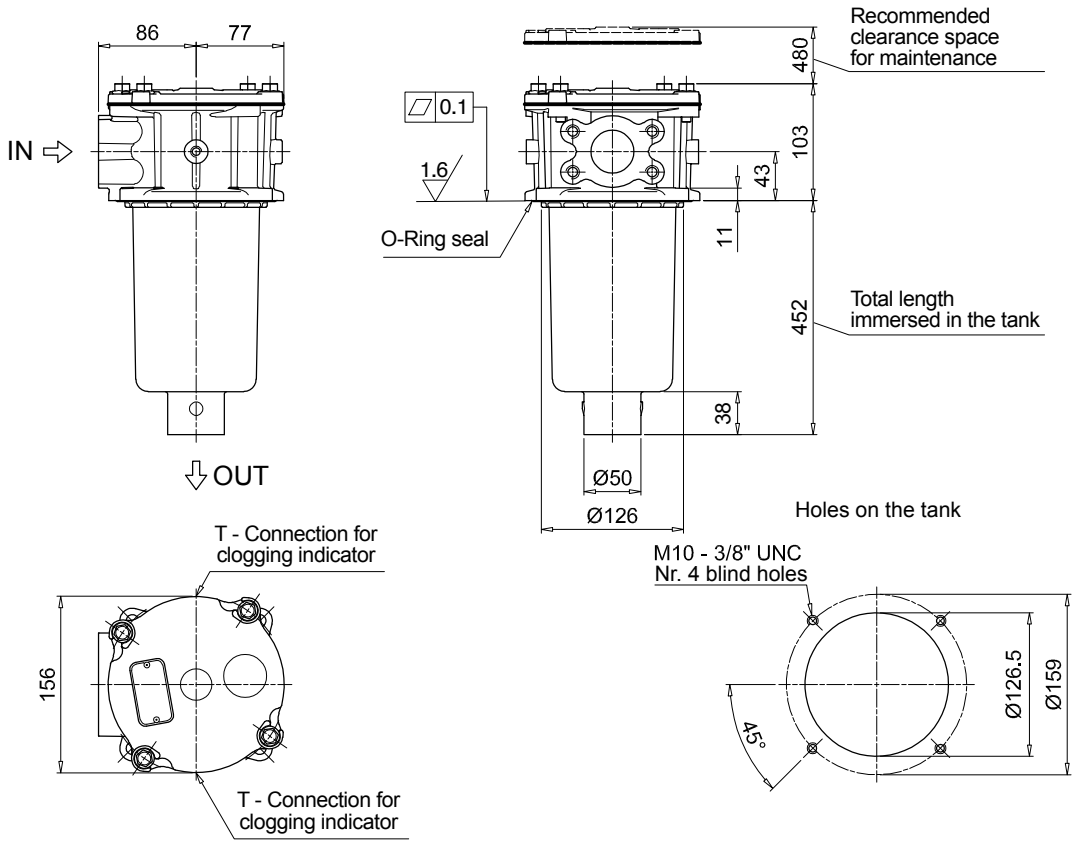

MPFX194	
1 connection port	
Connections	**T**
G1	G 1/8”
G4 - G7 - G10	1/8” NPT
G13	G 1/8”
G15 - F1 - F2	1/8” NPT

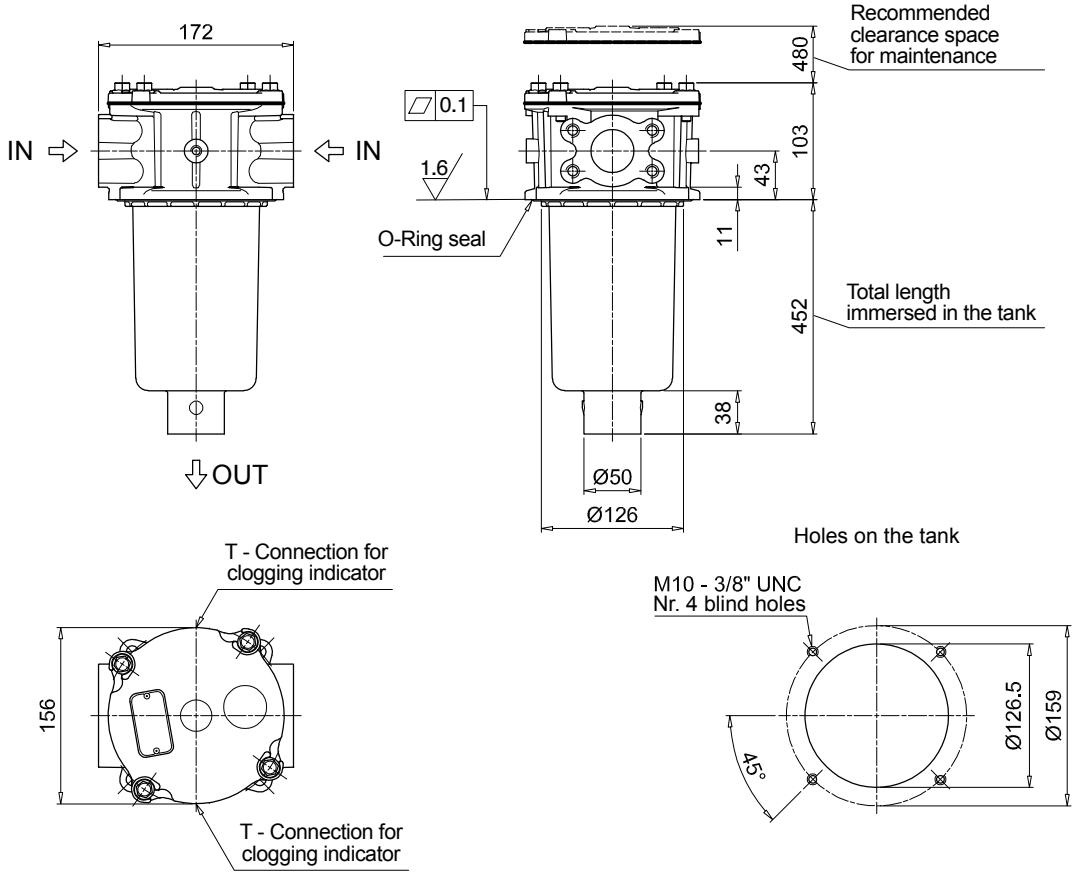

MPFX194	
2 connection ports	
Connections	**T**
G2	G 1/8”
G5 - G8 - G11	1/8” NPT
G14	G 1/8”
G16 - F3 - F4	1/8” NPT

MPFX MPFX400

Designation & Ordering code

COMPLETE FILTER

Configuration example 1:	MPFX400	1	A	G9	A25	H	B	P01
Configuration example 2:	MPFX400	2	V	G4	P10	N	E	P01

Series and size

MPFX400 Filter featuring MYCLEAN Filter Element

Length

1 | **2** | **3** |

Seals and treatments

A	NBR
V	FPM
W	NBR head anodized
Z	FPM head anodized

Connections

G1	G 1 1/4”	**G6**	2” NPT
G2	G 1 1/2”	**G7**	SAE 20 - 1 5/8” - 12 UN
G3	G 2”	**G8**	SAE 24 - 1 7/8” - 12 UN
G4	1 1/4” NPT	**G9**	SAE 32 - 2 1/2” - 12 UN
G5	1 1/2” NPT		

Filtration rating (filter media)

A03	Inorganic microfiber 3 µm	**M25**	Wire mesh 25 µm
A06	Inorganic microfiber 6 µm	**M60**	Wire mesh 60 µm
A10	Inorganic microfiber 10 µm	**M90**	Wire mesh 90 µm
A16	Inorganic microfiber 16 µm	**P10**	Resin impregnated paper 10 µm
A25	Inorganic microfiber 25 µm	**P25**	Resin impregnated paper 25 µm

Element Δp		Filter media Axx	Mxx	Pxx
N	10 bar	-	•	•
H	10 bar	•	-	-

Bypass valve

E	3 bar
B	1.75 bar

Executions

Base	zerospark	
P01	**Z01**	MP Filtri standard
Pxx	**Zxx**	Customized

FILTER ELEMENT

Configuration example 1:	MFX400	1	A25	H	B		P01
Configuration example 2:	MFX400	2	P10	N	V	E	P01

Element series and size

MFX400 Filter Element with MYCLEAN feature

Element length

1 | **2** | **3** |

Filtration rating (filter media)

A03	Inorganic microfiber 3 µm	**M25**	Wire mesh 25 µm
A06	Inorganic microfiber 6 µm	**M60**	Wire mesh 60 µm
A10	Inorganic microfiber 10 µm	**M90**	Wire mesh 90 µm
A16	Inorganic microfiber 16 µm	**P10**	Resin impregnated paper 10 µm
A25	Inorganic microfiber 25 µm	**P25**	Resin impregnated paper 25 µm

Element Δp		Filter media Axx	Mxx	Pxx
N	10 bar	-	•	•
H	10 bar	•	-	-

Seals

B	NBR
V	FPM

Bypass valve

E	3 bar
-	1.75 bar

Executions

Base	zerospark	
P01	**Z01**	MP Filtri standard
Pxx	**Zxx**	Customized

CLOGGING INDICATORS

See page 710-711

BVA	Axial pressure gauge	**BEA**	Electrical pressure indicator
BVR	Radial pressure gauge	**BEM**	Electrical pressure indicator
BVP	Visual pressure indicator with automatic reset	**BLA**	Electrical / visual pressure indicator
BVQ	Visual pressure indicator with manual reset		

ADDITIONAL FEATURES

See page 266

T5	Filler plug M30x1.5

MPFX400			
Filter length	H1 [mm]	H2 [mm]	D [mm]
1	187	210	50
2	252	270	63
3	300	315	63

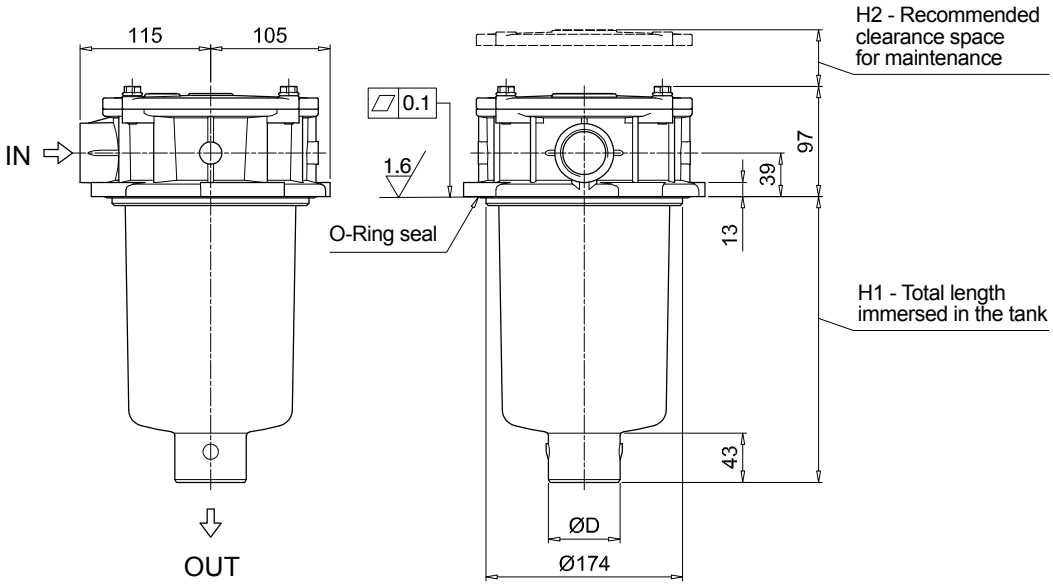

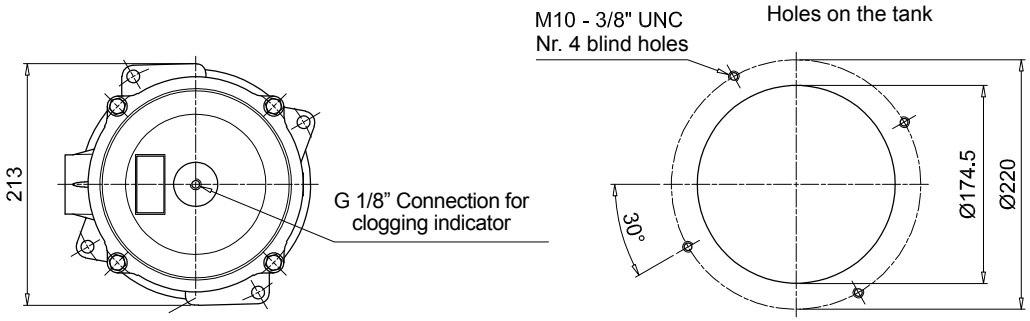

MPFX MPFX410

Designation & Ordering code

COMPLETE FILTER

Configuration example 1:	MPFX410	1	V	G4	1	P10	N	E	P01
Configuration example 2:	MPFX410	1	A	G1	1	A25	H	B	P01

Series and size

MPFX410 Filter featuring MYCLEAN Filter Element

Length

1 | **2** | **3** |

Seals and treatments

A	NBR
V	FPM
W	NBR head anodized
Z	FPM head anodized

Main Connections		Aux size 1
G1	G 1 1/4"	G 1"
G4	1 1/4" NPT	1" NPT
G7	SAE 20 - 1 5/8" - 12 UN	SAE 16 - 1 5/16"- 12 UN

Aux connection - see previous table

1 Aux size 1

Filtration rating (filter media)

A03	Inorganic microfiber 3 µm	**M25**	Wire mesh 25 µm
A06	Inorganic microfiber 6 µm	**M60**	Wire mesh 60 µm
A10	Inorganic microfiber 10 µm	**M90**	Wire mesh 90 µm
A16	Inorganic microfiber 16 µm	**P10**	Resin impregnated paper 10 µm
A25	Inorganic microfiber 25 µm	**P25**	Resin impregnated paper 25 µm

Element Δp		Filter media Axx	Mxx	Pxx
N	10 bar	-	•	•
H	10 bar	•	-	-

Bypass valve	
E	3 bar
B	1.75 bar

Executions		
Base	zerospark	
P01	**Z01**	MP Filtri standard
Pxx	**Zxx**	Customized

FILTER ELEMENT

Configuration example 1:	MFX400	1	P10	N	V	E	P01
Configuration example 2:	MFX400	1	A25	H	B		P01

Element series and size

MFX400 Filter Element with MYCLEAN feature

Element length

1 | **2** | **3** |

Filtration rating (filter media)

A03	Inorganic microfiber 3 µm	**M25**	Wire mesh 25 µm
A06	Inorganic microfiber 6 µm	**M60**	Wire mesh 60 µm
A10	Inorganic microfiber 10 µm	**M90**	Wire mesh 90 µm
A16	Inorganic microfiber 16 µm	**P10**	Resin impregnated paper 10 µm
A25	Inorganic microfiber 25 µm	**P25**	Resin impregnated paper 25 µm

Element Δp		Filter media Axx	Mxx	Pxx
N	10 bar	-	•	•
H	10 bar	•	-	-

Seals	
B	NBR
V	FPM

Bypass valve	
E	3 bar
-	1.75 bar

Executions		
Base	zerospark	
P01	**Z01**	MP Filtri standard
Pxx	**Zxx**	Customized

CLOGGING INDICATORS

See page 710-711

BVA	Axial pressure gauge	**BEA**	Electrical pressure indicator
BVR	Radial pressure gauge	**BEM**	Electrical pressure indicator
BVP	Visual pressure indicator with automatic reset	**BLA**	Electrical / visual pressure indicator
BVQ	Visual pressure indicator with manual reset		

ADDITIONAL FEATURES

See page 266

T5 Filler plug M30x1.5

Dimensions

MPFX410			
Filter length	H1 [mm]	H2 [mm]	D [mm]
1	187	210	50
2	252	270	63
3	300	315	63

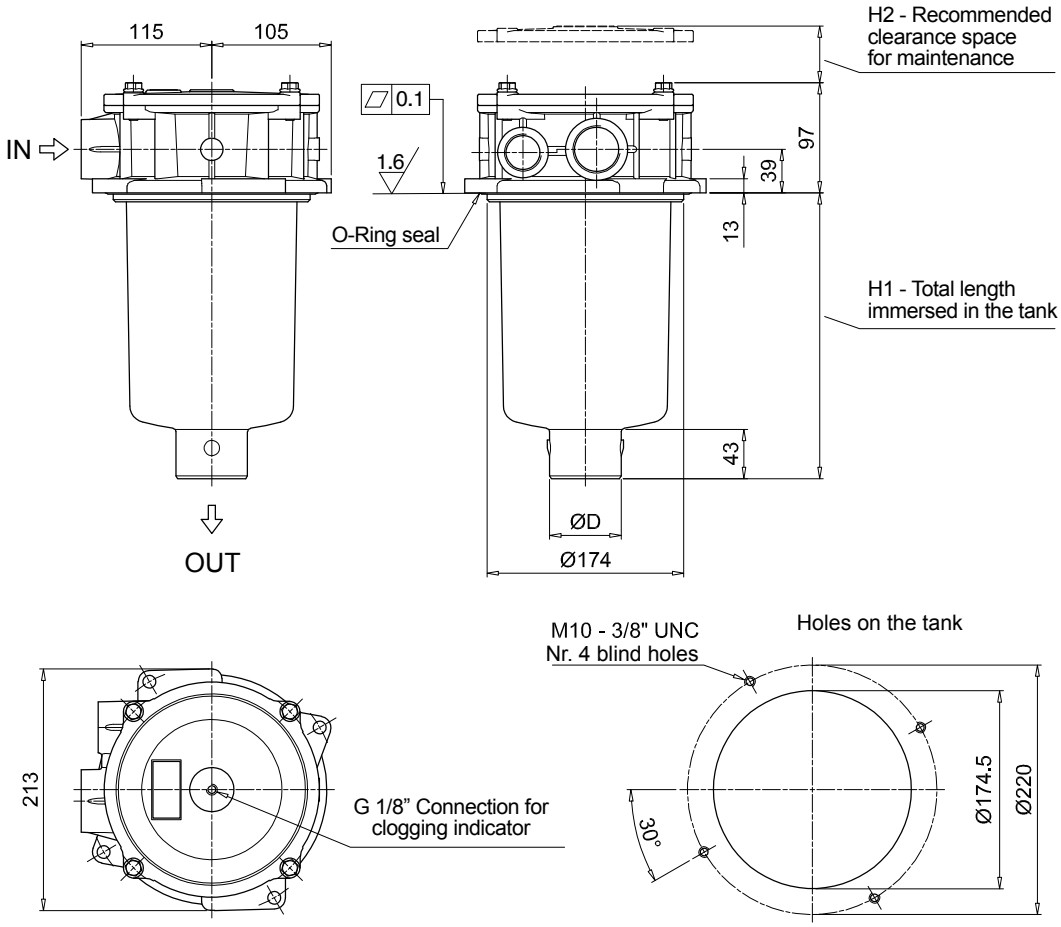

MPFX MPFX450 - MPFX451 - MPFX750

Designation & Ordering code

COMPLETE FILTER

Configuration example 1:	MPFX450	1	A	G1	A25	H	B	P01
Configuration example 2:	MPFX750	1	V	F2	P10	N	E	P01

Series and size

MPFX450 | MPFX451 | MPFX750 Filter featuring MY CLEAN Filter Element

Length	MPFX 450	MPFX 451	MPFX 750
1	•	•	•
2	•	•	-
3	•	•	-

Seals and treatments

A	NBR	**W**	NBR	head anodized
V	FPM	**Z**	FPM	head anodized

Connections		Aux (only size 451)
G1	G 2”	G 3/4”
G4	2” NPT	3/4” NPT
G7	SAE 32 - 2 1/2” - 12 UN	SAE 12 - 1 1/16” - 12 UN
F1	2” SAE 3000 psi/M	G 3/4”
F2	2” SAE 3000 psi/UNC	3/4” NPT

Filtration rating (filter media)

A03	Inorganic microfiber 3 µm	**M25**	Wire mesh 25 µm	
A06	Inorganic microfiber 6 µm	**M60**	Wire mesh 60 µm	
A10	Inorganic microfiber 10 µm	**M90**	Wire mesh 90 µm	
A16	Inorganic microfiber 16 µm	**P10**	Resin impregnated paper 10 µm	
A25	Inorganic microfiber 25 µm	**P25**	Resin impregnated paper 25 µm	

Element Δp		Filter media Axx	Mxx	Pxx
N	10 bar	-	•	•
H	10 bar	•	-	-

Bypass valve	
E	3 bar
B	1.75 bar

Executions

Base	zerospark	
P01	**Z01**	MP Filtri standard
Pxx	**Zxx**	Customized

FILTER ELEMENT

Configuration example 1:	MFX400	1	A25	H	B		P01
Configuration example 2:	MFX750	1	P10	N	V	E	P01

Element series and size

MFX400 | MFX750 Filter Element with MY CLEAN feature

Element length	MPFX 450	MPFX 451	MPFX 750
1	•	•	•
2	•	•	-
3	•	•	-

Filtration rating (filter media)

A03	Inorganic microfiber 3 µm	**M25**	Wire mesh 25 µm	
A06	Inorganic microfiber 6 µm	**M60**	Wire mesh 60 µm	
A10	Inorganic microfiber 10 µm	**M90**	Wire mesh 90 µm	
A16	Inorganic microfiber 16 µm	**P10**	Resin impregnated paper 10 µm	
A25	Inorganic microfiber 25 µm	**P25**	Resin impregnated paper 25 µm	

Element Δp		Filter media Axx	Mxx	Pxx
N	10 bar	-	•	•
H	10 bar	•	-	-

Seals	
B	NBR
V	FPM

Bypass valve	
E	3 bar
-	1.75 bar

Executions

Base	zerospark	
P01	**Z01**	MP Filtri standard
Pxx	**Zxx**	Customized

CLOGGING INDICATORS

See page 710-711

BVA	Axial pressure gauge	**BEA**	Electrical pressure indicator
BVR	Radial pressure gauge	**BEM**	Electrical pressure indicator
BVP	Visual pressure indicator with automatic reset	**BLA**	Electrical / visual pressure indicator
BVQ	Visual pressure indicator with manual reset		

ADDITIONAL FEATURES

See page 266

T5	Filler plug M30x1.5

Dimensions

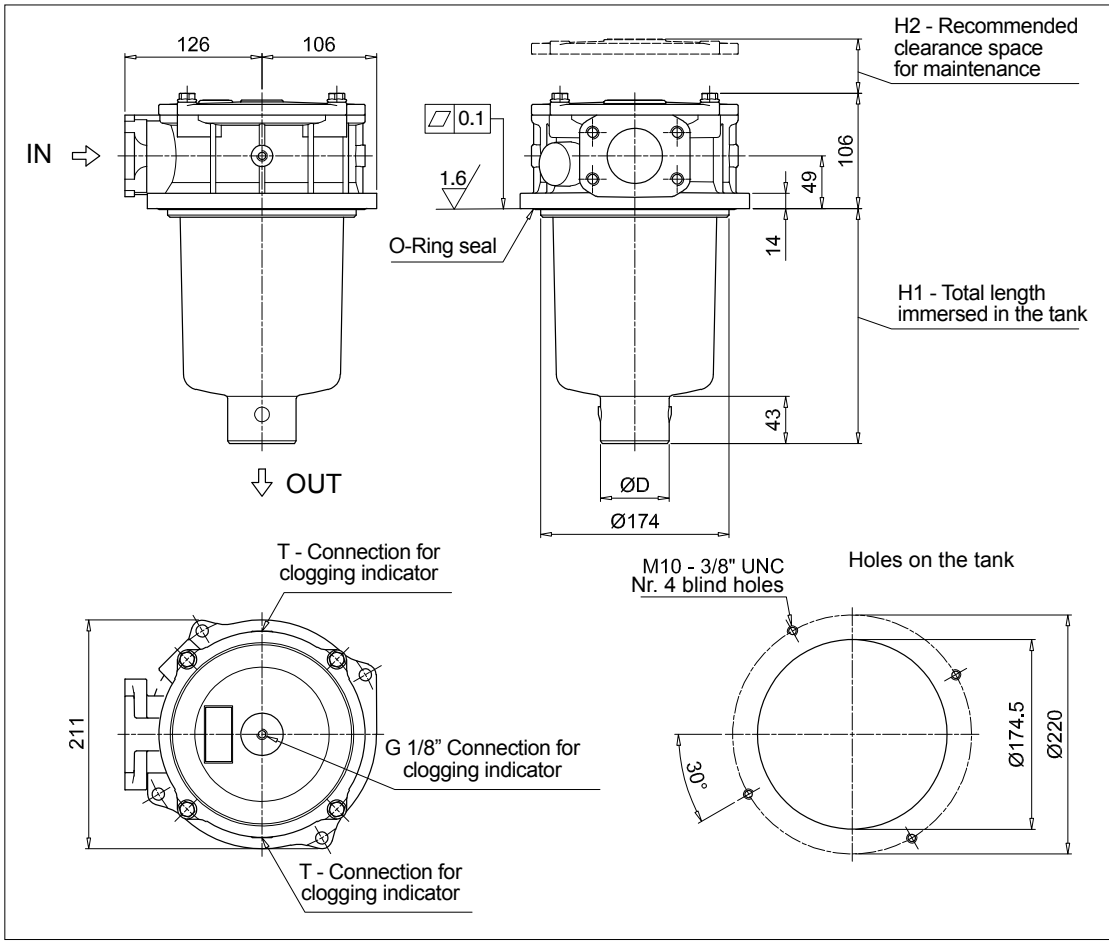

MPFX450

Filter length	H1 [mm]	H2 [mm]	D [mm]
1	187	210	50
2	252	270	63
3	300	315	63

Connections	T
G1	G 1/8"
G4 - G7	1/8" NPT
F1	G 1/8"
F2	1/8" NPT

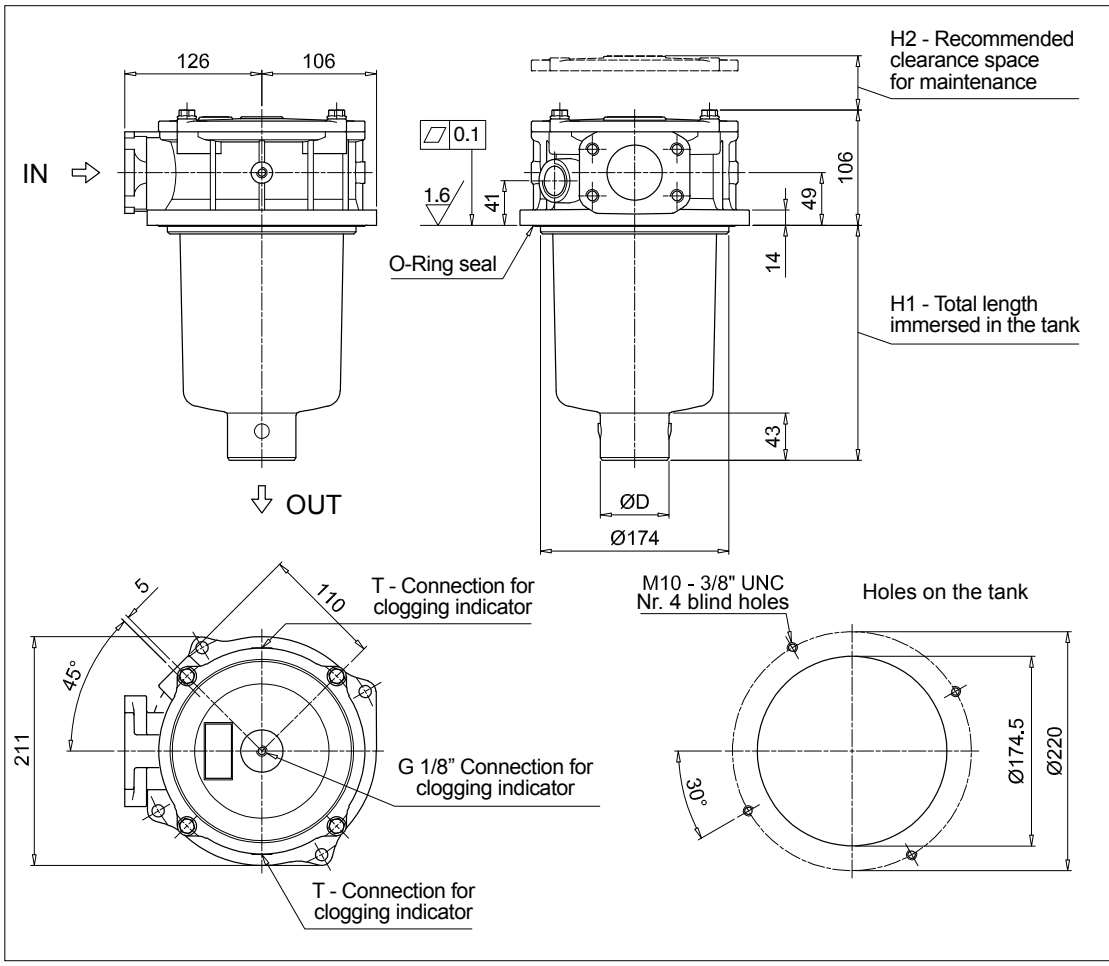

MPFX451

Filter length	H1 [mm]	H2 [mm]	D [mm]
1	187	210	50
2	252	270	63
3	300	315	63

Connections	T
G1	G 1/8"
G4 - G7	1/8" NPT
F1	G 1/8"
F2	1/8" NPT

Dimensions

MPFX750

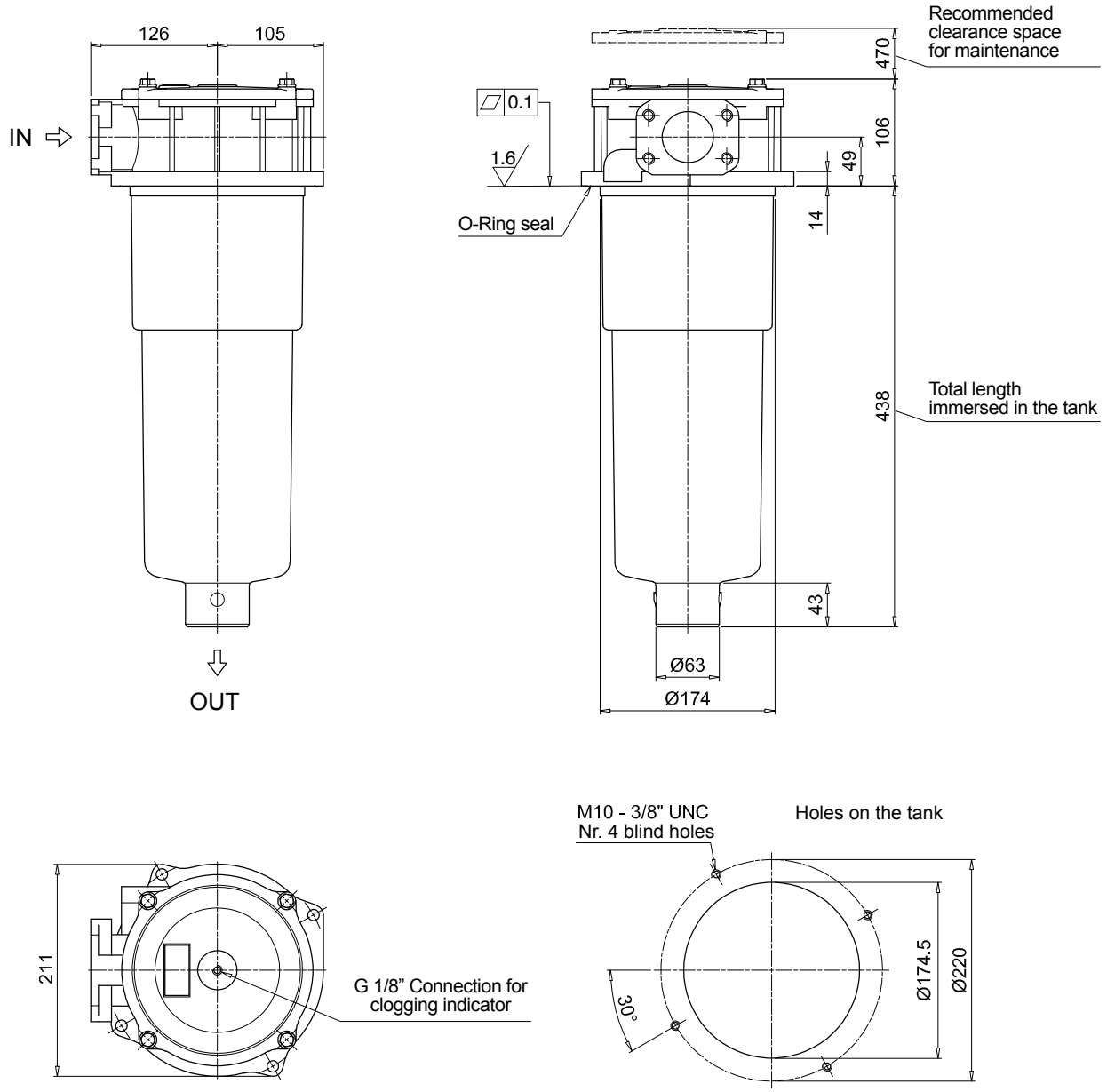

Order number for spare parts

MPFX 100

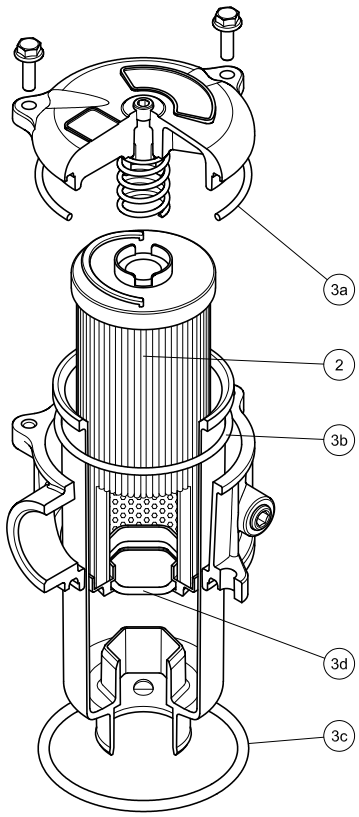

MPFX 181

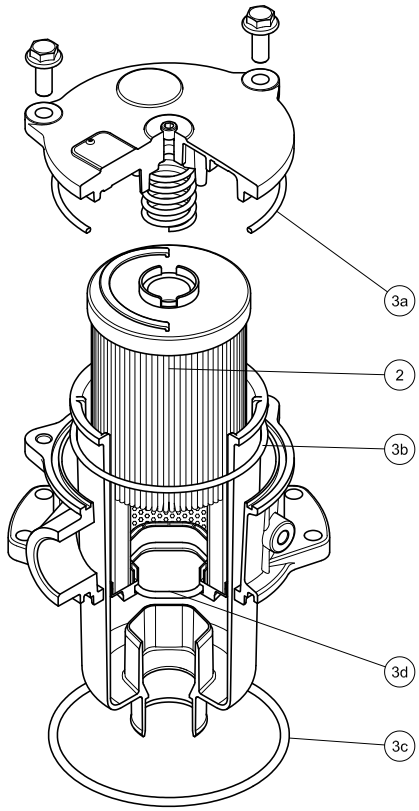

O-RING SEAL

Item:	Q.ty: 1 pc. 2	Q.ty: 1 pc. 3 (3a ÷ 3d)	
Filter series	**Filter element**	**Seal Kit code number NBR**	**FPM**
MPFX 030	See order table	02050675	02050676
MPFX 100-110		02050677	02050678
MPFX 181-182		02050681	02050682
MPFX 184		02050685	02050686
MPFX 191-192		02050683	02050684
MPFX 194		02050687	02050688
MPFX 400-410		02050695	02050696
MPFX 450-451		02050697	02050698
MPFX 750		02050699	02050700

MPFX 104

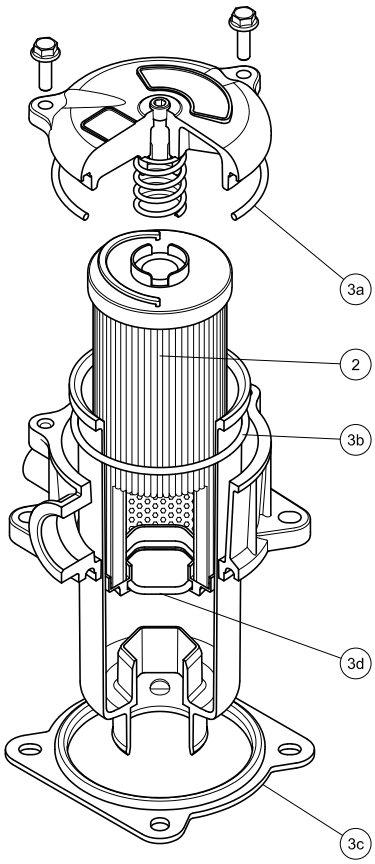

MPFX 181

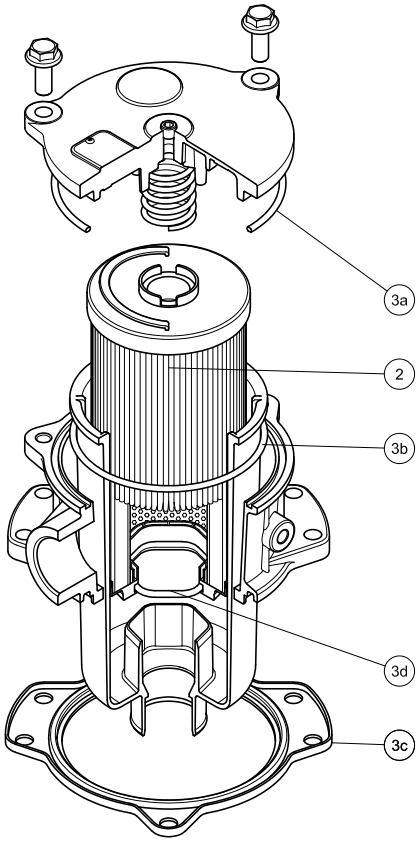

FLAT SEAL

Item:	Q.ty: 1 pc. 2	Q.ty: 1 pc. 3 (3a ÷ 3d)	
Filter series	**Filter element**	**Seal Kit code number NBR**	**FPM**
MPFX 104	See order table	02050679	02050680
MPFX 181-182		02050691	02050692
MPFX 191-192		02050691	02050692

THE X CONCEPT FOR OUR FILTERS

**Protect the performance of your system with MYclean.
Quality and efficiency are fundamental for MP Filtri:
this exclusive new filter element possesses polygon shape geometry and specific seal that ensures only original spare parts can be used - ensuring correct operation and higher system reliability.**

MPLX series

with MYCLEAN MLX Filter Element

- **Protects the machine from improper use of non-original products.**
- **Safety of constant quality protection & reliability**

With exclusive filter element you are sure that only MP Filtri filter elements can be used, ensuring the best cleaning level of the oil due to the use of originals filter elements.

The products identified as MPLX are protected by:

- Italian Patent n° 102014902261205
- Canadian Patent n° 2,937,258
- European Patent n° 3 124 092 B1
- US Patent n° 20170030384 A1

MPLX series

Maximum working pressure up to 1 MPa (10 bar) - Flow rate up to 1800 l/min

MPLX GENERAL INFORMATION

Description

Return filter

Maximum working pressure up to 1 MPa (10 bar)
Flow rate up to 1800 l/min

MPLX is a range of return filters for protection of the reservoir against the system contamination.
Completely interchangeable with Pall 8420 & 8520, they are directly fixed to the reservoir, in immersed or semi-immersed position.
The use of the diffuser is recommended, to place the filter output always immersed into the fluid to avoid aeration or foam generation into the reservoir.
The filter output must be always immersed into the fluid to avoid aeration or foam generation into the reservoir.

Available features:
- Flanged connections up to 3", for a maximum flow rate of 1800 l/min
- Fine filtration rating, to get a good cleanliness level into the reservoir
- Bypass valve, to relieve excessive pressure drop across the filter media
- 6 fixing holes for installation, to suit a variety of reservoir surfaces
- Diffuser, to reduce the risk of aeration, foaming and noise
- Filler plug, to fill cleaned fluid into the tank without an additional connection
- Visual, electrical and electronic differential clogging indicators
- MYclean interface connection for the filter element, to protect the product against non-original spare parts

Common applications:
- Heavy duty industrial equipment
- Heavy duty mobile equipment

Technical data

Filter housing materials
- Head: Anodized aluminium
- Cover: Anodized aluminium
- Bowl: Phosphatized steel
- Bypass valve: Steel

Bypass valve
- Opening pressure 450 kPa (4.5 bar) ±10%

Δp element type
- Microfiber filter elements: 10 bar
- Fluid flow through the filter element from OUT to IN.

Seals
- Standard NBR series A
- Optional FPM series V

Temperature
From -25 °C to +110 °C

Note
MPLX filters are provided for vertical mounting

Weights [kg] and volumes [dm³]

Filter series	Weights [kg]		Volumes [dm³]	
	Length	2	Length	2
MPLX 250		8.95		2.90
MPLX 660		20.20		11.00

FILTER ASSEMBLY SIZING
Flow rates [l/min]

Filter series	Length	Filter element design - N Series						
		A03	A06	A10	A16	A25	M25 M60 M90	P10 P25
MPLX 250	**2**	157	155	281	312	325	583	392
MPLX 660	**2**	376	384	820	925	1018	1732	1332

Maximum flow rate for a complete return filter with a pressure drop Δp = 0.5 bar.
The reference fluid has a kinematic viscosity of 30 mm^2/s (cSt) and a density of 0.86 kg/dm^3.
For different pressure drop or fluid viscosity we recommend to use our selection software available on www.mpfiltri.com.
You can also calculate the right size using the formulas present on the FILTER SIZING paragraph at the beginning of the full catalogue or at the beginning of the filter family brochure.
Please, contact our Sales Department for further additional information.

Hydraulic symbols

Filter series	Style 1 connection + Diff. indic.
MPLX 250	•
MPLX 660	•

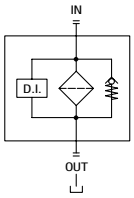

Pressure drop

Filter housings
Δp pressure drop

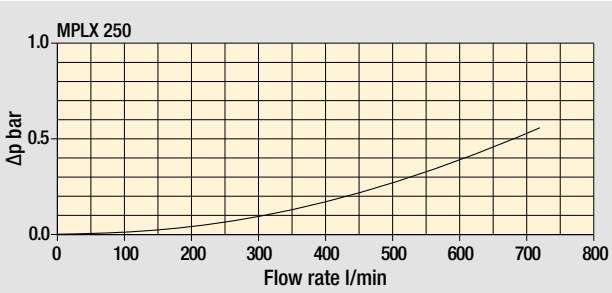

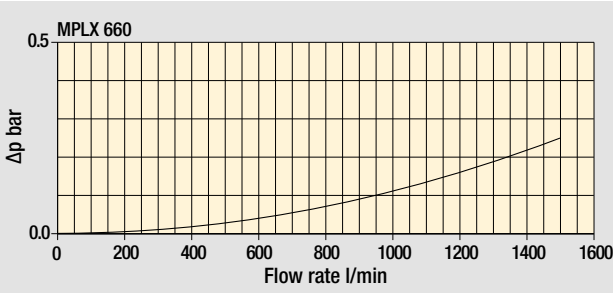

Bypass valve
pressure drop

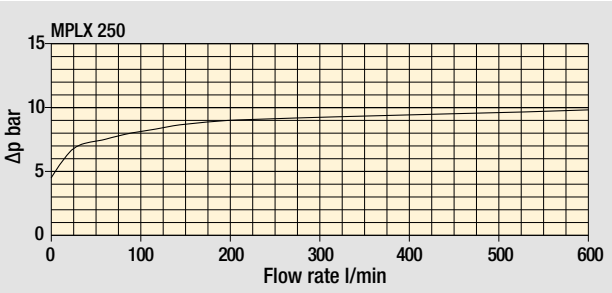

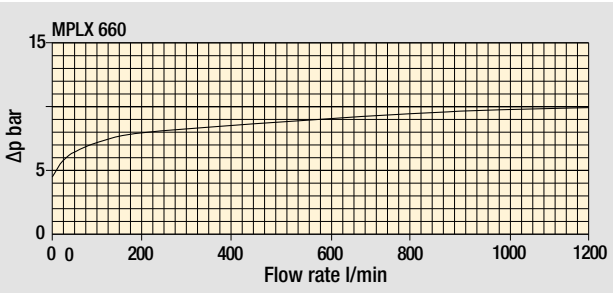

The curves are plotted using mineral oil with density of 0.86 kg/dm^3 in compliance with ISO 3968. Δp varies proportionally with density.

MPLX MPLX250 - MPLX660

Designation & Ordering code

COMPLETE FILTER

Configuration example 1:	MPLX250	2	D	S	V	A	6	M25	P01
Configuration example 2:	MPLX660	2	D	D	A	B	6	A10	P01

Series and size

MPLX250 | **MPLX660** Filter featuring MY CLEAN Filter Element

Length

2

By-pass valve

D 4.5 bar

Diffuser

S Without diffuser

D With standard diffuser

Seals and treatments

A NBR

V FPM

Connections	MPLX250	MPLX660
A	2” SAE 3000 psi/M	3” SAE 3000 psi/M
B	2” SAE 3000 psi/UNC	3” SAE 3000 psi/UNC

Connection for differential pressure indicator

6 With plugged connection

Filtration rating (filter media)

A03	Inorganic microfiber 3 µm	**M25**	Wire mesh 25 µm
A06	Inorganic microfiber 6 µm	**M60**	Wire mesh 60 µm
A10	Inorganic microfiber 10 µm	**M90**	Wire mesh 90 µm
A16	Inorganic microfiber 16 µm	**P10**	Resin impregnated paper 10 µm
A25	Inorganic microfiber 25 µm	**P25**	Resin impregnated paper 25 µm

Execution

P01 MP Filtri standard

Pxx Customized

FILTER ELEMENT

Configuration example 1:	MLX250	2	M25	V	P01
Configuration example 2:	MLX660	2	A10	A	P01

Element series and size

MLX250 | **MLX660** Filter Element with MY CLEAN feature

Element length

2

Filtration rating (filter media)

A03	Inorganic microfiber 3 µm	**M25**	Wire mesh 25 µm
A06	Inorganic microfiber 6 µm	**M60**	Wire mesh 60 µm
A10	Inorganic microfiber 10 µm	**M90**	Wire mesh 90 µm
A16	Inorganic microfiber 16 µm	**P10**	Resin impregnated paper 10 µm
A25	Inorganic microfiber 25 µm	**P25**	Resin impregnated paper 25 µm

Seals and treatments

A NBR

V FPM

Execution

P01 MP Filtri standard

Pxx Customized

CLOGGING INDICATORS

See page 710-711

DEA	Electrical differential pressure indicator	**DLE**	Electrical / visual differential pressure indicator
DEM	Electrical differential pressure indicator	**DTA**	Electronic differential pressure indicator
DEU	Electrical differential pressure indicator	**DVA**	Visual differential pressure indicator
DLA	Electrical / visual differential pressure indicator	**DVM**	Visual differential pressure indicator

PLUGS

See page 737

T2 Plug

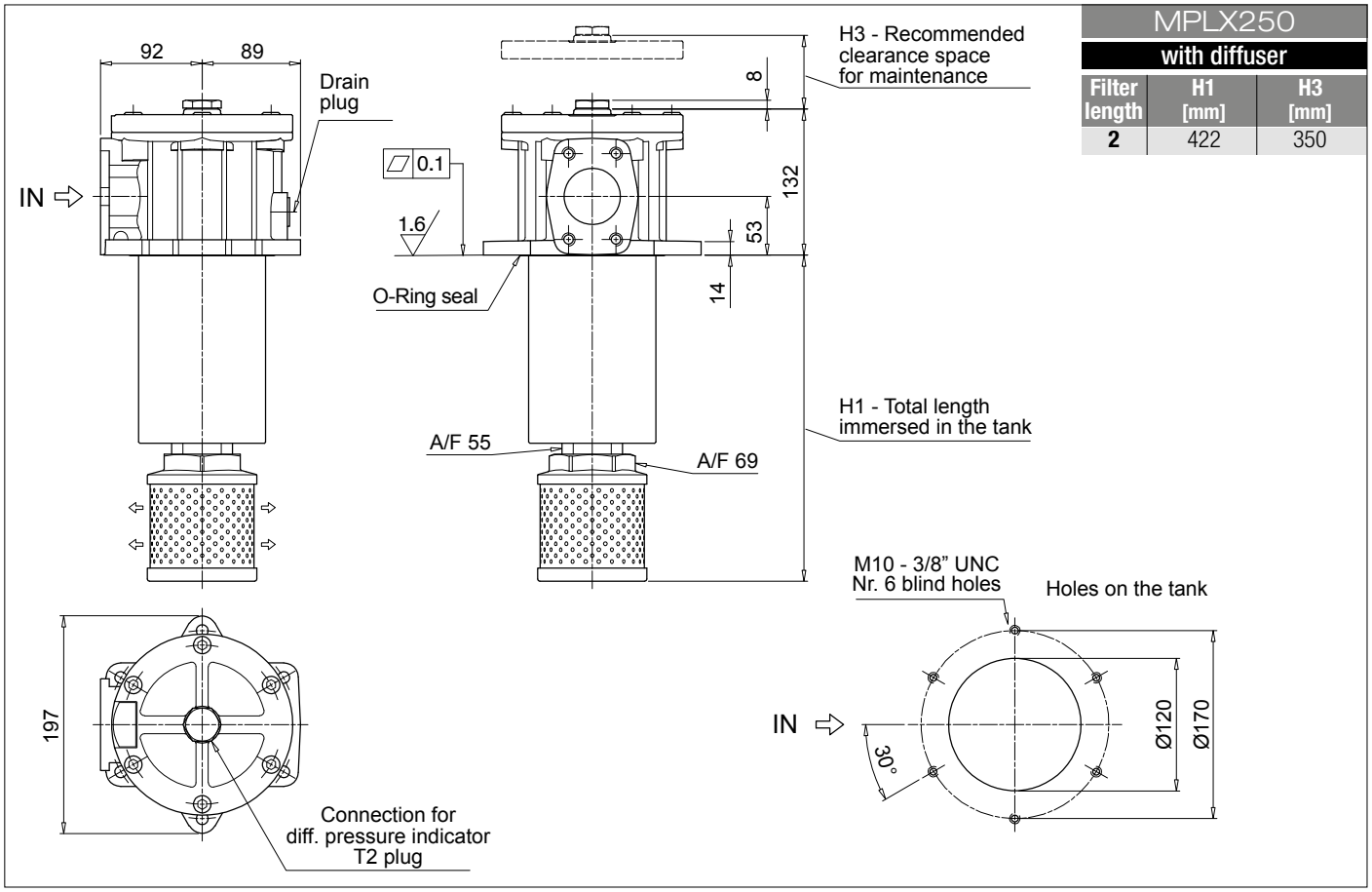

MPLX250 with diffuser		
Filter length	H1 [mm]	H3 [mm]
2	422	350

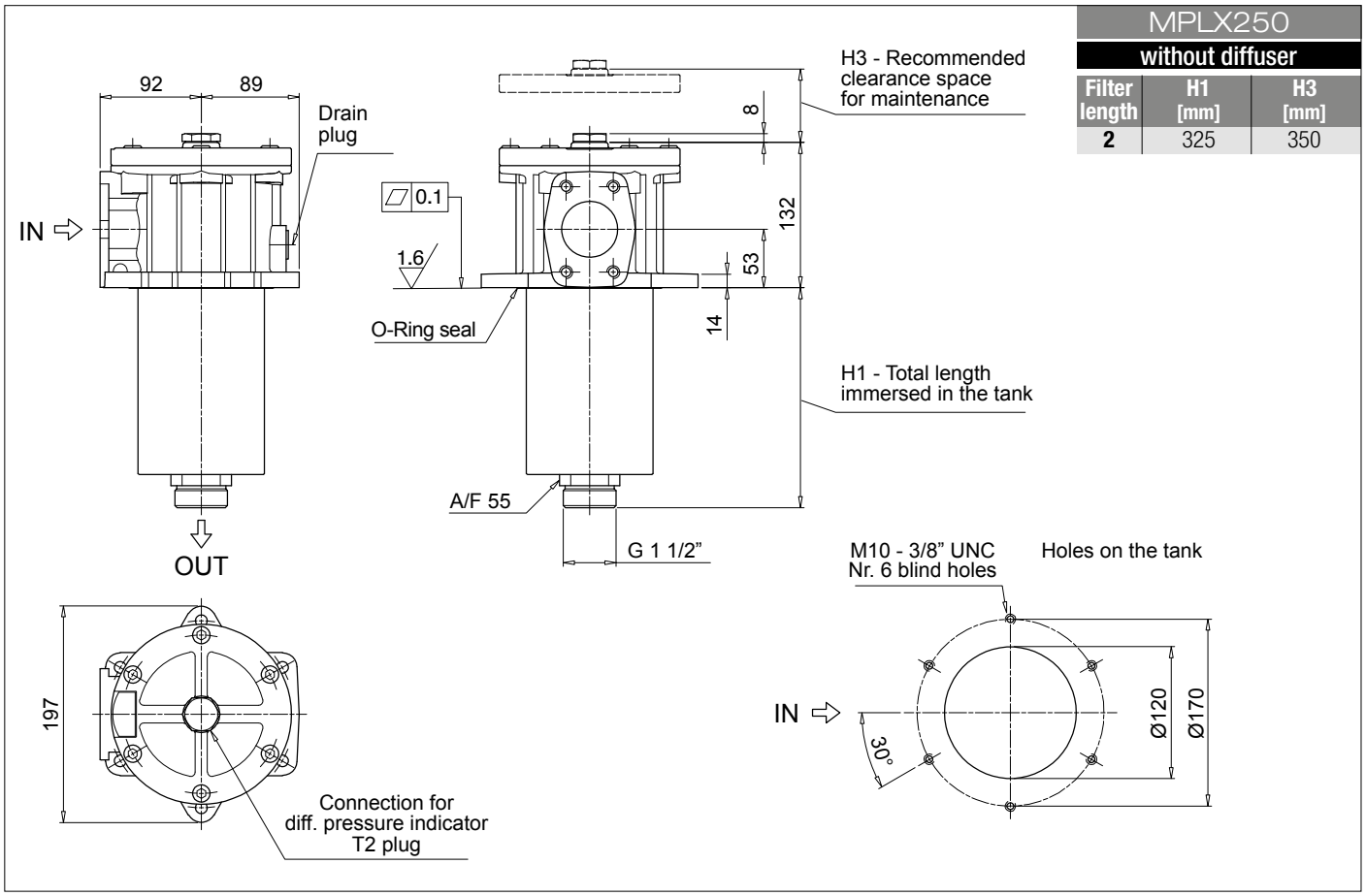

MPLX250 without diffuser		
Filter length	H1 [mm]	H3 [mm]
2	325	350

Dimensions

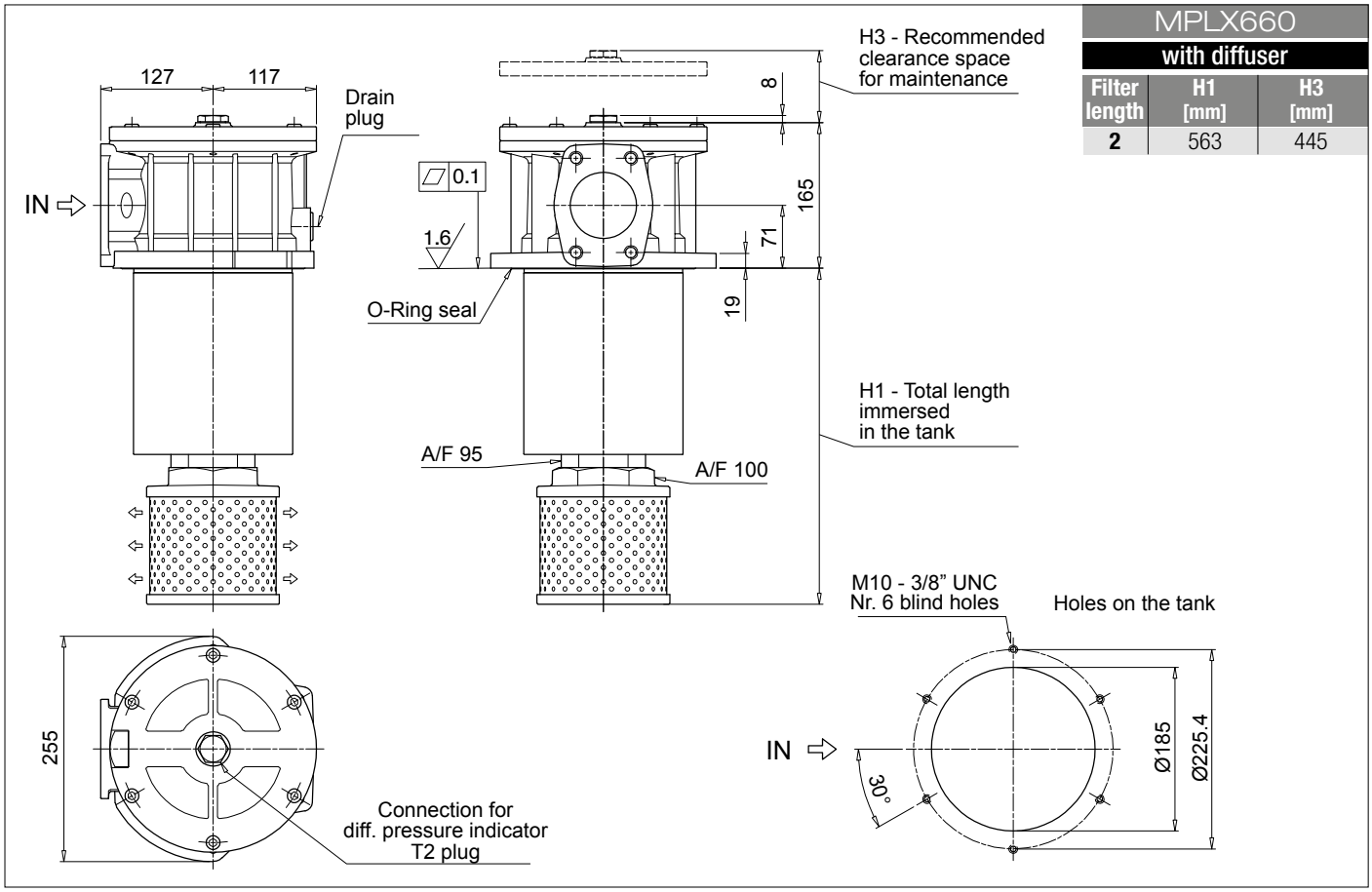

MPLX660 with diffuser		
Filter length	H1 [mm]	H3 [mm]
2	563	445

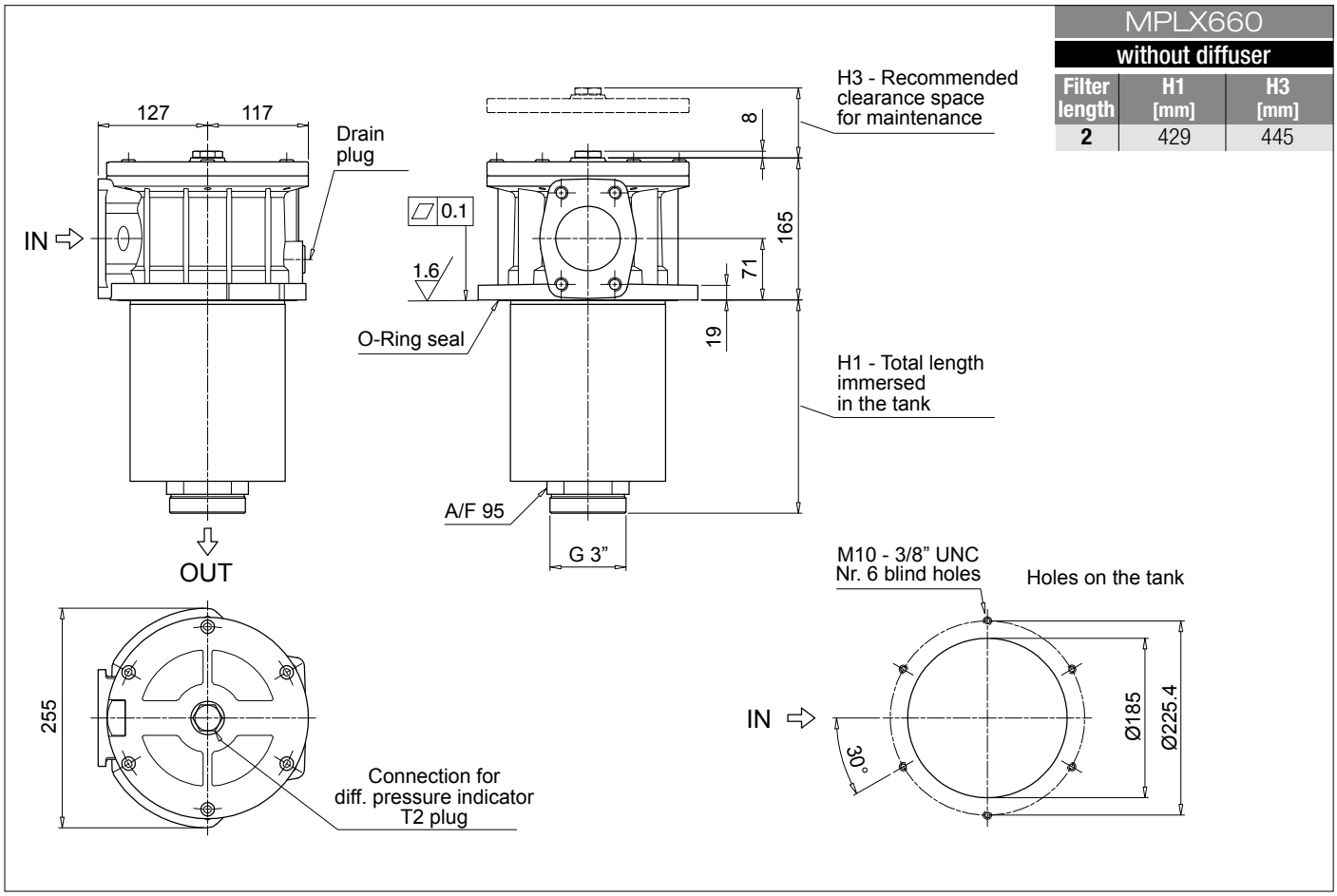

MPLX660 without diffuser		
Filter length	H1 [mm]	H3 [mm]
2	429	445

Order number for spare parts

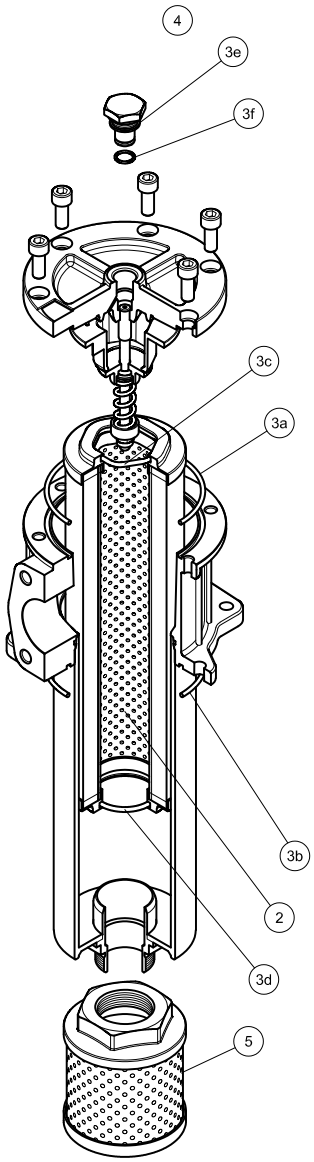

Item:	Q.ty: 1 pc. 2	Q.ty: 1 pc. 3 (3a ÷ 3f)		Q.ty: 1 pc. 4		Q.ty: 1 pc. 5
Filter series	**Filter element**	**Seal Kit code number NBR**	**FPM**	**Indicator connection plug NBR**	**FPM**	**Diffuser**
MPLX 250	See order table	02050745	02050746	T2H	T2V	STD 100 C 115 P01
MPLX 660		02050747	02050748			STD 150 E 155 P01

MYCLEAN

THE X CONCEPT FOR OUR FILTERS

Protect the performance of your system with MYclean.
Quality and efficiency are fundamental for MP Filtri:
this exclusive new filter element possesses polygon shape geometry and specific seal that ensures only original spare parts can be used - ensuring correct operation and higher system reliability.

MPTX series

with MYCLEAN MFX Filter Element

- **Protects the machine from improper use of non-original products.**
- **Safety of constant quality protection & reliability**

With exclusive filter element you are sure that only MP Filtri filter elements can be used, ensuring the best cleaning level of the oil due to the use of originals filter elements.

The products identified as MPTX are protected by:

- Italian Patent n° 102014902261205
- Canadian Patent n° 2,937,258
- European Patent n° 3 124 092 B1
- US Patent n° 20170030384 A1

TOGETHER WITH MYCLEAN, AS OPTION, MPTX SERIES CAN BE PROVIDED WITH

zerospark®

THE ANTI-STATIC FILTERS

THE Z CONCEPT FOR OUR FILTERS

Zerospark® is a specialist solution designed to solve the problem of electrostatic discharge inside hydraulic filters. Caused by the electrical charge build-up due to the passage of oil through the filters, this can result in damage to filter elements, oils and circuit components. It can even cause fire hazards in environments where flammable materials are present.

MPTX series

Maximum working pressure up to 800 kPa (8 bar) - Flow rate up to 300 l/min

MPTX GENERAL INFORMATION

Description

Return filter

Maximum working pressure up to 800 kPa (8 bar)
Flow rate up to 300 l/min

MPTX is a range of return filters with integrated breather filter, for protection of the reservoir against the system contamination.
They are directly fixed to the reservoir, in immersed or semi-immersed position.
The filter output must be always immersed into the fluid to avoid aeration or foam generation into the reservoir.

Available features:
- Female threaded connections up to 1 1/4", for a maximum flow rate of 300 l/min
- Multiple connections, to connect several return lines or drains
- Fine filtration rating, to get a good cleanliness level into the reservoir
- Bypass valve integrated into the filter element, to relieve excessive pressure drop across the filter media
- 2, 3 or 6 fixing holes for installation, to suit a variety of reservoir surfaces
- O-ring or Flat Seal to suit a variety of reservoir surfaces
- Screw-in cover with a special shape, to allow the filter element replacement without the use of specific tools
- Oil dipstick, to easily check the level of the fluid into the reservoir (sold as separate item)
- Extension tube, to be used in deep reservoirs (sold as separate item)
- Diffuser, to reduce the risk of aeration, foaming and noise (sold as separate item)
- Integrated breather filter, to clean the air that moves into the reservoir as result of the oil level fluctuation
- Integrated breather filter with pressurization valve, to clean the air that moves into the reservoir as result of the oil level fluctuation and to guarantee the pressurization into the reservoir
- Visual, electrical and electronic clogging indicators
- MYclean interface connection, to protect the product against non-original spare parts
- External protective wrap, to optimize the flow through the element and to save the element efficiency against non-proper handling

Common applications:
- Light industrial equipment
- Mobile application

Technical data

Filter housing materials
- Head: Aluminium
- Cover: Polyamide
- Bowl: Polyamide

Bypass valve
- Opening pressure 175 kPa (1.75 bar) ±10%
- Opening pressure 300 kPa (3 bar) ±10%

Δp element type
- Microfiber filter elements - series H: 10 bar
- Fluid flow through the filter element from OUT to IN

Seals
- Standard NBR series A
- Optional FPM series V

Temperature
From -25 °C to +110 °C

Note
MPTX filters are provided for vertical mounting

Weights [kg] and volumes [dm³]

Filter series	Weights [kg]					Volumes [dm³]				
	Length	1	2	3	4	Length	1	2	3	4
MPTX 025		0.41	0.45	0.50	-		0.24	0.35	0.42	-
MPTX 027		0.44	0.48	0.55	-		0.24	0.35	0.42	-
MPTX 110		1.00	1.05	1.15	1.40		0.72	0.93	1.28	1.74
MPTX 114		1.10	1.15	1.25	1.50		0.72	0.93	1.28	1.74
MPTX 116		1.10	1.15	1.25	1.50		0.72	0.93	1.28	1.74
MPTX 120		1.00	1.05	1.15	1.40		0.72	0.93	1.28	1.74

FILTER ASSEMBLY SIZING
Flow rates [l/min]

Filter series	Length	Filter element design - H series					Filter element design - N series		
		A03	A06	A10	A16	A25	M25 M60 M90	P10	P25
MPTX 025-027	**1**	7	10	23	28	42	59	51	54
	2	17	20	45	48	56	72	64	67
	3	21	24	50	55	59	76	74	75
MPTX 110-120 114-116	**1**	18	20	53	56	65	153	87	96
	2	28	38	65	75	95	158	111	123
	3	48	55	125	135	169	289	224	251
	4	79	89	180	185	198	306	264	289

Maximum flow rate for a complete return filter with a pressure drop Δp = 0.5 bar.
The reference fluid has a kinematic viscosity of 30 mm^2/s (cSt) and a density of 0.86 kg/dm^3.
For different pressure drop or fluid viscosity we recommend to use our selection software available on www.mpfiltri.com.
You can also calculate the right size using the formulas present on the FILTER SIZING paragraph at the beginning of the full catalogue or at the beginning of the filter family brochure.
Please, contact our Sales Department for further additional information.

Hydraulic symbols

Filter series	Style 1 connection	Style 2 connections	Style 3 connections
MPTX 025	•	-	-
MPTX 027	•	-	-
MPTX 110	-	•	-
MPTX 114	•	-	-
MPTX 116	•	-	-
MPTX 120	-	-	•

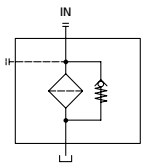

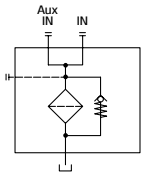

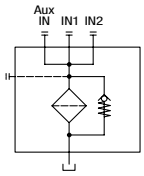

Pressure drop

Filter housings Δp pressure drop

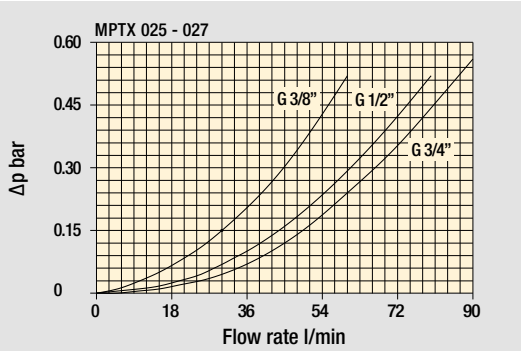

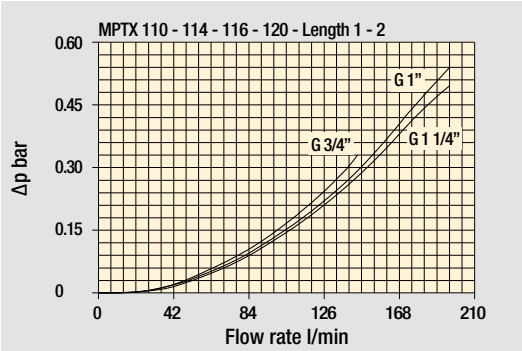

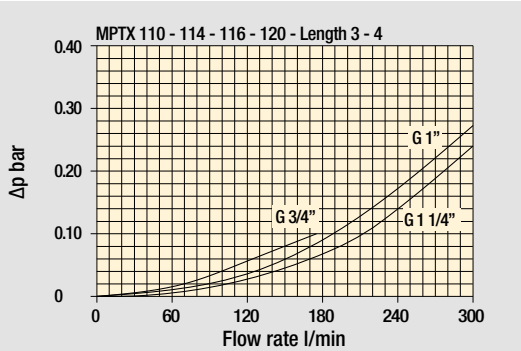

Bypass valve pressure drop

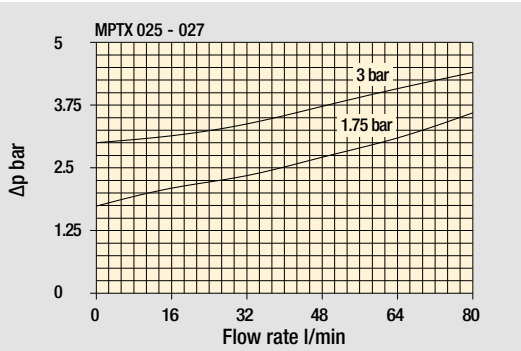

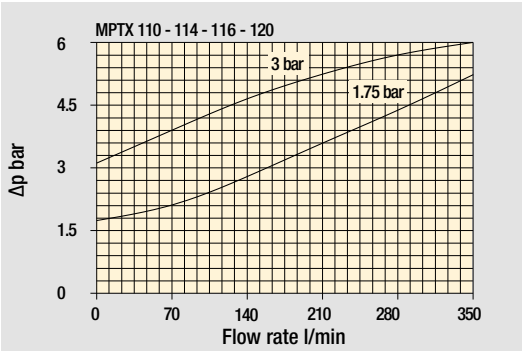

Air breather pressure drop

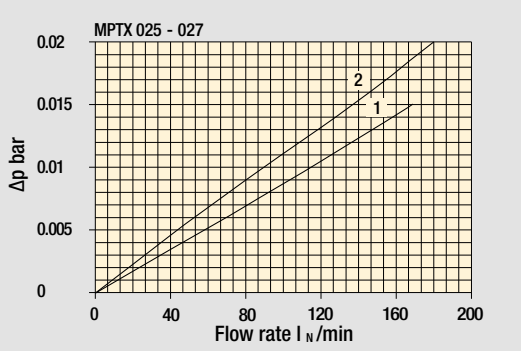

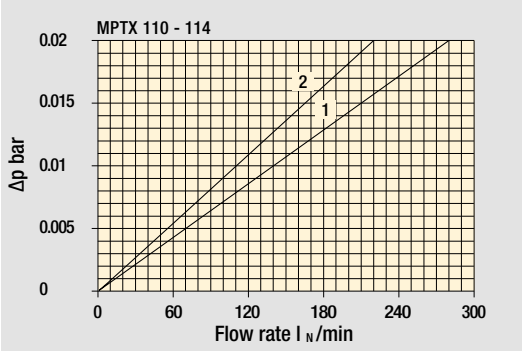

1 C With air breather 10 µm

2 D With anti-splash and SAP50 10 µm

The curves are plotted using mineral oil with density of 0.86 kg/dm³ in compliance with ISO 3968. Δp varies proportionally with density.

Multifunction

MPTX 025 -027		
Air breather port plugged Indicator port	Air breather standard Indicator port	Anti-splash air breather & pressurized Double indicator port

Multiport - Multifunction

MPTX 110	
Standard - Single IN Port	Double IN Port - Double indicator port
Double IN Port **Option:** double drain port	Double IN Port - Indicator port **Option:** drain port

MPTX 120
Triple IN port **Option:** double drain port

MPTX MPTX025 - MPTX027

Designation & Ordering code

COMPLETE FILTER

Configuration example 1:	MPTX025	1	S	A	G3	A10	E	P01
Configuration example 2:	MPTX027	3	C	W	G6	A03	B	P01

Series and size

MPTX025 | **MPTX027** Filter featuring MYCLEAN Filter Element

Length

1 | **2** | **3** |

Air breather

S	Without air breather
C	With air breather 10 µm
D	With anti-splash and air breather SAP050 10 µm
P	With anti-splash and air breather SAP050 10 µm, pressurization 0.5 bar

Seals and treatments		Filtration rating Axx	Mxx	Pxx
A	NBR	•	•	•
V	FPM	•	•	•
W	NBR head anodized	•	•	-
Z	FPM head anodized	•	•	-

Connections

G1	G 3/8”	**G6**	3/4” NPT
G2	G 1/2”	**G7**	SAE 6 - 9/16” - 18 UNF
G3	G 3/4”	**G8**	SAE 8 - 3/4” - 16 UNF
G4	3/8” NPT	**G9**	SAE 12 - 1 1/16” - 12 UN
G5	1/2” NPT		

Filtration rating (filter media)

A03	Inorganic microfiber 3 µm	**M25**	Wire mesh 25 µm
A06	Inorganic microfiber 6 µm	**M60**	Wire mesh 60 µm
A10	Inorganic microfiber 10 µm	**M90**	Wire mesh 90 µm
A16	Inorganic microfiber 16 µm	**P10**	Resin impregnated paper 10 µm
A25	Inorganic microfiber 25 µm	**P25**	Resin impregnated paper 25 µm

Bypass valve

E	3 bar
B	1.75 bar

Executions

Base	zerospark	
P01	**Z01**	MP Filtri standard
Pxx	**Zxx**	Customized

FILTER ELEMENT

Configuration example 2:	MFX020	1	A10	H	B	E	P01
Configuration example 1:	MFX020	3	A03	N	B		P01

Element series and size

MFX020 Filter Element with MYCLEAN feature

Element length

1 | **2** | **3** |

Filtration rating (filter media)

A03	Inorganic microfiber 3 µm	**M25**	Wire mesh 25 µm
A06	Inorganic microfiber 6 µm	**M60**	Wire mesh 60 µm
A10	Inorganic microfiber 10 µm	**M90**	Wire mesh 90 µm
A16	Inorganic microfiber 16 µm	**P10**	Resin impregnated paper 10 µm
A25	Inorganic microfiber 25 µm	**P25**	Resin impregnated paper 25 µm

Element Δp		Filter media Axx	Mxx	Pxx
N	10 bar	-	•	•
H	10 bar	•	-	-

Seals

B	NBR
V	FPM

Bypass valve

E	3 bar
-	1.75 bar

Executions

Base	zerospark	
P01	**Z01**	MP Filtri standard
Pxx	**Zxx**	Customized

CLOGGING INDICATORS

See page 710-711

BVA	Axial pressure gauge
BVR	Radial pressure gauge
BVP	Visual pressure indicator with automatic reset
BVQ	Visual pressure indicator with manual reset
BEA	Electrical pressure indicator
BEM	Electrical pressure indicator
BLA	Electrical / visual pressure indicator

ADDITIONAL FEATURES

See page 266

TE	Extension tube
DPT	Dipstick

Dimensions

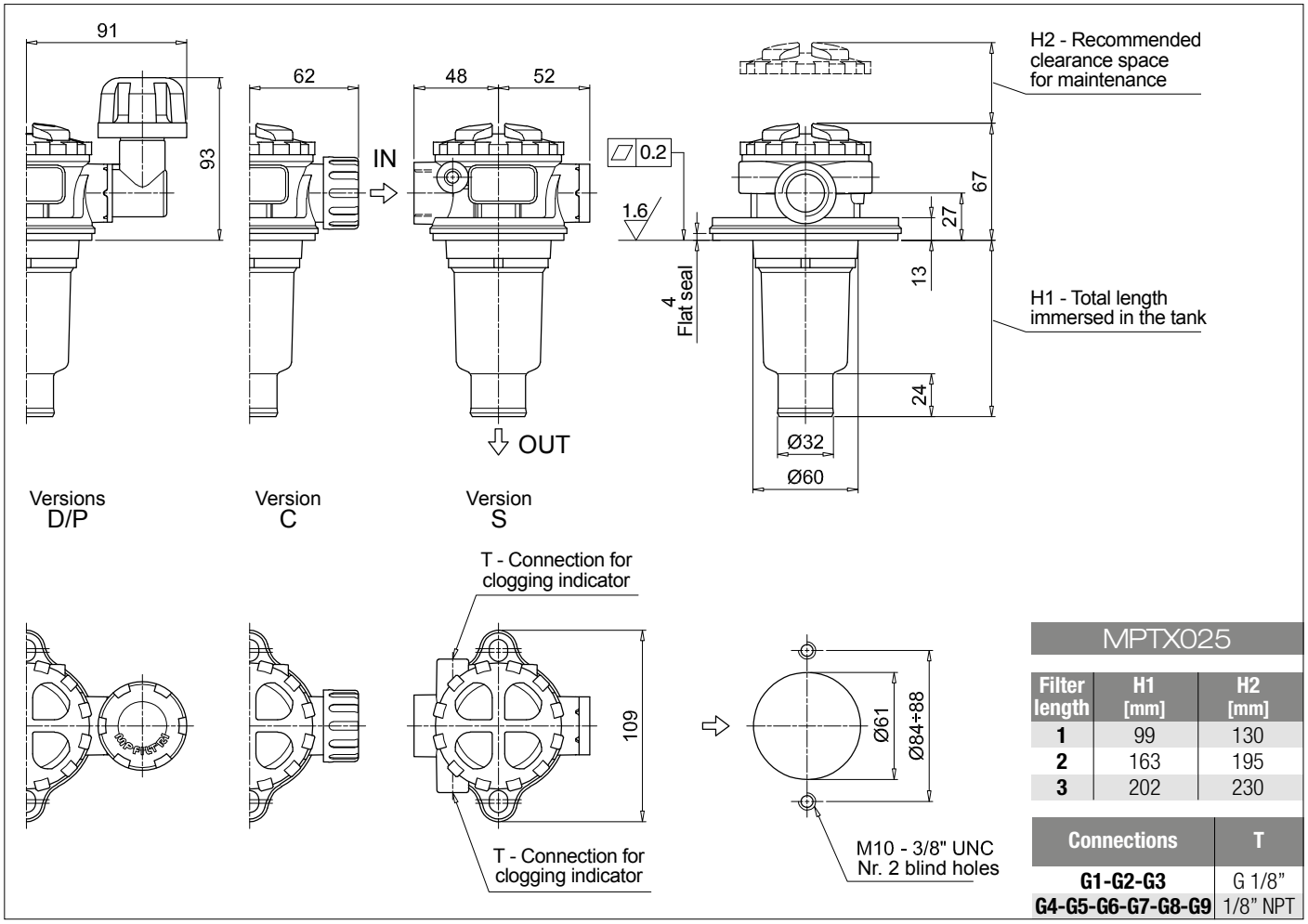

MPTX025		
Filter length	**H1 [mm]**	**H2 [mm]**
1	99	130
2	163	195
3	202	230

Connections	T
G1-G2-G3	G 1/8”
G4-G5-G6-G7-G8-G9	1/8” NPT

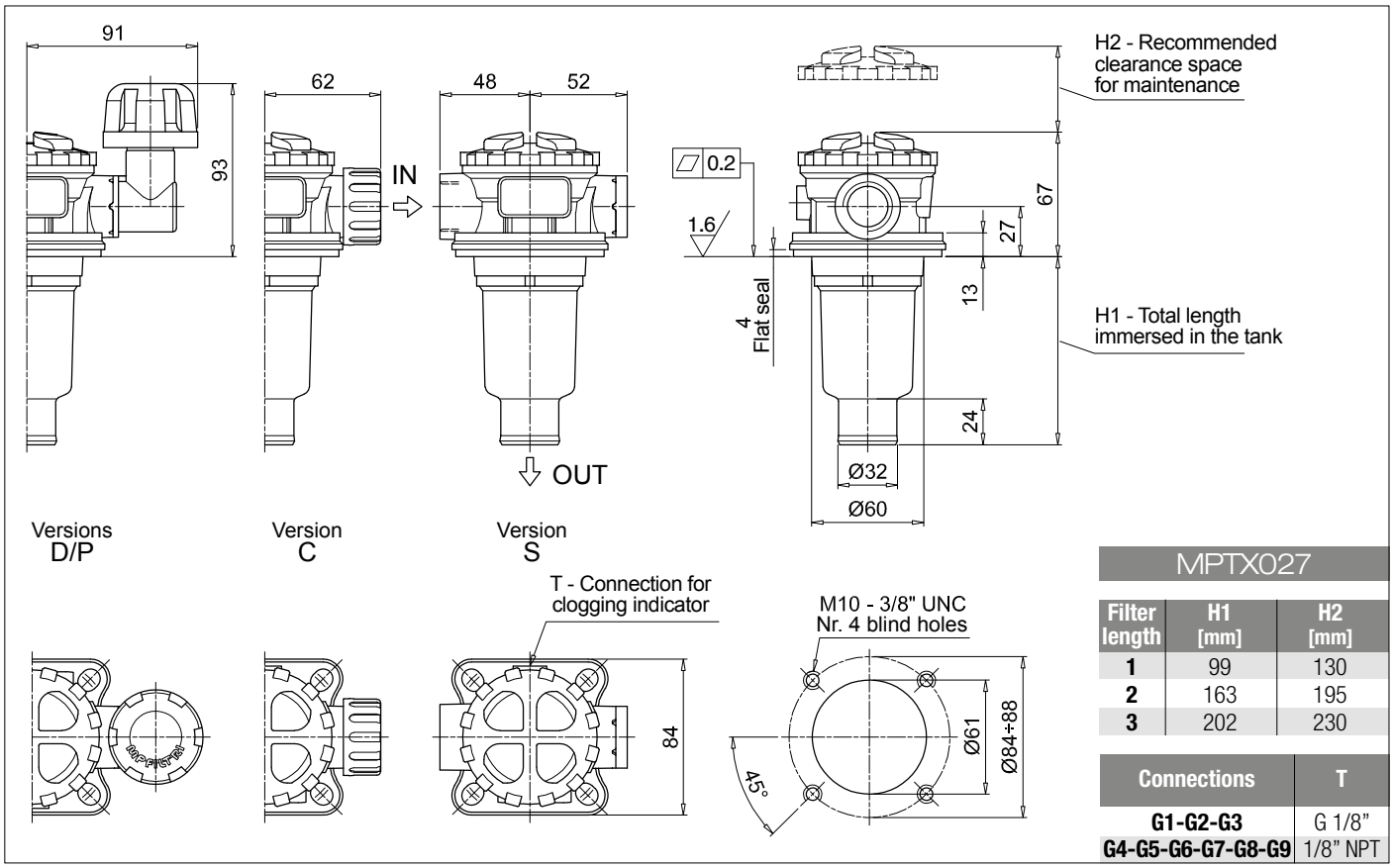

MPTX027		
Filter length	**H1 [mm]**	**H2 [mm]**
1	99	130
2	163	195
3	202	230

Connections	T
G1-G2-G3	G 1/8”
G4-G5-G6-G7-G8-G9	1/8” NPT

MPTX MPTX110

Designation & Ordering code

COMPLETE FILTER

Configuration example 1:	MPTX110	1	S	A	G1	0	A06	E	P01
Configuration example 2:	MPTX110	3	P	V	G4	1	M25	B	P01

Series and size

MPTX110 Filter featuring MY CLEAN Filter Element

Length

1 | **2** | **3** | **4** |

Air breather

S	Without air breather
C	With air breather 10 µm
D	With anti-splash and air breather SAP050 10 µm
P	With anti-splash and air breather SAP050 10 µm, pressurization 0.5 bar

Seals and treatments

		Filtration rating Axx	Mxx	Pxx
A	NBR	•	•	•
V	FPM	•	•	•
W	NBR head anodized	•	•	-
Z	FPM head anodized	•	•	-

Main Connections		Aux size 1	Aux size 2
G1	G 3/4"	G 3/8"	G 1/2"
G2	G 1"		
G3	G 1 1/4"		
G4	3/4" NPT	3/8" NPT	1/2" NPT
G5	1" NPT		

Main Connections		Aux size 1	Aux size 2
G6	1 1/4" NPT	3/8" NPT	1/2" NPT
G7	SAE 12 - 1 1/16" - 12 UN	SAE 6 - 9/16" - 18 UNF	SAE 8 - 3/4" - 16 UNF
G8	SAE 16 - 1 5/16" - 12 UN		
G9	SAE 20 - 1 5/8" - 12 UN		

Aux connection - see previous table

0	Not machined	**1**	Aux size 1	**2**	Aux size 2

Filtration rating (filter media)

A03	Inorganic microfiber 3 µm	**M25**	Wire mesh 25 µm
A06	Inorganic microfiber 6 µm	**M60**	Wire mesh 60 µm
A10	Inorganic microfiber 10 µm	**M90**	Wire mesh 90 µm
A16	Inorganic microfiber 16 µm	**P10**	Resin impregnated paper 10 µm
A25	Inorganic microfiber 25 µm	**P25**	Resin impregnated paper 25 µm

Bypass valve

E	3 bar
B	1.75 bar

Executions

Base	zerospark	
P01	**Z01**	MP Filtri standard
Pxx	**Zxx**	Customized

FILTER ELEMENT

Configuration example 1:	MFX100	1	A06	H	B	E	P01
Configuration example 2:	MFX100	3	M25	N	V		P01

Element series and size

MFX100 Filter Element with MY CLEAN feature

Element length

1 | **2** | **3** | **4** |

Filtration rating (filter media)

A03	Inorganic microfiber 3 µm	**M25**	Wire mesh 25 µm
A06	Inorganic microfiber 6 µm	**M60**	Wire mesh 60 µm
A10	Inorganic microfiber 10 µm	**M90**	Wire mesh 90 µm
A16	Inorganic microfiber 16 µm	**P10**	Resin impregnated paper 10 µm
A25	Inorganic microfiber 25 µm	**P25**	Resin impregnated paper 25 µm

Element Δp

		Filter media Axx	Mxx	Pxx
N	10 bar	-	•	•
H	10 bar	•	-	-

Seals

B	NBR
V	FPM

Bypass valve

E	3 bar
-	1.75 bar

Executions

Base	zerospark	
P01	**Z01**	MP Filtri standard
Pxx	**Zxx**	Customized

CLOGGING INDICATORS

See page 710-711

BVA	Axial pressure gauge	**BEA**	Electrical pressure indicator
BVR	Radial pressure gauge	**BEM**	Electrical pressure indicator
BVP	Visual pressure indicator with automatic reset	**BLA**	Electrical / visual pressure indicator
BVQ	Visual pressure indicator with manual reset		

ADDITIONAL FEATURES

See page 266

TE	Extension tube	**DPT**	Dipstick
DFS	Diffuser with fast lock connection		

MPTX110		
Filter length	**H1 [mm]**	**H2 [mm]**
1	99	120
2	144	170
3	222	250
4	324	350

Connections	T
G1-G2-G3	G 1/8”
G4-G5-G6-G7-G8-G9	1/8” NPT

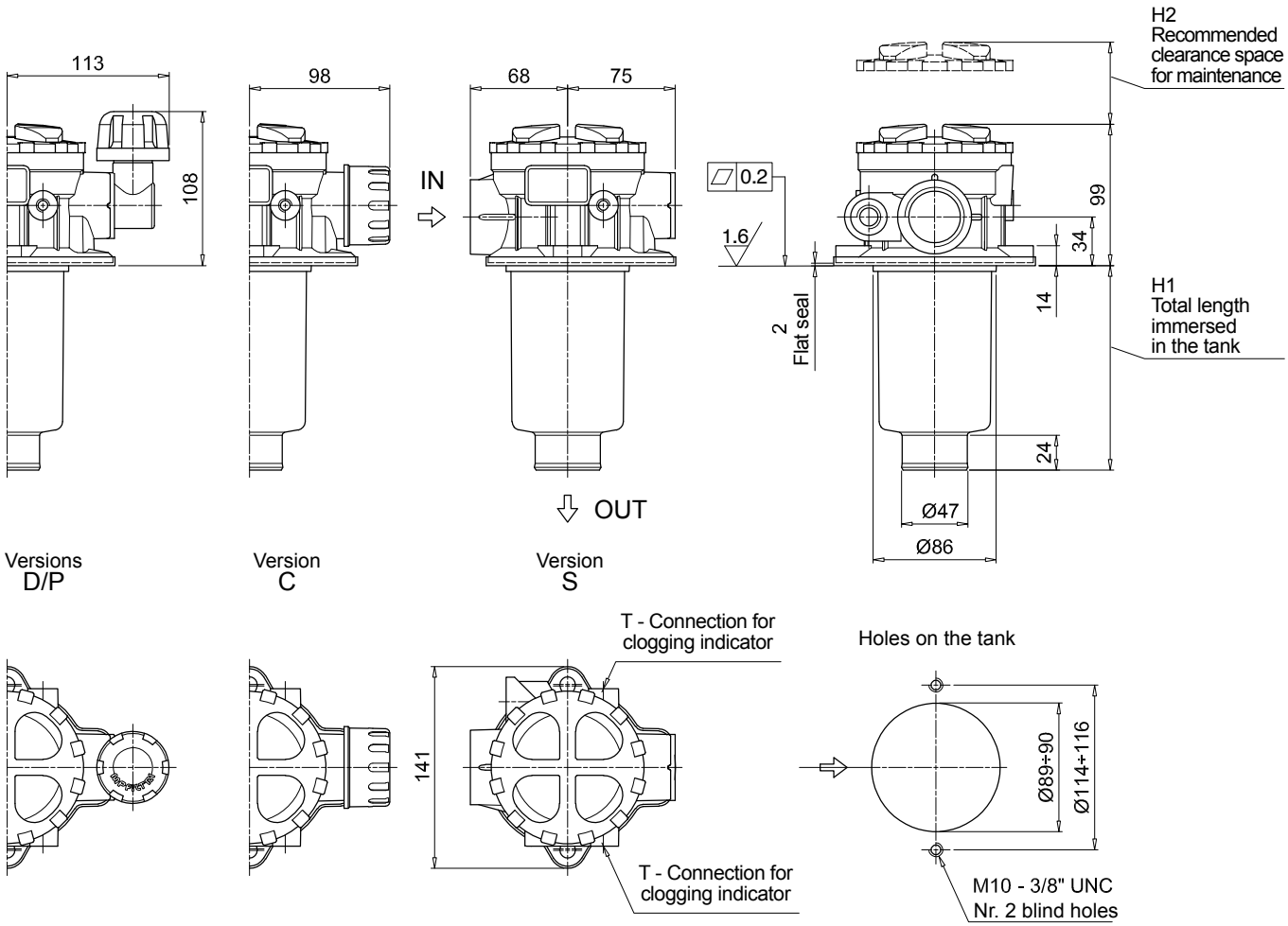

MPTX MPTX114

Designation & Ordering code

COMPLETE FILTER

Configuration example 1:	MPTX114	4	S	A	G3	A10	E	P01
Configuration example 2:	MPTX114	3	C	W	G6	A03	B	P01

Series and size

MPTX114 Filter featuring MY CLEAN Filter Element

Length

1 | **2** | **3** | **4** |

Air breather

S	Without air breather
C	With air breather 10 µm
D	With anti-splash and air breather SAP050 10 µm
P	With anti-splash and air breather SAP050 10 µm pressurization 0.5 bar

Seals and treatments		Filtration rating Axx	Mxx	Pxx
A	NBR	•	•	•
V	FPM	•	•	•
W	NBR head anodized	•	•	-
Z	FPM head anodized	•	•	-

Connections

G1	G 3/4”	**G6**	1 1/4” NPT
G2	G 1”	**G7**	SAE 12 - 1 1/16” - 12 UN
G3	G 1 1/4”	**G8**	SAE 16 - 1 5/16” - 12 UN
G4	3/4” NPT	**G9**	SAE 20 - 1 5/8” - 12 UN
G5	1” NPT		

Filtration rating (filter media)

A03	Inorganic microfiber 3 µm	**M25**	Wire mesh 25 µm
A06	Inorganic microfiber 6 µm	**M60**	Wire mesh 60 µm
A10	Inorganic microfiber 10 µm	**M90**	Wire mesh 90 µm
A16	Inorganic microfiber 16 µm	**P10**	Resin impregnated paper 10 µm
A25	Inorganic microfiber 25 µm	**P25**	Resin impregnated paper 25 µm

Bypass valve

E	3 bar
B	1.75 bar

Executions

Base	zerospark	
P01	**Z01**	MP Filtri standard
Pxx	**Zxx**	Customized

FILTER ELEMENT

Configuration example 2:	MFX100	4	A10	H	B	E	P01
Configuration example 1:	MFX100	3	A03	N	B		P01

Element series and size

MFX100 Filter Element with MY CLEAN feature

Element length

1 | **2** | **3** | **4** |

Filtration rating (filter media)

A03	Inorganic microfiber 3 µm	**M25**	Wire mesh 25 µm
A06	Inorganic microfiber 6 µm	**M60**	Wire mesh 60 µm
A10	Inorganic microfiber 10 µm	**M90**	Wire mesh 90 µm
A16	Inorganic microfiber 16 µm	**P10**	Resin impregnated paper 10 µm
A25	Inorganic microfiber 25 µm	**P25**	Resin impregnated paper 25 µm

Element Δp		Filter media Axx	Mxx	Pxx
N	10 bar	-	•	•
H	10 bar	•	-	-

Seals

B	NBR
V	FPM

Bypass valve

E	3 bar
-	1.75 bar

Executions

Base	zerospark	
P01	**Z01**	MP Filtri standard
Pxx	**Zxx**	Customized

CLOGGING INDICATORS

See page 710-711

BVA	Axial pressure gauge
BVR	Radial pressure gauge
BVP	Visual pressure indicator with automatic reset
BVQ	Visual pressure indicator with manual reset
BEA	Electrical pressure indicator
BEM	Electrical pressure indicator
BLA	Electrical / visual pressure indicator

ADDITIONAL FEATURES

See page 266

TE	Extension tube
DFS	Diffuser with fast lock connection
DPT	Dipstick

MPTX114		
Filter length	**H1 [mm]**	**H2 [mm]**
1	99	120
2	144	170
3	222	250
4	324	350

Connections	T
G1-G2-G3	G 1/8”
G4-G5-G6-G7-G8-G9	1/8” NPT

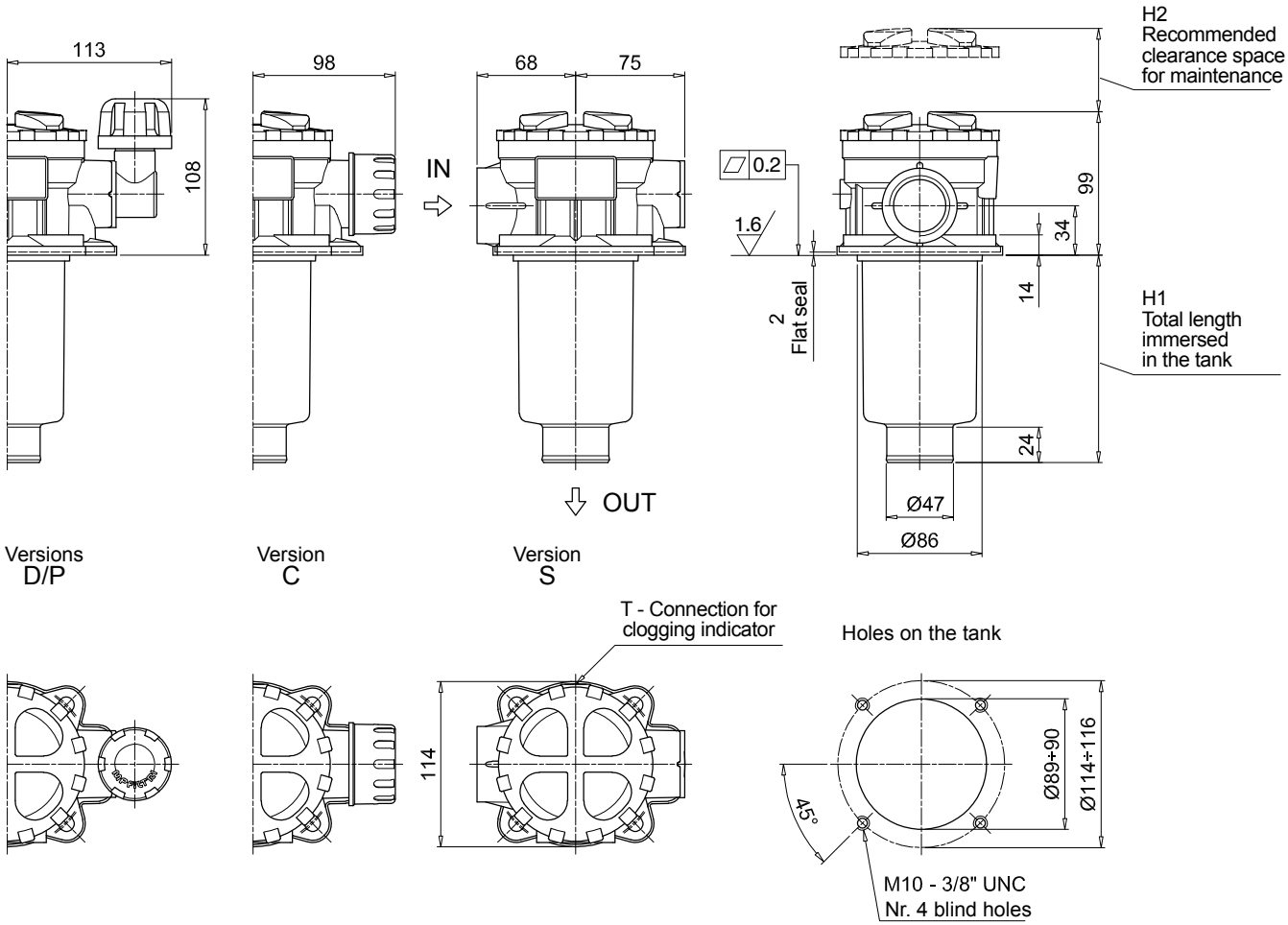

MPTX MPTX116

Designation & Ordering code

COMPLETE FILTER

Configuration example 1:	MPTX116	1	S	A	G1	M90	E	P01
Configuration example 2:	MPTX116	2	S	Z	G9	A03	B	P01

Series and size

MPTX116 Filter featuring MYCLEAN Filter Element

Length

1 | **2** | **3** | **4** |

Air breather

S Without air breather

Seals and treatments

		Filtration rating Axx	Mxx	Pxx
A	NBR	•	•	•
V	FPM	•	•	•
W	NBR head anodized	•	•	-
Z	FPM head anodized	•	•	-

Flat seal on the head on request

Connections

G1	G 3/4”	**G6**	1 1/4” NPT
G2	G 1”	**G7**	SAE 12 - 1 1/16” - 12 UN
G3	G 1 1/4”	**G8**	SAE 16 - 1 5/16” - 12 UN
G4	3/4” NPT	**G9**	SAE 20 - 1 5/8” - 12 UN
G5	1” NPT		

Filtration rating (filter media)

A03	Inorganic microfiber 3 µm	**M25**	Wire mesh 25 µm
A06	Inorganic microfiber 6 µm	**M60**	Wire mesh 60 µm
A10	Inorganic microfiber 10 µm	**M90**	Wire mesh 90 µm
A16	Inorganic microfiber 16 µm	**P10**	Resin impregnated paper 10 µm
A25	Inorganic microfiber 25 µm	**P25**	Resin impregnated paper 25 µm

Bypass valve

E	3 bar
B	1.75 bar

Executions

Base	zerospark	
P01	**Z01**	MP Filtri standard
Pxx	**Zxx**	Customized

FILTER ELEMENT

Configuration example 2:	MFX100	1	M90	N	B	E	P01
Configuration example 1:	MFX100	2	A03	H	V		P01

Element series and size

MFX100 Filter Element with MYCLEAN feature

Element length

1 | **2** | **3** | **4** |

Filtration rating (filter media)

A03	Inorganic microfiber 3 µm	**M25**	Wire mesh 25 µm
A06	Inorganic microfiber 6 µm	**M60**	Wire mesh 60 µm
A10	Inorganic microfiber 10 µm	**M90**	Wire mesh 90 µm
A16	Inorganic microfiber 16 µm	**P10**	Resin impregnated paper 10 µm
A25	Inorganic microfiber 25 µm	**P25**	Resin impregnated paper 25 µm

Element Δp

		Filter media Axx	Mxx	Pxx
N	10 bar	-	•	•
H	10 bar	•	-	-

Seals

B	NBR
V	FPM

Bypass valve

E	3 bar
-	1.75 bar

Executions

Base	zerospark	
P01	**Z01**	MP Filtri standard
Pxx	**Zxx**	Customized

CLOGGING INDICATORS

See page 710-711

BVA	Axial pressure gauge	**BEA**	Electrical pressure indicator
BVR	Radial pressure gauge	**BEM**	Electrical pressure indicator
BVP	Visual pressure indicator with automatic reset	**BLA**	Electrical / visual pressure indicator
BVQ	Visual pressure indicator with manual reset		

ADDITIONAL FEATURES

See page 266

TE	Extension tube	**DPT**	Dipstick
DFS	Diffuser with fast lock connection		

MPTX116		
Filter length	**H1 [mm]**	**H2 [mm]**
1	99	120
2	146	170
3	224	250
4	326	350

Connections	T
G1-G2-G3	G 1/8”
G4-G5-G6-G7-G8-G9	1/8” NPT

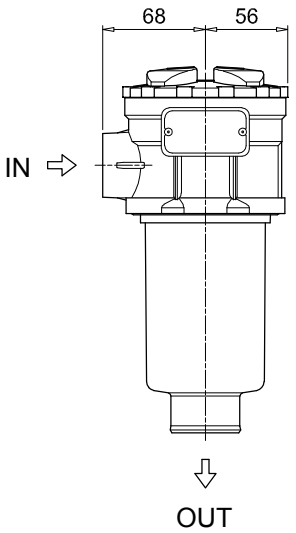

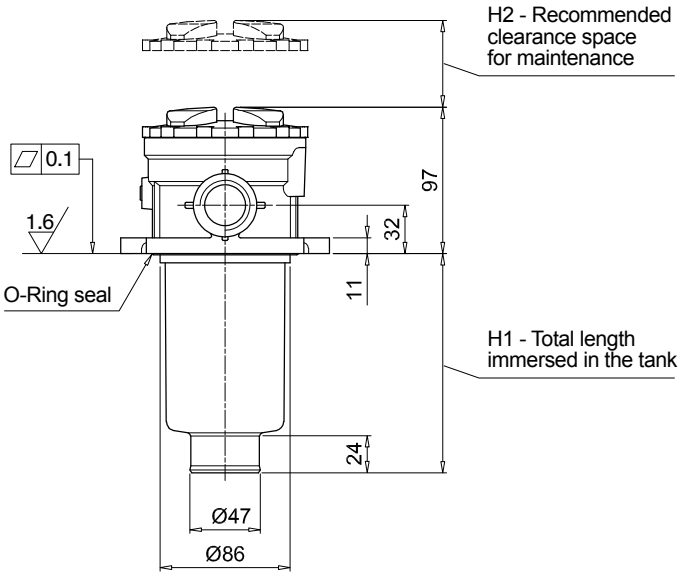

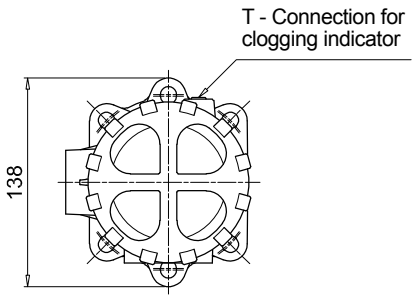

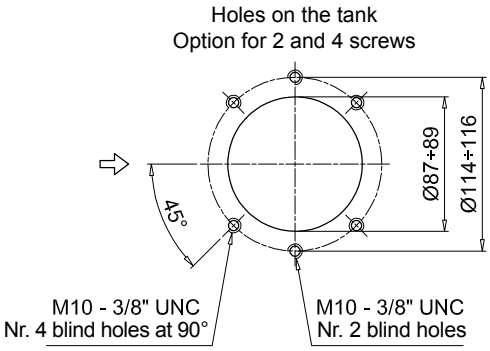

MPTX MPTX120

Designation & Ordering code

COMPLETE FILTER

Configuration example 1:	MPTX120	1	A	G1	0	A06	E	P01
Configuration example 2:	MPTX120	3	V	G4	1	M25	B	P01

Series and size

MPTX120 Filter featuring MYCLEAN Filter Element

Length

1 | **2** | **3** | **4** |

Seals and treatments		Filtration rating Axx	Mxx	Pxx
A	NBR	•	•	•
V	FPM	•	•	•
W	NBR head anodized	•	•	-
Z	FPM head anodized	•	•	-

Main Connections		Rear connections	Aux size 1	Aux size 2
G1	G 3/4”	G 3/4”	G 3/8”	G 1/2”
G2	G 1”	G 1”		
G3	G 1 1/4”	G 3/4”		
G4	3/4” NPT	3/4” NPT	3/8” NPT	1/2” NPT
G5	1” NPT	1” NPT		
G6	1 1/4” NPT	3/4” NPT		
G7	SAE 12 - 1 1/16” - 12 UN	SAE 12 - 1 1/16” - 12 UN	SAE 6 - 9/16” - 18 UNF	SAE 8 - 3/4” - 16 UNF
G8	SAE 16 - 1 5/16” - 12 UN	SAE 16 - 1 5/16” - 12 UN		
G9	SAE 20 - 1 5/8” - 12 UN	SAE 12 - 1 1/16” - 12 UN		

Aux connection - see previous table

0 Not machined **1** Aux size 1 **2** Aux size 2

Filtration rating (filter media)

A03	Inorganic microfiber 3 µm	**M25**	Wire mesh 25 µm
A06	Inorganic microfiber 6 µm	**M60**	Wire mesh 60 µm
A10	Inorganic microfiber 10 µm	**M90**	Wire mesh 90 µm
A16	Inorganic microfiber 16 µm	**P10**	Resin impregnated paper 10 µm
A25	Inorganic microfiber 25 µm	**P25**	Resin impregnated paper 25 µm

Bypass valve

E 3 bar
B 1.75 bar

Executions

Base	zerospark	
P01	**Z01**	MP Filtri standard
Pxx	**Zxx**	Customized

FILTER ELEMENT

Configuration example 1:	MFX100	1	A06	H	B	E	P01
Configuration example 2:	MFX100	3	M25	N	V		P01

Element series and size

MFX100 Filter Element with MYCLEAN feature

Element length

1 | **2** | **3** | **4** |

Filtration rating (filter media)

A03	Inorganic microfiber 3 µm	**M25**	Wire mesh 25 µm
A06	Inorganic microfiber 6 µm	**M60**	Wire mesh 60 µm
A10	Inorganic microfiber 10 µm	**M90**	Wire mesh 90 µm
A16	Inorganic microfiber 16 µm	**P10**	Resin impregnated paper 10 µm
A25	Inorganic microfiber 25 µm	**P25**	Resin impregnated paper 25 µm

Element Δp		Filter media Axx	Mxx	Pxx
N	10 bar	-	•	•
H	10 bar	•	-	-

Seals

B NBR
V FPM

Bypass valve

E 3 bar
- 1.75 bar

Executions

Base	zerospark	
P01	**Z01**	MP Filtri standard
Pxx	**Zxx**	Customized

CLOGGING INDICATORS

See page 710-711

BVA Axial pressure gauge
BVR Radial pressure gauge
BVP Visual pressure indicator with automatic reset
BVQ Visual pressure indicator with manual reset
BEA Electrical pressure indicator
BEM Electrical pressure indicator
BLA Electrical / visual pressure indicator

ADDITIONAL FEATURES

See page 266

TE Extension tube
DFS Diffuser with fast lock connection
DPT Dipstick

MPTX120		
Filter length	**H1 [mm]**	**H2 [mm]**
1	99	120
2	144	170
3	222	250
4	324	350

Connections	T
G1-G2-G3	G 1/8”
G4-G5-G6-G7-G8-G9	1/8” NPT

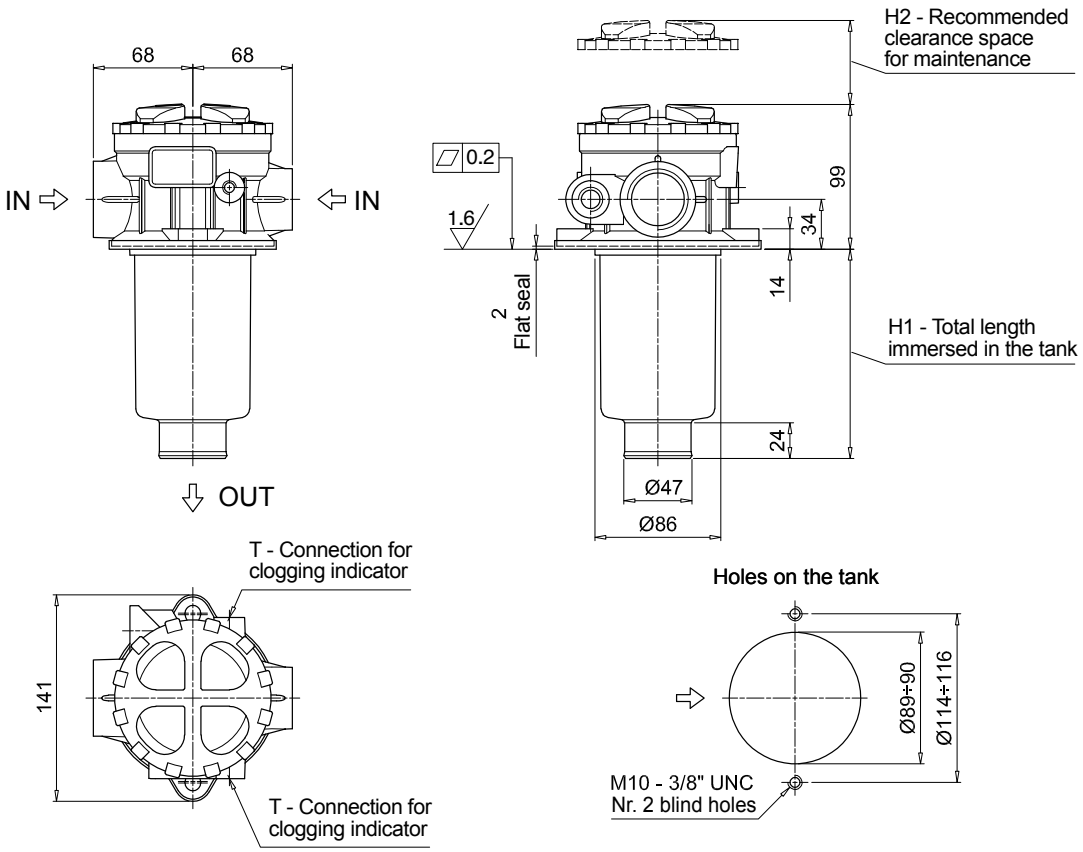

MPTX SPARE PARTS

Order number for spare parts

MPTX 025 - 027 - 110

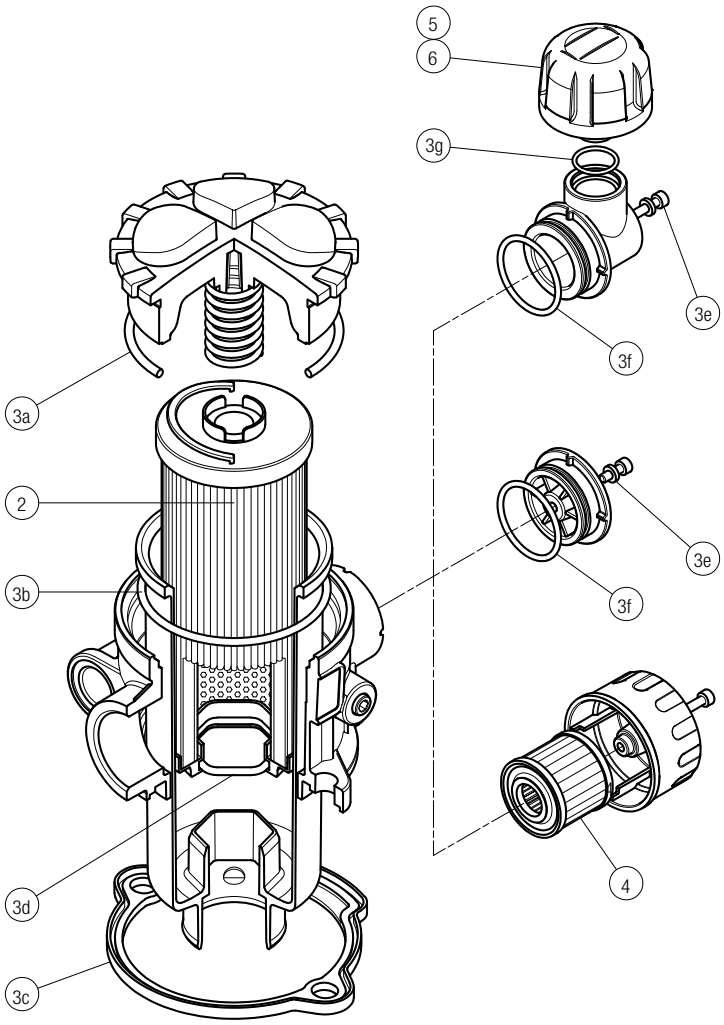

Item:	Q.ty: 1 pc. 2	Q.ty: 1 pc. 3 (3a ÷ 3g)		Q.ty: 1 pc. 4	Q.ty: 1 pc. 5	Q.ty: 1 pc. 6
Filter series	**Filter element**	**Seal Kit code number**		**Air breather filter element - version:**		
		NBR	**FPM**	**C**	**D**	**P**
MPTX 025	See order table	02050701	02050702	10 µm A3L03	10 µm SAP50G3L03A0P01	10 µm SAP50G3L03A1P01
MPTX 027		02050703	02050704	10 µm A3L03	10 µm SAP50G3L03A0P01	10 µm SAP50G3L03A1P01
MPTX 110		02050709	02050710	10 µm A5L03	10 µm SAP50G3L03A0P01	10 µm SAP50G3L03A1P01

MPTX 116

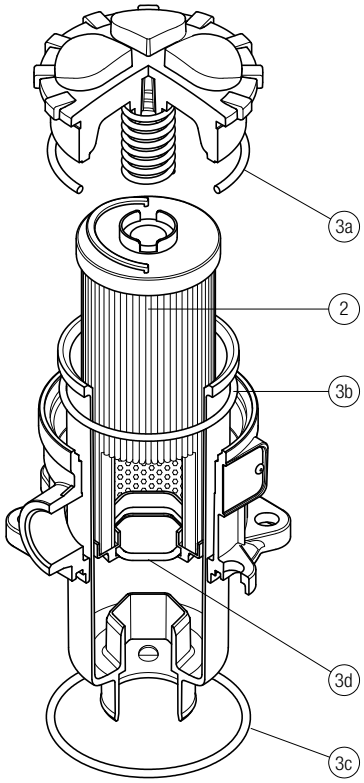

Item:	Q.ty: 1 pc. 2	Q.ty: 1 pc. 3 (3a ÷ 3d)	
Filter series	**Filter element**	**Seal Kit code number**	
		NBR	**FPM**
MPTX 116	See order table	02050737	02050738

Order number for spare parts

MPTX 114

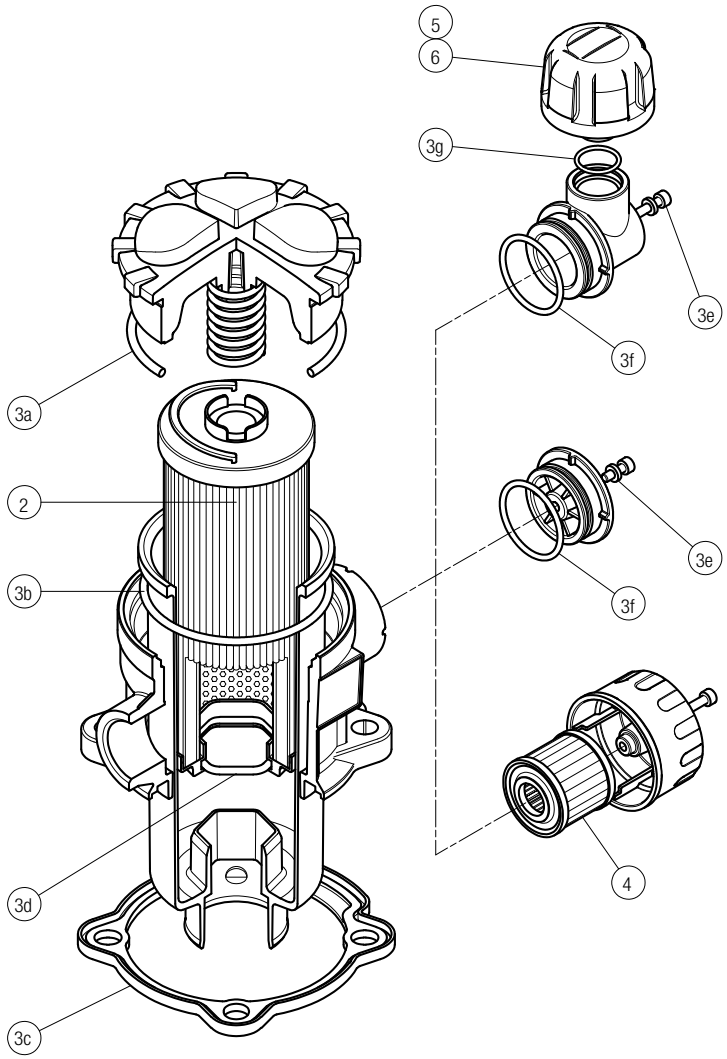

Item:	Q.ty: 1 pc. 2	Q.ty: 1 pc. 3 (3a ÷ 3g)		Q.ty: 1 pc. 4	Q.ty: 1 pc. 5	Q.ty: 1 pc. 6
Filter series	Filter element	Seal Kit code number NBR	FPM	Air breather filter element - version: C	D	P
MPTX 114	See order table	02050707	02050708	10 µm A5L03	10 µm SAP50G3L03A0P01	10 µmm SAP50G3L03A1P01

MPTX 120

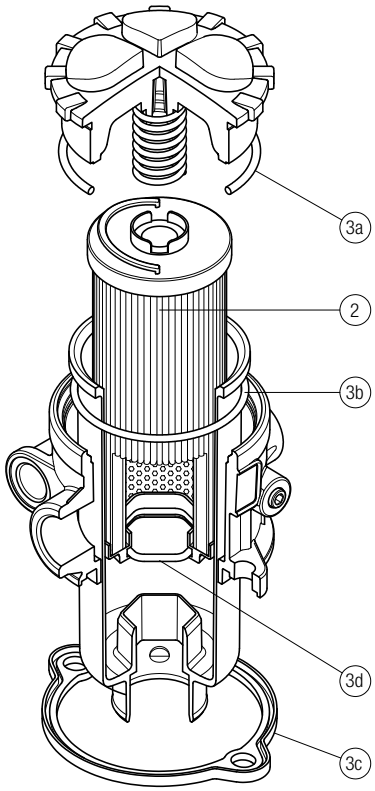

Item:	Q.ty: 1 pc. 2	Q.ty: 1 pc. 3 (3a ÷ 3d)	
Filter series	Filter element	Seal Kit code number NBR	FPM
MPTX 120	See order table	02050711	02050712

THE X CONCEPT FOR OUR FILTERS

Protect the performance of your system with MYclean.
Quality and efficiency are fundamental for MP Filtri:
this exclusive new filter element possesses polygon shape geometry and specific seal that ensures only original spare parts can be used - ensuring correct operation and higher system reliability.

MFBX series

with MYCLEAN MFX Filter Element

- **Protects the machine from improper use of non-original products.**
- **Safety of constant quality protection & reliability**

With exclusive filter element you are sure that only MP Filtri filter elements can be used, ensuring the best cleaning level of the oil due to the use of originals filter elements.

The products identified as MFBX are protected by:

- Italian Patent n° 102014902261205
- Canadian Patent n° 2,937,258
- European Patent n° 3 124 092 B1
- US Patent n° 20170030384 A1

TOGETHER WITH MYCLEAN, AS OPTION, MFBX SERIES CAN BE PROVIDED WITH

zerospark®

THE ANTI-STATIC FILTERS

THE Z CONCEPT FOR OUR FILTERS

Zerospark® is a specialist solution designed to solve the problem of electrostatic discharge inside hydraulic filters. Caused by the electrical charge build-up due to the passage of oil through the filters, this can result in damage to filter elements, oils and circuit components. It can even cause fire hazards in environments where flammable materials are present.

MFBX series
BOWL ASSEMBLY

Maximum working pressure up to 800 kPa (8 bar) - Flow rate up to 700 l/min

MFBX GENERAL INFORMATION

Description

Return filter | Bowl assembly

Maximum working pressure up to 800 kPa (8 bar)
Flow rate up to 700 l/min

MFBX is a range of return filter kits for protection of the reservoir against the system contamination.
They are directly integrated in the moulded reservoir in immersed or semi-immersed position to save space into the tank.
Treaded or flanged covers can be provided.
The filter output must be always immersed into the fluid to avoid aeration or foam generation into the reservoir.

Available features:
- Fine filtration rating, to get a good cleanliness level into the reservoir
- Bypass valve integrated into the filter element, to relieve excessive pressure drop across the filter media
- Extension tube, to be used in deep reservoirs (sold as separate item)
- Diffuser, to reduce the risk of aeration, foaming and noise (sold as separate item)
- MyClean interface connection, to protect the product against non-original spare parts
- External protective wrap, to optimize the flow through the element and to save the element efficiency against non-proper handling

Common applications:
Mobile machines

Technical data

Bowl assembly materials
- Cover
  Polyamide: MFBX 020-030-100
  Aluminium: MFBX 180-190

- Bowl: Polyamide

Filter element materials
- Caps: Polyamide
- Spring: Spring steel

Bypass valve
- Opening pressure 175 kPa (1.75 bar) ±10%
- Opening pressure 300 kPa (3 bar) ±10%

Δp element type
- Microfibre filter elements - series H: 10 bar
- Fluid flow through the filter element from OUT to IN

Seals
- Standard NBR series A
- Optional FPM series V

Temperature
From -25 °C to +110 °C

Note
MFBX filters are provided for vertical mounting

Weights [kg] and volumes [dm³]

Filter series	Weights [kg]					Volumes [dm³]				
	Length	1	2	3	4	Length	1	2	3	4
MFBX 020		0.25	0.35	0.40	-		0.10	0.15	0.20	-
MFBX 030		0.25	-	-	-		0.15	-	-	-
MFBX 100		0.50	0.60	0.75	0.95		0.35	0.50	0.80	1.10
MFBX 180		1.60	2.40	-	-		1.50	2.90	-	-
MFBX 190		-	2.40	-	-		-	3.00	-	-

FILTER ASSEMBLY SIZING
Flow rates [l/min]

		Filter element design - H series					Filter element design - N series		
Filter series	Length	A03	A06	A10	A16	A25	M25 M60 M90	P10	P25
MFBX 020	**1**	7	10	23	28	42	59	51	54
	2	17	20	45	48	56	72	64	67
	3	21	24	50	55	59	76	74	75
MFBX 030	**1**	7	10	24	29	47	84	60	66
MFBX 100	**1**	18	20	53	56	65	153	87	96
	2	28	38	65	75	95	158	111	123
	3	48	55	125	135	169	289	224	251
	4	79	89	180	185	198	306	264	289
MFBX 180	**1**	127	148	235	243	278	441	285	299
	2	231	262	358	382	388	472	404	412
MFBX 190	**2**	261	305	489	528	546	696	583	598

Maximum flow rate for a complete return filter with a pressure drop Δp = 0.5 bar.
The reference fluid has a kinematic viscosity of 30 mm^2/s (cSt) and a density of 0.86 kg/dm^3.
For different pressure drop or fluid viscosity we recommend to use our selection software available on www.mpfiltri.com.
You can also calculate the right size using the formulas present on the FILTER SIZING paragraph at the beginning of the full catalogue or at the beginning of the filter family brochure.
Please, contact our Sales Department for further additional information.

Hydraulic symbols

Filter series	Style 1 connection
MFBX 020	•
MFBX 030	•
MFBX 100	•
MFBX 180	•
MFBX 190	•

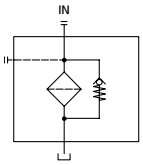

Designation & Ordering code

COMPLETE FILTER

Configuration example 1:	MFBX100	1	A	2	A10	H	E	P01
Configuration example 2:	MFBX180	2	V	1	M25	N	B	P01

Series and size

MFBX020 | **MFBX100** | **MFBX190** Filter featuring
MFBX030 | **MFBX180** MY CLEAN Filter Element

Length	MFBX020	MFBX030	MFBX100	MFBX180	MFBX190
1	•	•	•	•	-
2	•	-	•	•	•
3	•	-	•	-	-
4	-	-	•	-	-

Seals

A NBR
V FPM

Version	MFBX020	MFBX030	MFBX100	MFBX180	MFBX190
1 Without cover	•	•	•	•	•
2 With flanged cover type MPF	-	•	•	•	•
3 With threaded cover type MPT	•	-	•	-	-

Filtration rating (filter media)

A03	Inorganic microfiber 3 µm	**M25**	Wire mesh 25 µm
A06	Inorganic microfiber 6 µm	**M60**	Wire mesh 60 µm
A10	Inorganic microfiber 10 µm	**M90**	Wire mesh 90 µm
A16	Inorganic microfiber 16 µm	**P10**	Resin impregnated paper 10 µm
A25	Inorganic microfiber 25 µm	**P25**	Resin impregnated paper 25 µm

Element Δp	Filter media Axx	Mxx	Pxx
N 10 bar	-	•	•
H 10 bar	•	-	-

Bypass valve

E 3 bar
B 1.75 bar

Executions

Base	zerospark	
P01	**Z01**	MP Filtri standard
Pxx	**Zxx**	Customized

FILTER ELEMENT

Configuration example 1:	MFX180	2	M25	H	V		P01
Configuration example 2:	MFX100	1	A10	N	B	E	P01

Element series and size

MFX020 | **MFX100**
MFX030 | **MFX180** Filter Element with MY CLEAN feature

Element length	MFX020	MFX030	MFX100	MFX180	MFX190
1	•	•	•	•	-
2	•	-	•	•	•
3	•	-	•	-	-
4	-	-	•	-	-

Filtration rating (filter media)

A03	Inorganic microfiber 3 µm	**M25**	Wire mesh 25 µm
A06	Inorganic microfiber 6 µm	**M60**	Wire mesh 60 µm
A10	Inorganic microfiber 10 µm	**M90**	Wire mesh 90 µm
A16	Inorganic microfiber 16 µm	**P10**	Resin impregnated paper 10 µm
A25	Inorganic microfiber 25 µm	**P25**	Resin impregnated paper 25 µm

Element Δp	Filter media Axx	Mxx	Pxx
N 10 bar	-	•	•
H 10 bar	•	-	-

Seals

B NBR
V FPM

Bypass valve

E 3 bar
- 1.75 bar

Executions

Base	zerospark	
P01	**Z01**	MP Filtri standard
Pxx	**Zxx**	Customized

ACCESSORIES

See page 266

		MFBX020	MFBX030	MFBX100	MFBX180	MFBX190
TE	Extension tube	•	•	•	•	•
DFS	Diffuser with fast lock connection	-	-	•	-	-

MFBX

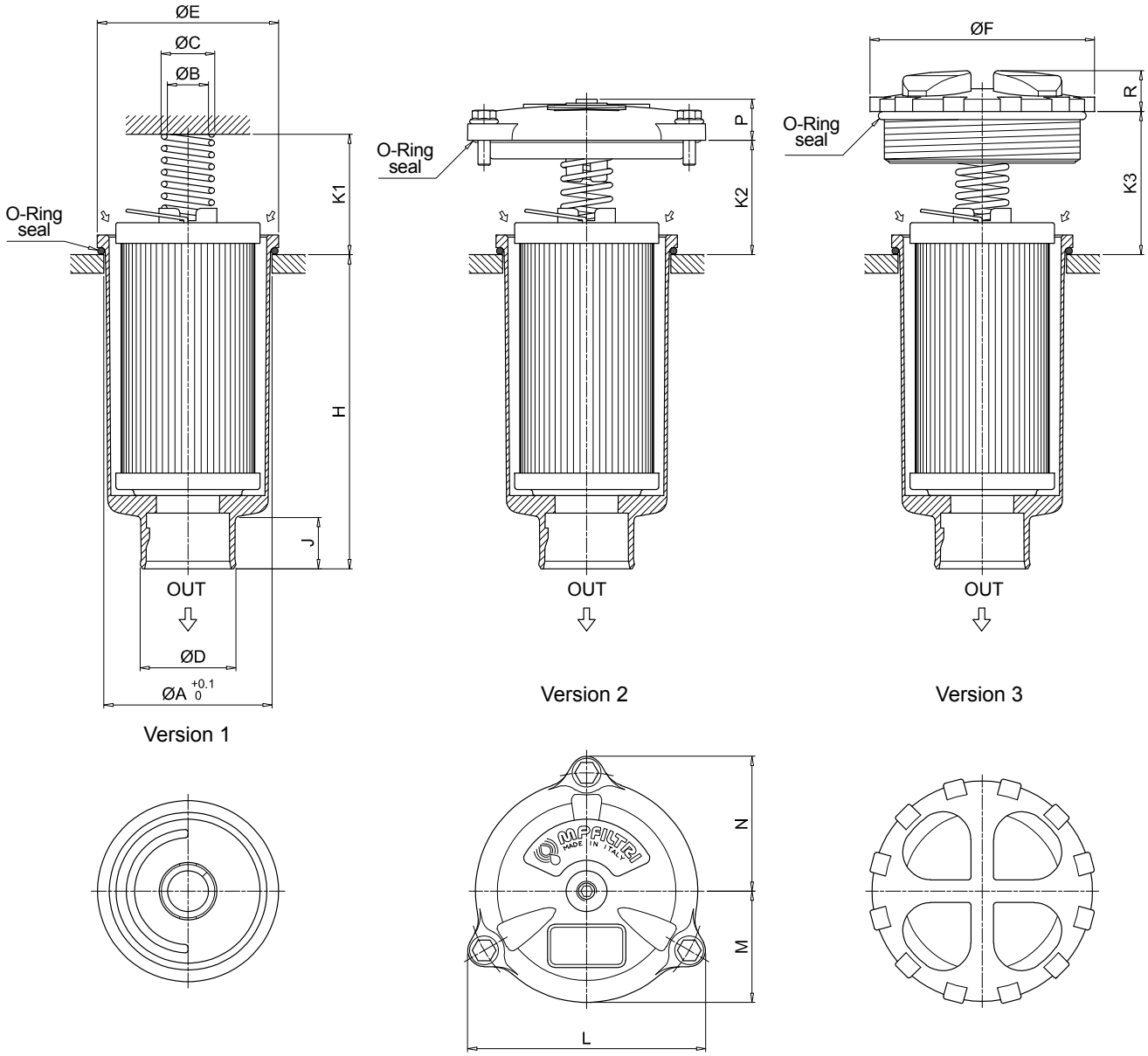

Filter size	Filter Length	ø A [mm]	ø B [mm]	ø C [mm]	ø D [mm]	ø E [mm]	ø F [mm]	H [mm]	J [mm]	K1 [mm]	K2 [mm]	K3 [mm]	L [mm]	M [mm]	N [mm]	P [mm]	R [mm]
020	1	52	20.5	26	32	56	75	111	24	42	-	36	-	-	-	-	18
	2	52	20.5	26	32	56	75	175	24	42	-	36	-	-	-	-	18
	3	52	20.5	26	32	56	75	214	24	42	-	36	-	-	-	-	18
030	1	60.5	20	25.5	32	68	-	93	21	33	35	-	92	42	52	18	-
100	1	80.5	20	26	47	88	111	109	24	58	55	69	116	54	66	20	20
	2	80.5	20	26	47	88	111	154	24	58	55	69	116	54	66	20	20
	3	80.5	20	26	47	88	111	232	24	58	55	69	116	54	66	20	20
	4	80.5	20	26	47	88	111	334	24	58	55	69	116	54	66	20	20
180	1	112.5	26	33.5	47	121	-	234	31	58	69	-	159	76	95	21	-
	2	112.5	26	33.5	47	121	-	447	31	58	69	-	159	76	95	21	-
190	2	112.5	26	33.5	50	121	-	454	38	58	69	-	159	76	95	21	-

Order number for spare parts

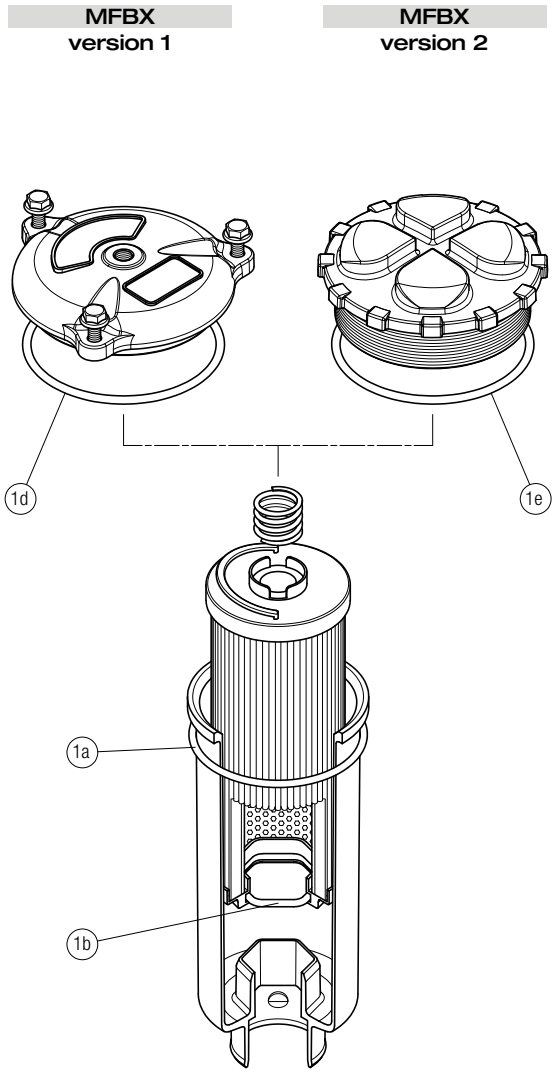

Item:	Q.ty: 1 pc. 1 (1a ÷ 1d)	
Filter series	Seal Kit code number NBR	FPM
MFBX 020	02050713	02050714
MFBX 030	02050715	02050716
MFBX 100	02050717	02050718
MFBX 180-190	02050719	02050720

MPF series

Maximum working pressure up to 800 kPa (8 bar) - Flow rate up to 900 l/min

MPF GENERAL INFORMATION

Description

Return filter

Maximum working pressure up to 800 kPa (8 bar)
Flow rate up to 900 l/min

MPF is a range of return filters for protection of the reservoir against the system contamination.
They are directly fixed to the reservoir, in immersed or semi-immersed position.
The filter output must be always immersed into the fluid to avoid aeration or foam generation into the reservoir.

Available features:
- Female threaded connections up to 2" and flanged connections up to 2", for a maximum flow rate of 900 l/min
- Multiple connections, to connect several return lines or drains
- Fine filtration rating, to get a good cleanliness level into the reservoir
- Bypass valve integrated into the filter element, to relieve excessive pressure drop across the filter media
- 2, 3 or 4 fixing holes for installation, to suit a variety of reservoir surfaces
- O-ring or Flat Seal to suit a variety of reservoir surfaces
- Oil dipstick, to easily check the level of the fluid into the reservoir (sold as separate item)
- Extension tube, to be used in deep reservoirs (sold as separate item)
- Diffuser, to reduce the risk of aeration, foaming and noise (sold as separate item)
- Filler plug, to fill cleaned fluid into the tank without an additional connection
- Visual, electrical and electronic clogging indicators

Common applications:
- Light industrial equipment
- Mobile application

Technical data

Filter housing materials
- Head: Aluminium

- Cover
  Polyamide: MPF 020-030-100-104-110
  Aluminium: MPF 181-182-184-191-192-194-400-410-450-451-750

- Bowl: Polyamide

Bypass valve
- Opening pressure 175 kPa (1.75 bar) ±10%
- Opening pressure 300 kPa (3 bar) ±10%

Δp element type
- Microfibre filter elements - series H: 10 bar
- Fluid flow through the filter element from OUT to IN

Seals
- Standard NBR series A
- Optional FPM series V

Temperature
From -25 °C to +110 °C

Note
MPF filters are provided for vertical mounting

Weights [kg] and volumes [dm³]

Filter series	Weights [kg]					Volumes [dm³]				
	Length	1	2	3	4	Length	1	2	3	4
MPF 020		0.30	-	-	-		0.26	-	-	-
MPF 030		0.40	-	-	-		0.29	-	-	-
MPF 100		0.61	0.64	0.67	0.74		0.64	0.85	1.20	1.65
MPF 104		0.82	0.96	1.02	1.25		0.64	0.85	1.20	1.65
MPF 110		0.64	0.68	0.71	0.78		-	-	-	-
MPF 181		2.20	3.00	-	-		2.50	4.00	-	-
MPF 182		2.30	3.10	-	-		2.50	4.00	-	-
MPF 184		2.55	3.45	-	-		2.65	4.45	-	-
MPF 191		-	3.00	-	-		-	4.25	-	-
MPF 192		-	3.10	-	-		-	4.25	-	-
MPF 194		-	3.45	-	-		-	4.45	-	-
MPF 400		3.35	3.65	3.90	-		3.70	4.60	5.40	-
MPF 410		3.55	3.85	4.10	-		3.70	4.60	5.40	-
MPF 450-451		3.95	4.25	4.50	-		3.70	4.60	5.40	-
MPF 750		6.30	-	-	-		8.45	-	-	-

FILTER ASSEMBLY SIZING
Flow rates [l/min]

		Filter element design - H series					Filter element design - N series		
Filter series	Length	A03	A06	A10	A16	A25	M25 M60 M90	P10	P25
MPF 020	**1**	7	10	23	28	42	59	51	54
MPF 030	**1**	7	10	24	29	47	84	60	66
MPF 100-104-110	**1**	18	20	53	56	65	153	87	96
	2	28	38	65	75	95	158	111	123
	3	48	55	125	135	169	289	224	251
	4	79	89	180	185	198	306	264	289
MPF 181-182-184	**1**	127	148	235	243	278	441	285	299
	2	231	262	358	382	388	472	404	412
MPF 191-192-194	**2**	261	305	489	528	546	696	583	598
MPF 400	**1**	150	171	294	304	350	585	370	390
	2	237	252	454	462	589	868	619	645
	3	248	288	553	609	621	885	680	703
MPF 410	**1**	146	167	277	285	325	512	341	357
	2	226	239	396	402	485	644	503	519
	3	236	269	462	497	505	653	539	553
MPF 450-451	**1**	150	171	294	304	350	585	370	390
	2	237	252	454	462	589	868	619	645
	3	248	288	553	609	621	885	680	703
MPF 750	**1**	392	465	623	700	769	929	804	819

Maximum flow rate for a complete return filter with a pressure drop Δp = 0.5 bar.
The reference fluid has a kinematic viscosity of 30 mm^2/s (cSt) and a density of 0.86 kg/dm^3.
For different pressure drop or fluid viscosity we recommend to use our selection software available on www.mpfiltri.com.
You can also calculate the right size using the formulas present on the FILTER SIZING paragraph at the beginning of the full catalogue or at the beginning of the filter family brochure.
Please, contact our Sales Department for further additional information.

Hydraulic symbols

Filter series	Style 1 connection	Style 2 connections
MPF 020	•	-
MPF 030	•	-
MPF 100	•	-
MPF 104	•	-
MPF 110		•
MPF 181	•	-
MPF 182		•
MPF 184	•	•
MPF 191	•	-
MPF 192	•	-
MPF 194	•	•
MPF 400	•	-
MPF 410		•
MPF 450	•	-
MPF 451		•
MPF 750	•	-

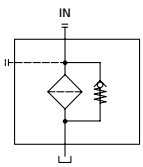

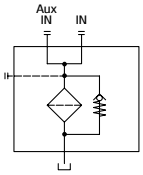

Pressure drop

Filter housings Δp pressure drop

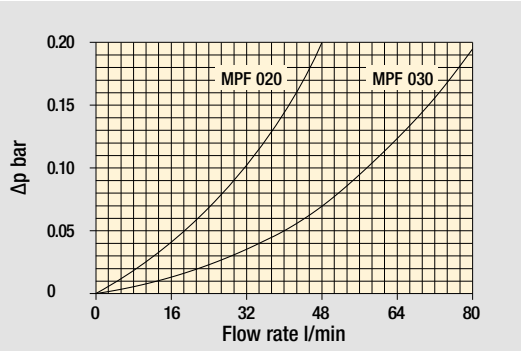

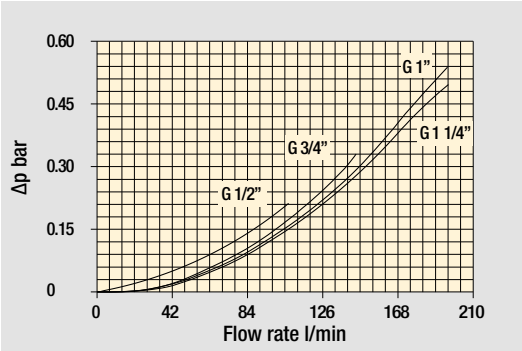

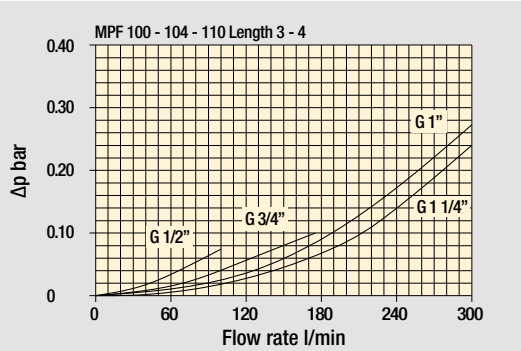

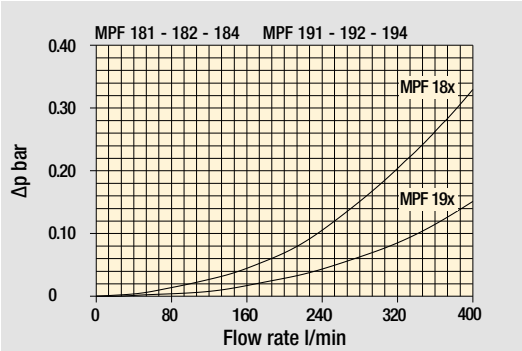

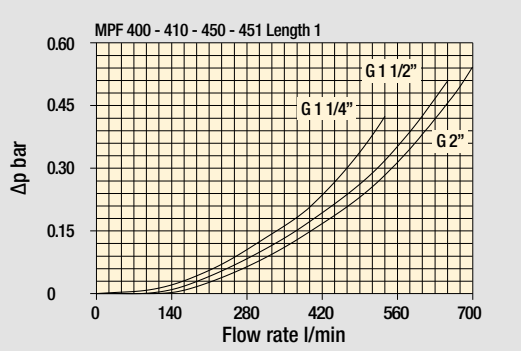

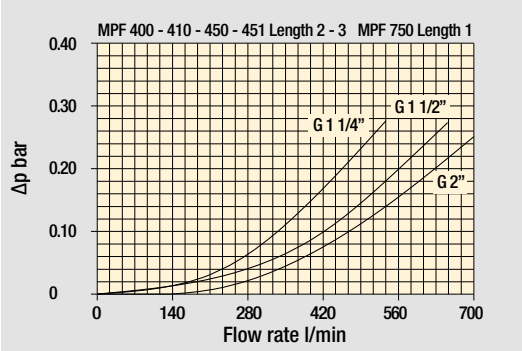

Bypass valve pressure drop

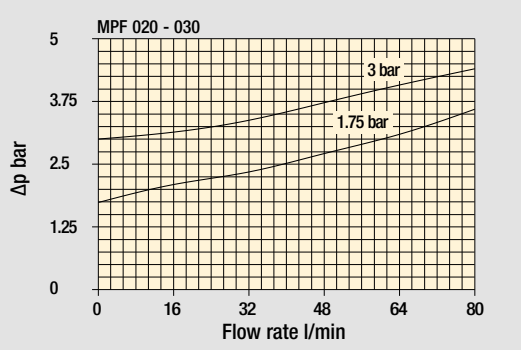

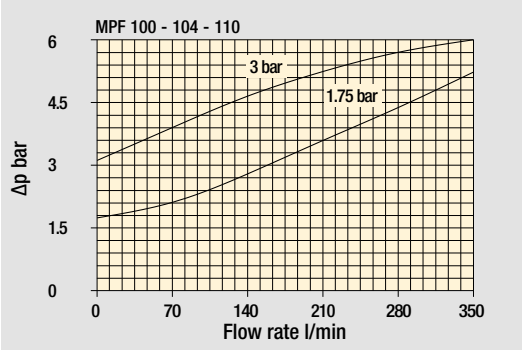

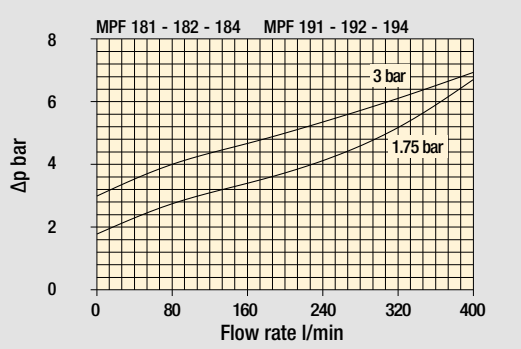

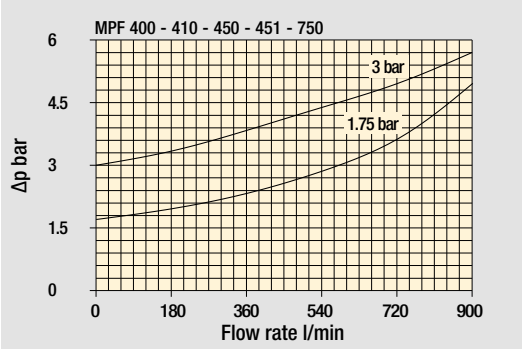

The curves are plotted using mineral oil with density of 0.86 kg/dm³ in compliance with ISO 3968. Δp varies proportionally with density.

Standard - Single IN port

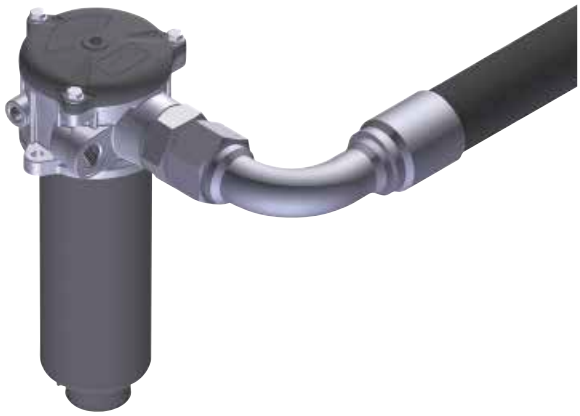

Double IN port
Option: double indicator port

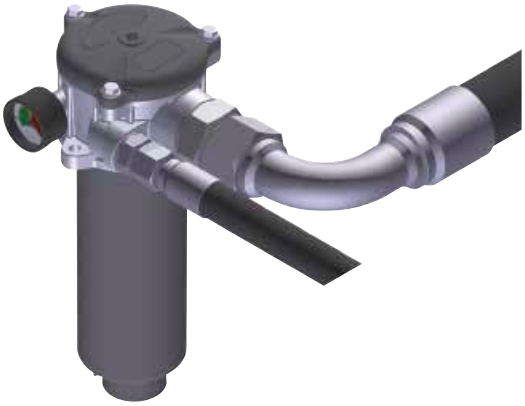

Double IN port - Drain port
Option: indicator port

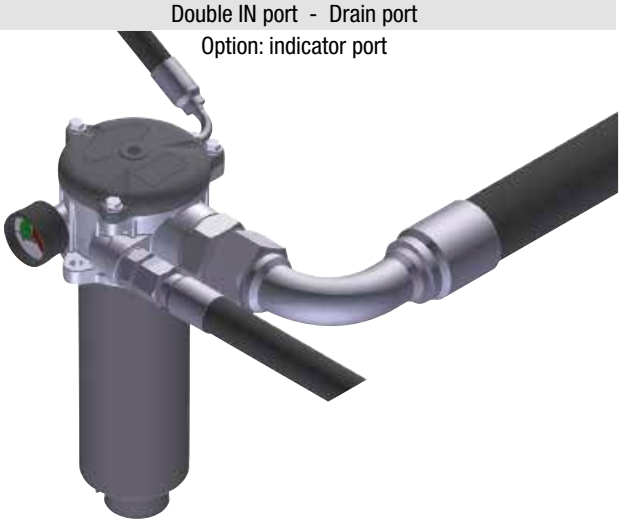

Double IN port - Double drain port

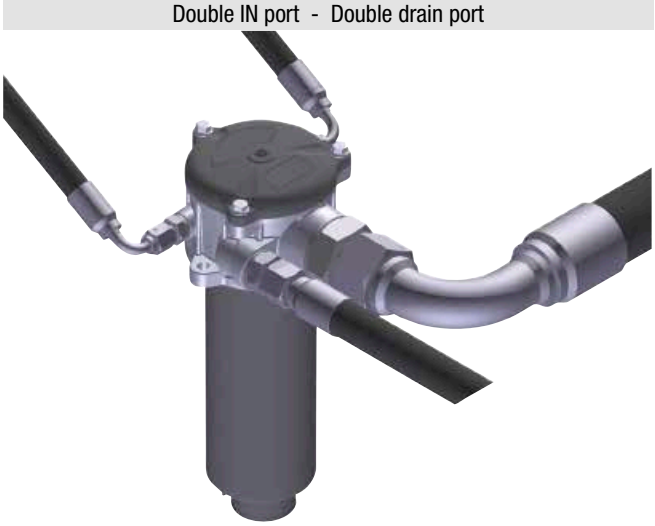

MPF MPF020 - MPF030

Designation & Ordering code

COMPLETE FILTER

Configuration example 1:	MPF020	1	A	P1	A10	H	E	P01
Configuration example 2:	MPF030	1	V	G1	M25	N	B	P01

Series and size

MPF020 | **MPF030** Filter element with standard spigot

Length

1

Seals and treatments

A NBR
V FPM
W NBR head anodized
Z FPM head anodized

Connections	Size 20	Size 30
P1 Hose barb ø12	•	-
G1 G 1/2"	-	•
G4 1/2" NPT	-	•
G7 SAE 8 - 3/4" - 16 UNF	-	•

Filtration rating (filter media)

A03 Inorganic microfiber 3 µm
A06 Inorganic microfiber 6 µm
A10 Inorganic microfiber 10 µm
A16 Inorganic microfiber 16 µm
A25 Inorganic microfiber 25 µm
M25 Wire mesh 25 µm
M60 Wire mesh 60 µm
M90 Wire mesh 90 µm
P10 Resin impregnated paper 10 µm
P25 Resin impregnated paper 25 µm

Element Δp	Filter media Axx	Mxx	Pxx
N 10 bar	-	•	•
H 10 bar	•	-	-

Bypass valve

E 3 bar
B 1.75 bar

Execution

P01 MP Filtri standard
Pxx Customized

FILTER ELEMENT

Configuration example 1:	MF030	1	A10	H	B	E	P01
Configuration example 2:	MF030	1	M25	N	V		P01

Element series and size

MF030 Filter element with standard spigot

Element length

1

Filtration rating (filter media)

A03 Inorganic microfiber 3 µm
A06 Inorganic microfiber 6 µm
A10 Inorganic microfiber 10 µm
A16 Inorganic microfiber 16 µm
A25 Inorganic microfiber 25 µm
M25 Wire mesh 25 µm
M60 Wire mesh 60 µm
M90 Wire mesh 90 µm
P10 Resin impregnated paper 10 µm
P25 Resin impregnated paper 25 µm

Element Δp	Filter media Axx	Mxx	Pxx
N 10 bar	-	•	•
H 10 bar	•	-	-

Seals

B NBR
V FPM

Bypass valve

E 3 bar
- 1.75 bar

Execution

P01 MP Filtri standard
Pxx Customized

CLOGGING INDICATORS

See page 710-711

BVA Axial pressure gauge
BVR Radial pressure gauge
BVP Visual pressure indicator with automatic reset
BVQ Visual pressure indicator with manual reset
BEA Electrical pressure indicator
BEM Electrical pressure indicator
BLA Electrical / visual pressure indicator

ADDITIONAL FEATURES

See page 266

TE Extension tube
T5 Filler plug M30x1.5

MPF020

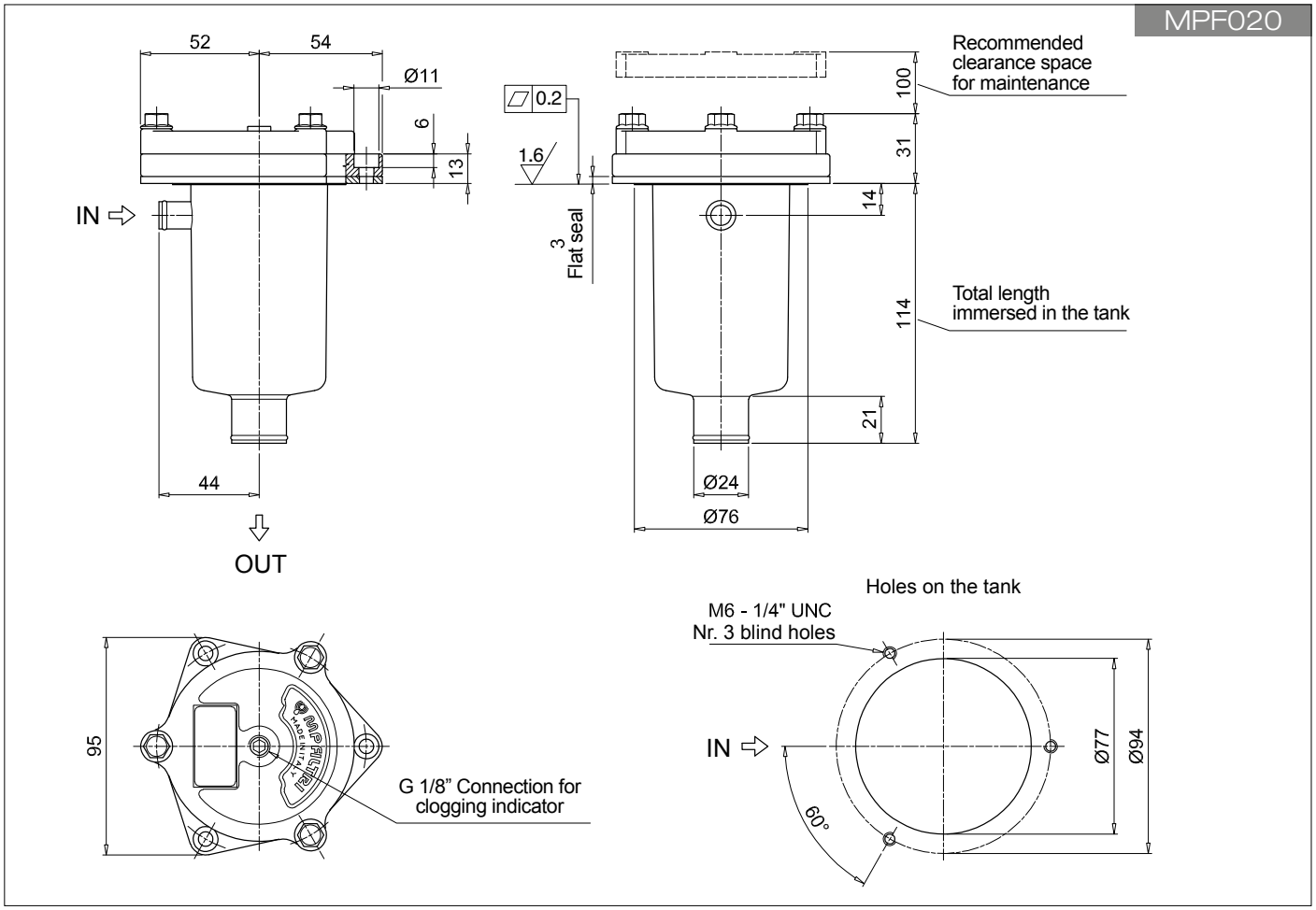

MPF030

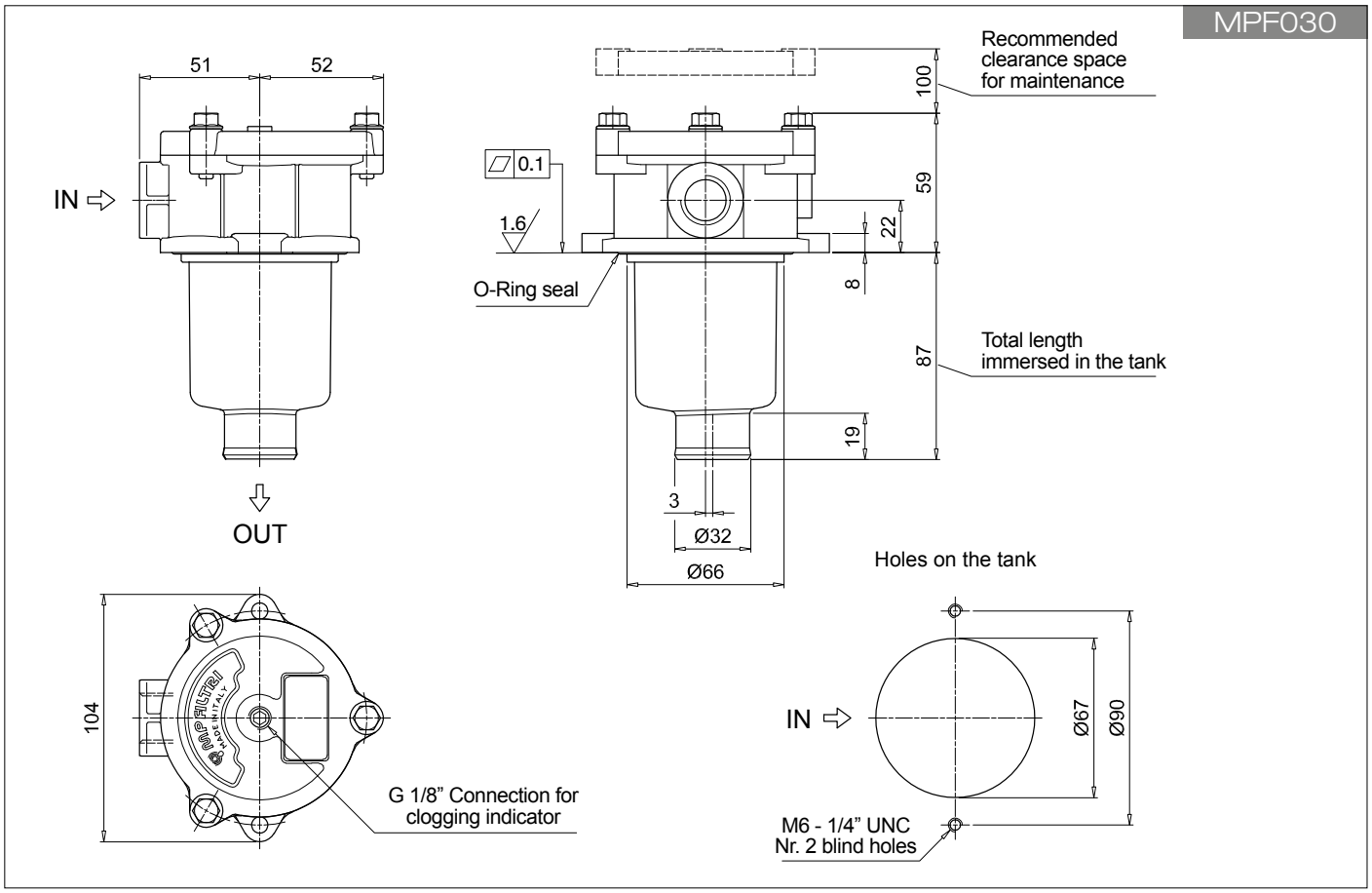

Designation & Ordering code

COMPLETE FILTER

Configuration example 1:	MPF100	2	W	G3	A06	H	B	P01
Configuration example 2:	MPF104	4	A	G8	P10	N	E	P01

Series and size

MPF100 | **MPF104** Filter element with standard spigot

Length

1 | **2** | **3** | **4** |

Seals and treatments

A	NBR
V	FPM
W	NBR head anodized
Z	FPM head anodized

Connections		Size 100	Size 104
G1	G 1/2"	•	•
G2	G 3/4"	•	•
G3	G 1"	•	•
G4	1/2" NPT	•	•
G5	3/4" NPT	•	•
G6	1" NPT	•	•

Connections		Size 100	Size 104
G7	SAE 8 - 3/4" - 16 UNF	•	•
G8	SAE 12 - 1 1/16" - 12 UN	•	•
G9	SAE 16 - 1 5/16" - 12 UN	•	•

Filtration rating (filter media)

A03	Inorganic microfiber 3 µm	**M25**	Wire mesh 25 µm
A06	Inorganic microfiber 6 µm	**M60**	Wire mesh 60 µm
A10	Inorganic microfiber 10 µm	**M90**	Wire mesh 90 µm
A16	Inorganic microfiber 16 µm	**P10**	Resin impregnated paper 10 µm
A25	Inorganic microfiber 25 µm	**P25**	Resin impregnated paper 25 µm

Element Δp		Filter media Axx	Mxx	Pxx
N	10 bar	-	•	•
H	10 bar	•	-	-

Bypass valve	
E	3 bar
B	1.75 bar

Execution	
P01	MP Filtri standard
Pxx	Customized

FILTER ELEMENT

Configuration example 1:	MF100	2	A06	H	B		P01
Configuration example 2:	MF100	4	P10	N	B	E	P01

Element series and size

MF100 Filter element with standard spigot

Element length

1 | **2** | **3** | **4** |

Filtration rating (filter media)

A03	Inorganic microfiber 3 µm	**M25**	Wire mesh 25 µm
A06	Inorganic microfiber 6 µm	**M60**	Wire mesh 60 µm
A10	Inorganic microfiber 10 µm	**M90**	Wire mesh 90 µm
A16	Inorganic microfiber 16 µm	**P10**	Resin impregnated paper 10 µm
A25	Inorganic microfiber 25 µm	**P25**	Resin impregnated paper 25 µm

Element Δp		Filter media Axx	Mxx	Pxx
N	10 bar	-	•	•
H	10 bar	•	-	-

Seals	
B	NBR
V	FPM

Bypass valve	
E	3 bar
-	1.75 bar

Execution	
P01	MP Filtri standard
Pxx	Customized

CLOGGING INDICATORS

See page 710-711

BVA	Axial pressure gauge
BVR	Radial pressure gauge
BVP	Visual pressure indicator with automatic reset
BVQ	Visual pressure indicator with manual reset
BEA	Electrical pressure indicator
BEM	Electrical pressure indicator
BLA	Electrical / visual pressure indicator

ADDITIONAL FEATURES

See page 266

TE	Extension tube
DFS	Diffuser with fast lock connection
T5	Filler plug M30x1.5
DPT	Dipstick

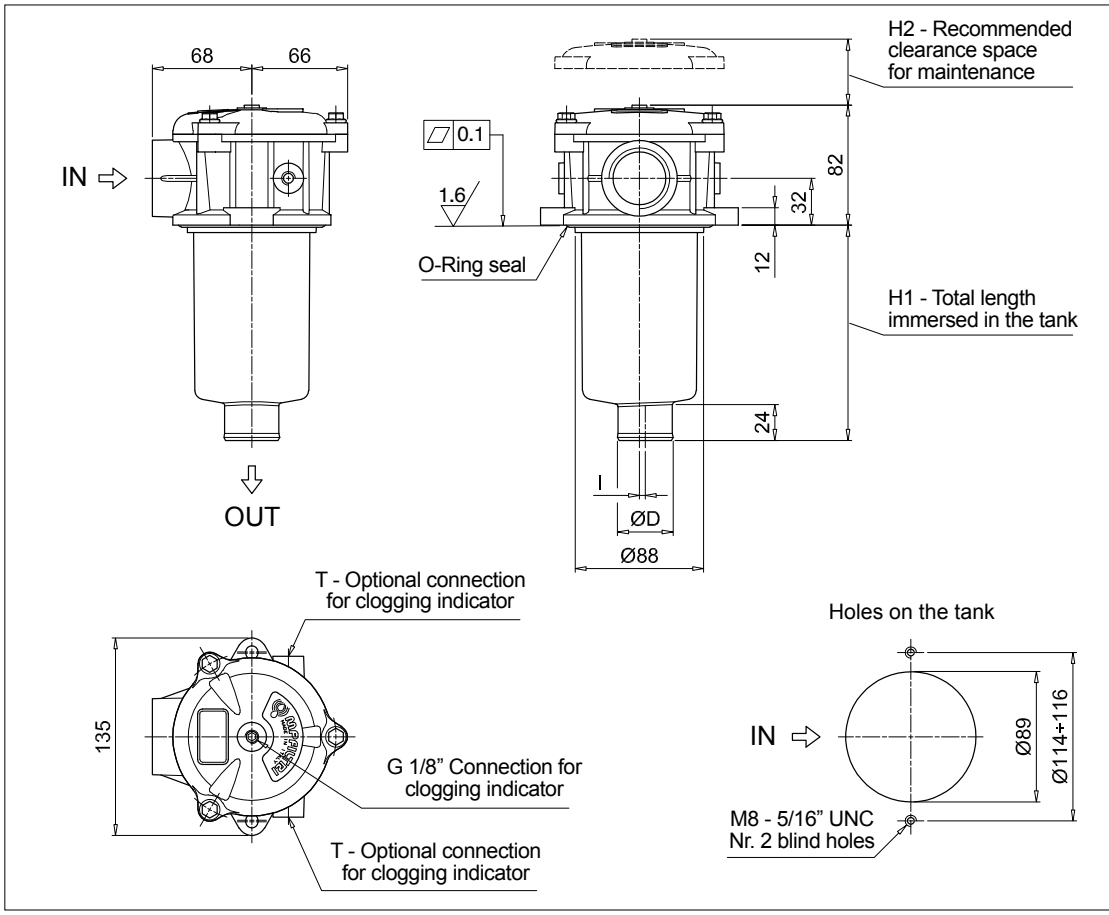

MPF100

Filter length	H1 [mm]	H2 [mm]	D [mm]	l [mm]
1	100	120	38	4
2	147	170	38	4
3	225	250	47	-
4	327	350	47	2.5

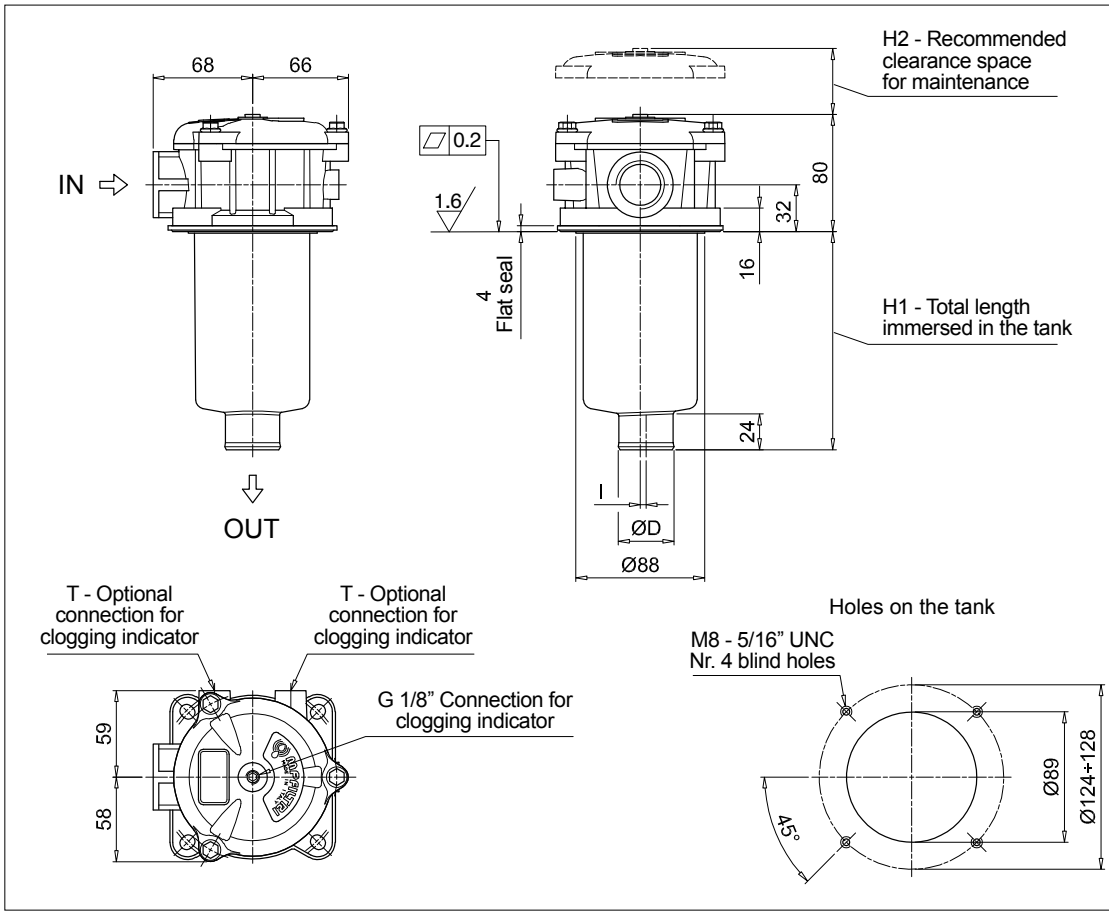

MPF104

Filter length	H1 [mm]	H2 [mm]	D [mm]	l [mm]
1	98	120	38	4
2	145	170	38	4
3	223	250	47	-
4	325	350	47	2.5

Designation & Ordering code

COMPLETE FILTER

Configuration example 1:	MPF110	2	A	G2	1	A16	H	E	P01
Configuration example 2:	MPF110	4	V	G12	1	M60	N	B	P01

Series and size

MPF110 Filter element with standard spigot

Length

1 | 2 | 3 | 4 |

Seals and treatments

A	NBR	**W**	NBR head anodized
V	FPM	**Z**	FPM head anodized

Main Connections		Aux size 1	Aux size 2
G1	G 1/2"	G 3/8"	G 1/2"
G2	G 3/4"		
G3	G 1"		
G4	1/2" NPT	3/8" NPT	1/2" NPT
G5	3/4" NPT		
G6	1" NPT		

Main Connections		Aux size 1	Aux size 2
G7	SAE 8 - 3/4" - 16 UNF	SAE 6 - 9/16"- 18 UNF	SAE 8 - 3/4"- 16 UNF
G8	SAE 12 - 1 1/16" - 12 UN		
G9	SAE 16 - 1 5/16" - 12 UN		
G10	G 1 1/4"	G 3/8"	G 1/2"
G11	1 1/4" NPT	3/8" NPT	1/2" NPT
G12	SAE 20 - 1 5/8" - 12 UN	SAE 6 - 9/16"- 18 UNF	SAE 8 - 3/4"- 16 UNF

Aux connection - see previous table

1	Aux size 1	**2**	Aux size 2

Filtration rating (filter media)

A03	Inorganic microfiber 3 µm	**M25**	Wire mesh 25 µm
A06	Inorganic microfiber 6 µm	**M60**	Wire mesh 60 µm
A10	Inorganic microfiber 10 µm	**M90**	Wire mesh 90 µm
A16	Inorganic microfiber 16 µm	**P10**	Resin impregnated paper 10 µm
A25	Inorganic microfiber 25 µm	**P25**	Resin impregnated paper 25 µm

Element Δp		Filter media Axx	Mxx	Pxx
N	10 bar	-	•	•
H	10 bar	•	-	-

Bypass valve	
E	3 bar
B	1.75 bar

Execution	
P01	MP Filtri standard
Pxx	Customized

FILTER ELEMENT

Configuration example 1:	MF100	2	A16	H	B	E	P01
Configuration example 2:	MF100	4	M60	N	V		P01

Element series and size

MF100 Filter element with standard spigot

Element length

1 | 2 | 3 | 4 |

Filtration rating (filter media)

A03	Inorganic microfiber 3 µm	**M25**	Wire mesh 25 µm
A06	Inorganic microfiber 6 µm	**M60**	Wire mesh 60 µm
A10	Inorganic microfiber 10 µm	**M90**	Wire mesh 90 µm
A16	Inorganic microfiber 16 µm	**P10**	Resin impregnated paper 10 µm
A25	Inorganic microfiber 25 µm	**P25**	Resin impregnated paper 25 µm

Element Δp		Filter media Axx	Mxx	Pxx
N	10 bar	-	•	•
H	10 bar	•	-	-

Seals	
B	NBR
V	FPM

Bypass valve	
E	3 bar
-	1.75 bar

Execution	
P01	MP Filtri standard
Pxx	Customized

CLOGGING INDICATORS

See page 710-711

BVA	Axial pressure gauge	**BEA**	Electrical pressure indicator
BVR	Radial pressure gauge	**BEM**	Electrical pressure indicator
BVP	Visual pressure indicator with automatic reset	**BLA**	Electrical / visual pressure indicator
BVQ	Visual pressure indicator with manual reset		

ADDITIONAL FEATURES

See page 266

TE	Extension tube	**T5**	Filler plug M30x1.5
DFS	Diffuser with fast lock connection	**DPT**	Dipstick

MPF110				
Filter length	H1 [mm]	H2 [mm]	D [mm]	l [mm]
1	100	120	38	4
2	147	170	38	4
3	225	250	47	-
4	327	350	47	2.5

Connections	T
G1-G2-G3	G 1/8”
G4-G5-G6-G7-G8-G9	1/8” NPT
G10	G 1/8”
G11-G12	1/8” NPT

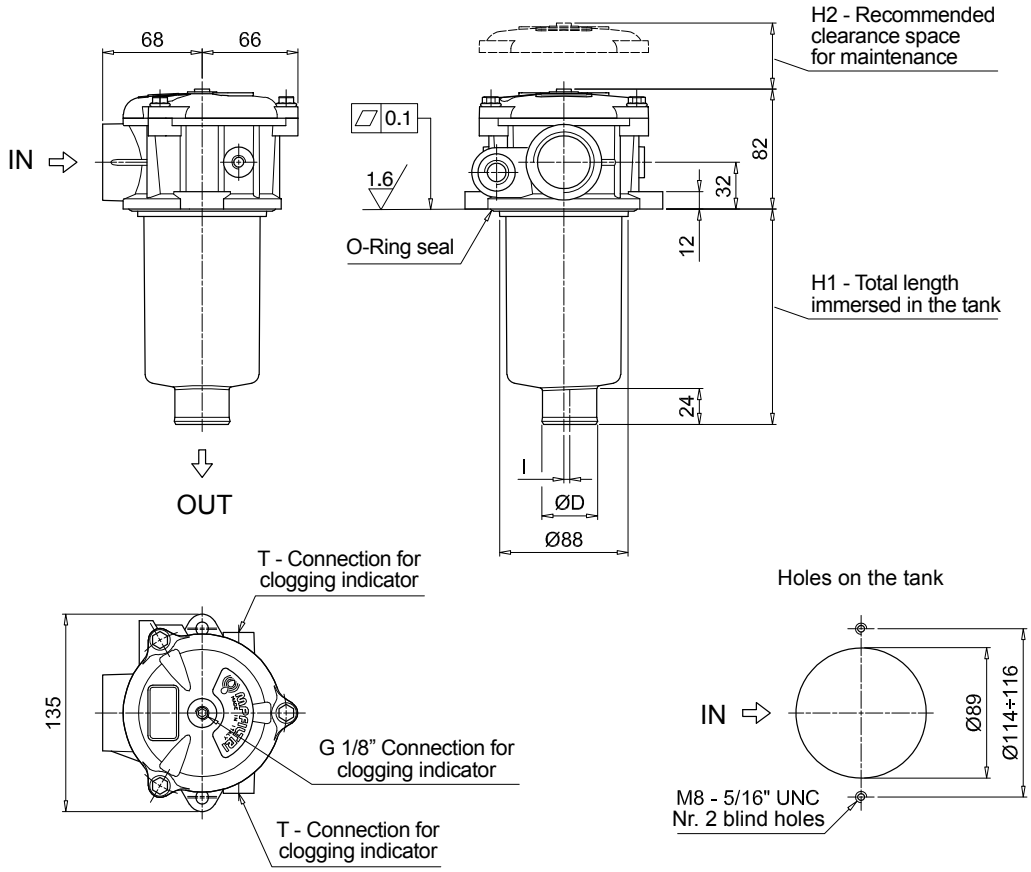

Designation & Ordering code

COMPLETE FILTER

Configuration example 1:	MPF181	1	A	G1	A25	H	E	P01
Configuration example 2:	MPF191	2	V	G2	P10	N	B	P01

Series and size

MPF181 | **MPF191** Filter element with standard spigot

Length	Size 181	Size 191
1	•	-
2	•	•

Seals and treatments

A	NBR		**B**	NBR	flat seal on head
V	FPM		**D**	FPM	flat seal on head
W	NBR	head anodized	**L**	NBR	head anodized, flat seal on head
Z	FPM	head anodized	**M**	FPM	head anodized, flat seal on head

Connections

G1	G 1 1/4”	**G5**	1 1/2” NPT
G2	G 1 1/2”	**G7**	SAE 20 - 1 5/8” - 12 UN
G4	1 1/4” NPT	**G8**	SAE 24 - 1 7/8” - 12 UN

Filtration rating (filter media)

A03	Inorganic microfiber 3 µm	**M25**	Wire mesh 25 µm
A06	Inorganic microfiber 6 µm	**M60**	Wire mesh 60 µm
A10	Inorganic microfiber 10 µm	**M90**	Wire mesh 90 µm
A16	Inorganic microfiber 16 µm	**P10**	Resin impregnated paper 10 µm
A25	Inorganic microfiber 25 µm	**P25**	Resin impregnated paper 25 µm

Element Δp		Filter media Axx	Mxx	Pxx
N	10 bar	-	•	•
H	10 bar	•	-	-

Bypass valve	
E	3 bar
B	1.75 bar

Execution	
P01	MP Filtri standard
Pxx	Customized

FILTER ELEMENT

Configuration example 1:	MF180	1	A25	H	B	E	P01
Configuration example 2:	MF190	2	P10	N	V		P01

Element series and size

MF180 | **MF190** Filter element with standard spigot

Element length	Size 180	Size 190
1	•	-
2	•	•

Filtration rating (filter media)

A03	Inorganic microfiber 3 µm	**M25**	Wire mesh 25 µm
A06	Inorganic microfiber 6 µm	**M60**	Wire mesh 60 µm
A10	Inorganic microfiber 10 µm	**M90**	Wire mesh 90 µm
A16	Inorganic microfiber 16 µm	**P10**	Resin impregnated paper 10 µm
A25	Inorganic microfiber 25 µm	**P25**	Resin impregnated paper 25 µm

Element Δp		Filter media Axx	Mxx	Pxx
N	10 bar	-	•	•
H	10 bar	•	-	-

Seals	
B	NBR
V	FPM

Bypass valve	
E	3 bar
-	1.75 bar

Execution	
P01	MP Filtri standard
Pxx	Customized

CLOGGING INDICATORS

See page 710-711

BVA	Axial pressure gauge	**BEA**	Electrical pressure indicator
BVR	Radial pressure gauge	**BEM**	Electrical pressure indicator
BVP	Visual pressure indicator with automatic reset	**BLA**	Electrical / visual pressure indicator
BVQ	Visual pressure indicator with manual reset		

ADDITIONAL FEATURES

See page 266

TE	Extension tube
Sxx	Extension tube
T5	Filler plug M30x1.5

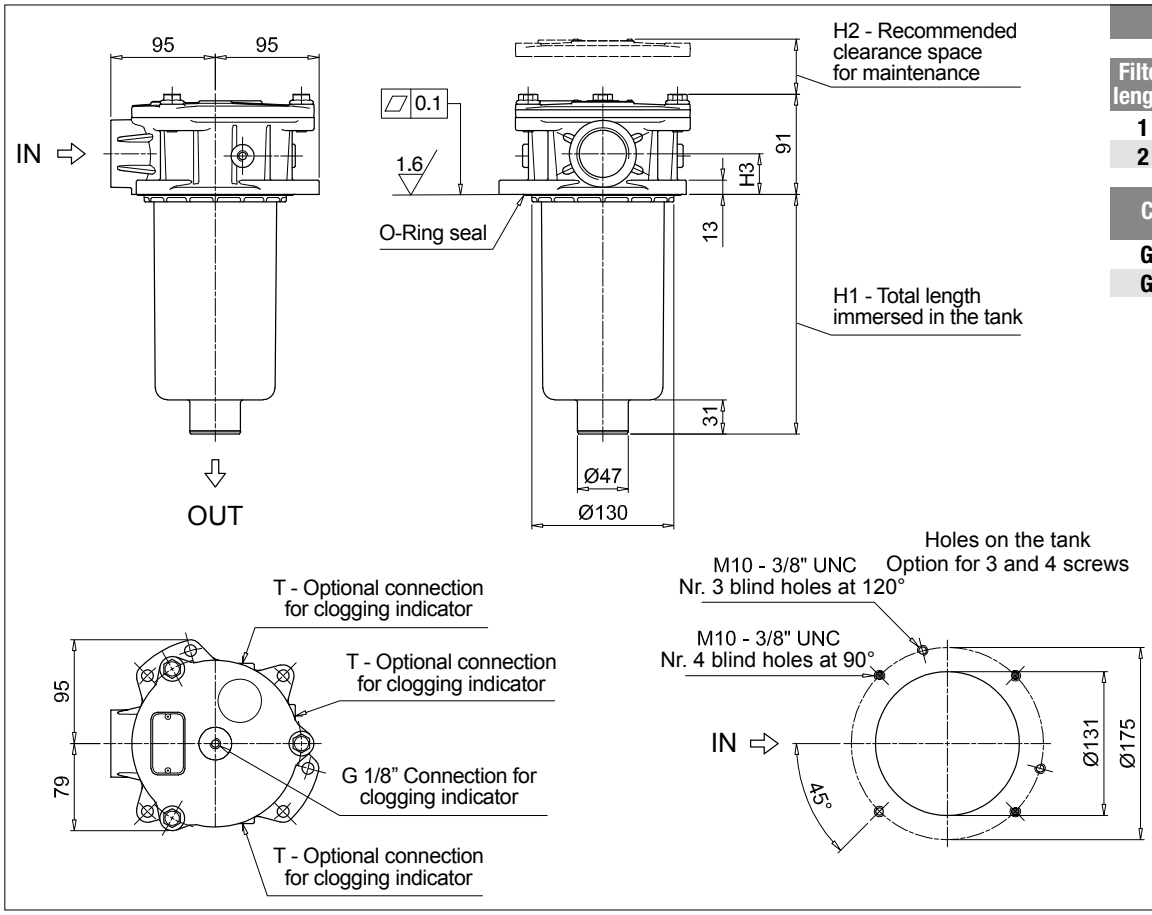

MPF181

Filter length	H1 [mm]	H2 [mm]
1	235	255
2	448	475

Connections	H3 [mm]
G1 - G4 - G7	35
G2 - G5 - G8	37

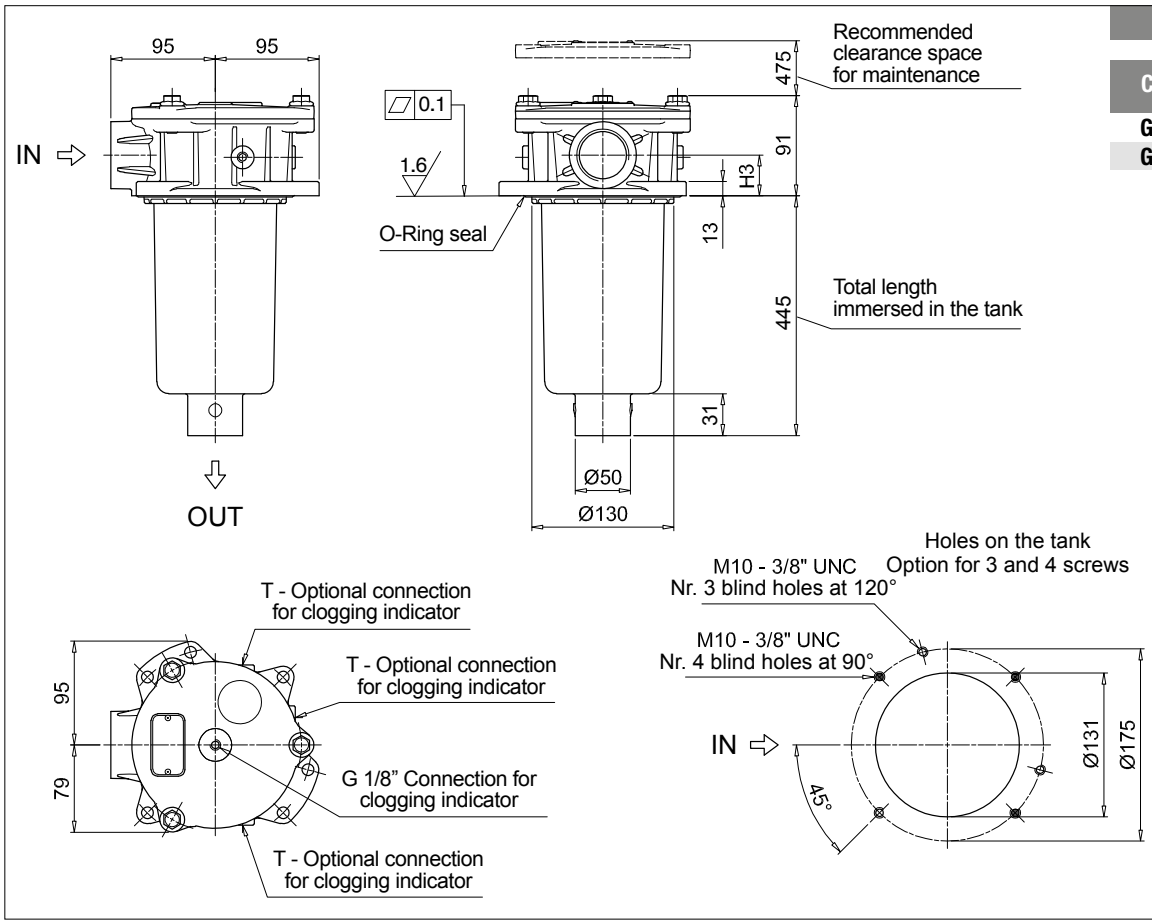

MPF191

Connections	H3 [mm]
G1 - G4 - G7	35
G2 - G5 - G8	37

MPF MPF182 - MPF192

Designation & Ordering code

COMPLETE FILTER

Configuration example 1:	MPF182	1	A	G1	1	A25	H	E	P01
Configuration example 2:	MPF192	2	V	G4	2	P10	N	B	P01

Series and size

MPF182 | **MPF192** Filter element with standard spigot

Length	Size 182	Size 192
1	•	-
2	•	•

Seals and treatments

A	NBR		**B**	NBR	flat seal on head
V	FPM		**D**	FPM	flat seal on head
W	NBR	head anodized	**L**	NBR	head anodized, flat seal on head
Z	FPM	head anodized	**M**	FPM	head anodized, flat seal on head

Main Connections		Aux size 1	Aux size 2
G1	G 1 1/4"	G 1/2"	G 3/4"
G4	1 1/4" NPT	1/2" NPT	3/4" NPT
G7	SAE 20 - 1 5/8" - 12 UN	SAE 8 - 3/16"- 16 UNF	SAE 12 - 1 1/16"- 12 UN

Aux connection - see previous table

1	Aux size 1	**2**	Aux size 2

Filtration rating (filter media)

A03	Inorganic microfiber 3 µm	**M25**	Wire mesh 25 µm
A06	Inorganic microfiber 6 µm	**M60**	Wire mesh 60 µm
A10	Inorganic microfiber 10 µm	**M90**	Wire mesh 90 µm
A16	Inorganic microfiber 16 µm	**P10**	Resin impregnated paper 10 µm
A25	Inorganic microfiber 25 µm	**P25**	Resin impregnated paper 25 µm

Element Δp		Filter media Axx	Mxx	Pxx
N	10 bar	-	•	•
H	10 bar	•	-	-

Bypass valve	
E	3 bar
B	1.75 bar

Execution	
P01	MP Filtri standard
Pxx	Customized

FILTER ELEMENT

Configuration example 1:	MF180	1	A25	H	B	E	P01
Configuration example 2:	MF190	2	P10	N	V		P01

Element series and size

MF180 | **MF190** Filter element with standard spigot

Element length	Size 180	Size 190
1	•	-
2	•	•

Filtration rating (filter media)

A03	Inorganic microfiber 3 µm	**M25**	Wire mesh 25 µm
A06	Inorganic microfiber 6 µm	**M60**	Wire mesh 60 µm
A10	Inorganic microfiber 10 µm	**M90**	Wire mesh 90 µm
A16	Inorganic microfiber 16 µm	**P10**	Resin impregnated paper 10 µm
A25	Inorganic microfiber 25 µm	**P25**	Resin impregnated paper 25 µm

Element Δp		Filter media Axx	Mxx	Pxx
N	10 bar	-	•	•
H	10 bar	•	-	-

Seals	
B	NBR
V	FPM

Bypass valve	
E	3 bar
-	1.75 bar

Execution	
P01	MP Filtri standard
Pxx	Customized

CLOGGING INDICATORS

See page 710-711

BVA	Axial pressure gauge	**BEA**	Electrical pressure indicator
BVR	Radial pressure gauge	**BEM**	Electrical pressure indicator
BVP	Visual pressure indicator with automatic reset	**BLA**	Electrical / visual pressure indicator
BVQ	Visual pressure indicator with manual reset		

ADDITIONAL FEATURES

See page 266

TE	Extension tube
Sxx	Extension tube
T5	Filler plug M30x1.5

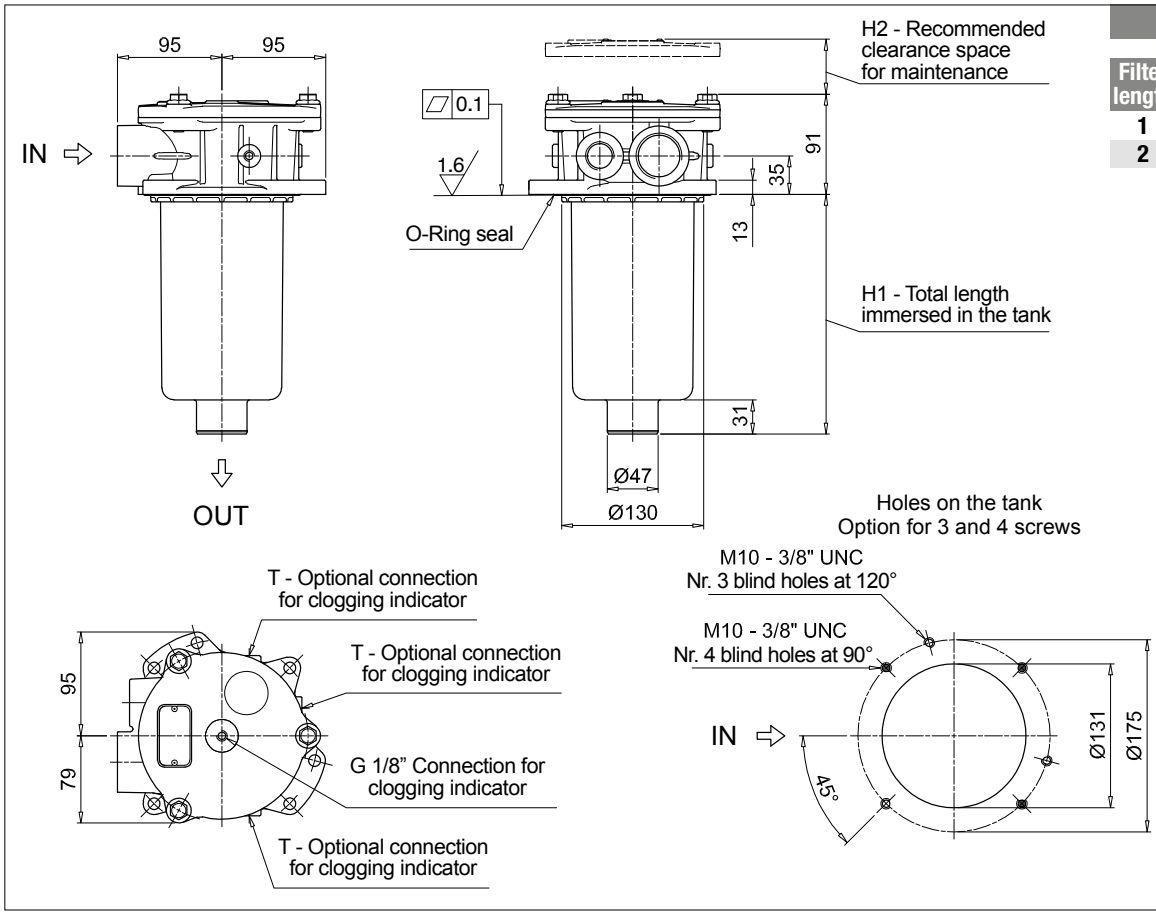

MPF182

Filter length	H1 [mm]	H2 [mm]
1	235	255
2	448	475

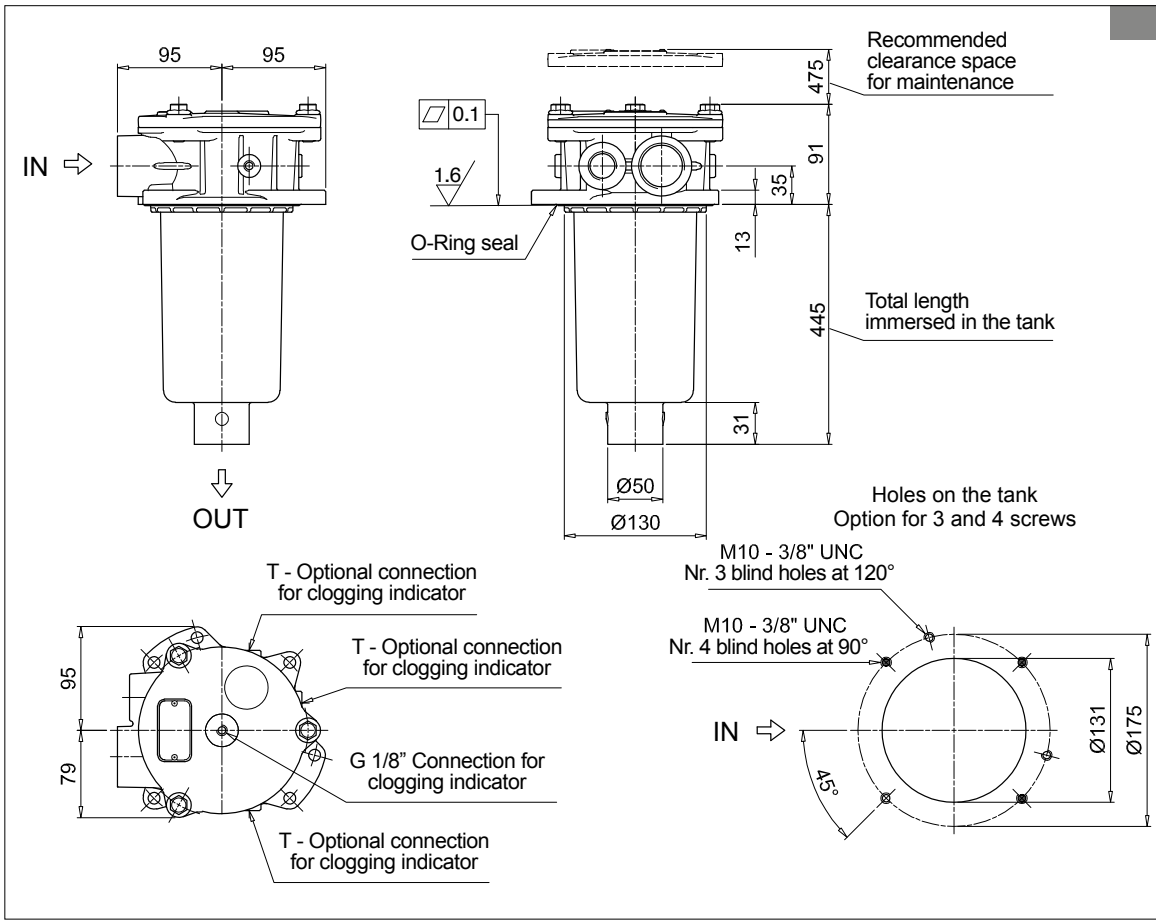

MPF192

MPF MPF184 - MPF194

Designation & Ordering code

COMPLETE FILTER

Configuration example 1:	MPF184	1	A	G1	A25	H	E	P01
Configuration example 2:	MPF194	2	V	F3	P10	N	B	P01

Series and size

MPF184 | **MPF194** Filter element with standard spigot

Length	Size 184	Size 194
1	•	-
2	•	•

Seals and treatments

A	NBR		**W**	NBR	head anodized
V	FPM		**Z**	FPM	head anodized

Main Connections		Rear connections
G1	G 1 1/4"	-
G2	G 1 1/4"	G 1 1/4"
G4	1 1/4" NPT	-
G5	1 1/4" NPT	1 1/4" NPT
G7	SAE 20 - 1 5/8" - 12 UN	-
G8	SAE 20 - 1 5/8" - 12 UN	SAE 20 - 1 5/8" - 12 UN
G10	SAE 24 - 1 7/8" - 12 UN	-
G11	SAE 24 - 1 7/8" - 12 UN	SAE 20 - 1 5/8" - 12 UN

Main Connections		Rear connections
G13	G 1 1/2"	-
G14	G 1 1/2"	G 1 1/4"
G15	1 1/2" NPT	-
G16	1 1/2" NPT	1 1/4" NPT
F1	1 1/2" SAE 3000 psi/M	-
F2	1 1/2" SAE 3000 psi/UNC	-
F3	1 1/2" SAE 3000 psi/M	1 1/2" SAE 3000 psi/M
F4	1 1/2" SAE 3000 psi/UNC	1 1/2" SAE 3000 psi/UNC

Filtration rating (filter media)

A03	Inorganic microfiber	3 µm	**M25**	Wire mesh	25 µm
A06	Inorganic microfiber	6 µm	**M60**	Wire mesh	60 µm
A10	Inorganic microfiber	10 µm	**M90**	Wire mesh	90 µm
A16	Inorganic microfiber	16 µm	**P10**	Resin impregnated paper	10 µm
A25	Inorganic microfiber	25 µm	**P25**	Resin impregnated paper	25 µm

Element Δp		Filter media Axx	Mxx	Pxx
N	10 bar	-	•	•
H	10 bar	•	-	-

Bypass valve	
E	3 bar
B	1.75 bar

Execution	
P01	MP Filtri standard
Pxx	Customized

FILTER ELEMENT

Configuration example 1:	MF180	1	A25	H	B	E	P01
Configuration example 2:	MF190	2	P10	N	V		P01

Element series and size

MF180 | **MF190** Filter element with standard spigot

Element length	Size 180	Size 190
1	•	
2	•	•

Filtration rating (filter media)

A03	Inorganic microfiber	3 µm	**M25**	Wire mesh	25 µm
A06	Inorganic microfiber	6 µm	**M60**	Wire mesh	60 µm
A10	Inorganic microfiber	10 µm	**M90**	Wire mesh	90 µm
A16	Inorganic microfiber	16 µm	**P10**	Resin impregnated paper	10 µm
A25	Inorganic microfiber	25 µm	**P25**	Resin impregnated paper	25 µm

Element Δp		Filter media Axx	Mxx	Pxx
N	10 bar	-	•	•
H	10 bar	•	-	-

Seals	
B	NBR
V	FPM

Bypass valve	
E	3 bar
-	1.75 bar

Execution	
P01	MP Filtri standard
Pxx	Customized

CLOGGING INDICATORS

See page 710-711

BVA	Axial pressure gauge
BVR	Radial pressure gauge
BVP	Visual pressure indicator with automatic reset
BVQ	Visual pressure indicator with manual reset
BEA	Electrical pressure indicator
BEM	Electrical pressure indicator
BLA	Electrical / visual pressure indicator

ADDITIONAL FEATURES

See page 266

TE	Extension tube
Sxx	Extension tube
T5	Filler plug M30x1.5

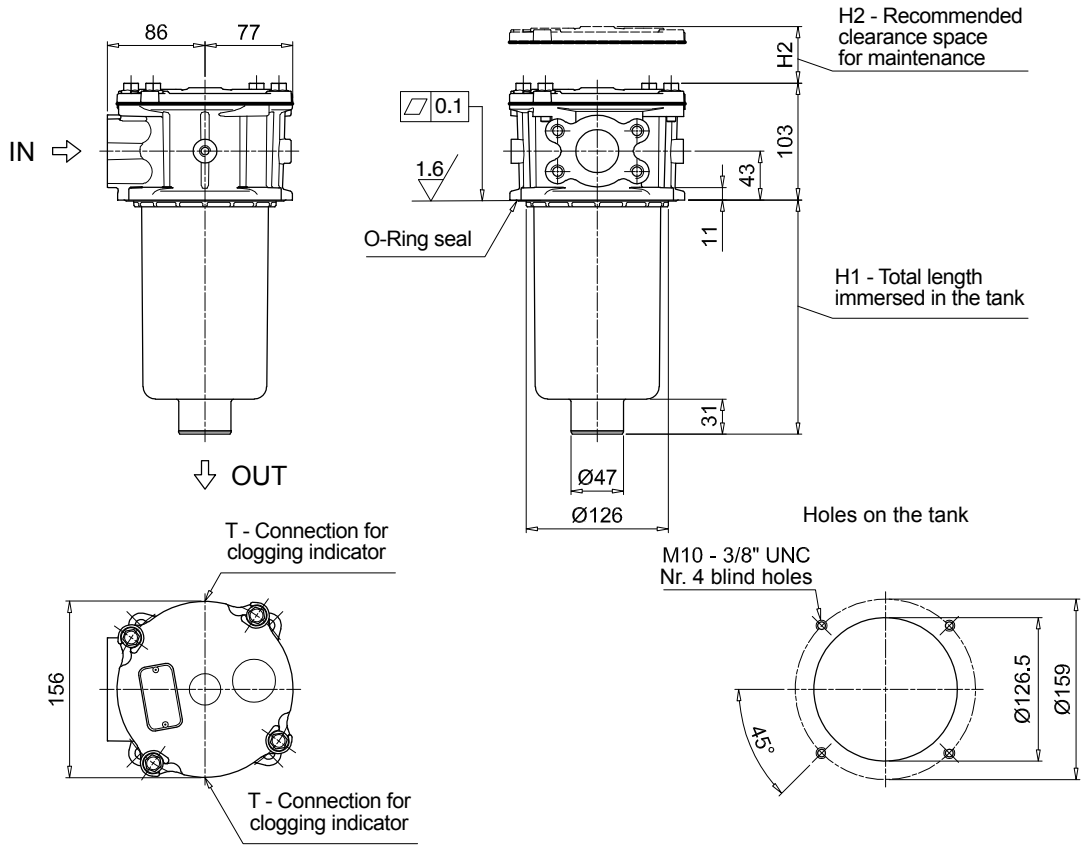

MPF184		
1 connection port		
Filter length	**H1 [mm]**	**H2 [mm]**
1	232	260
2	445	480

Connections	T
G1	G 1/8"
G4 - G7 - G10	1/8" NPT
G13	G 1/8"
G15 - F1 - F2	1/8" NPT

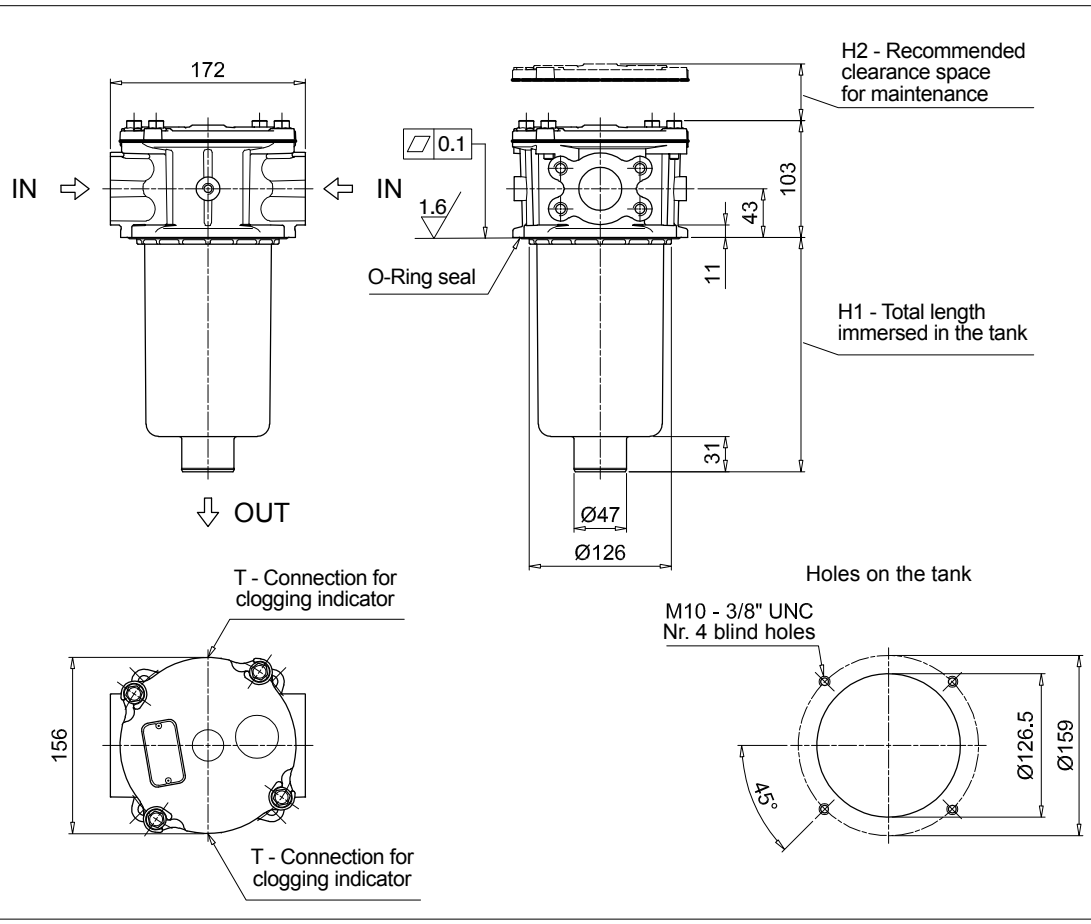

MPF184		
2 connection ports		
Filter length	**H1 [mm]**	**H2 [mm]**
1	232	260
2	445	480

Connections	T
G2	G 1/8"
G5 - G8 - G11	1/8" NPT
G14	G 1/8"
G16 - F3 - F4	1/8" NPT

Dimensions

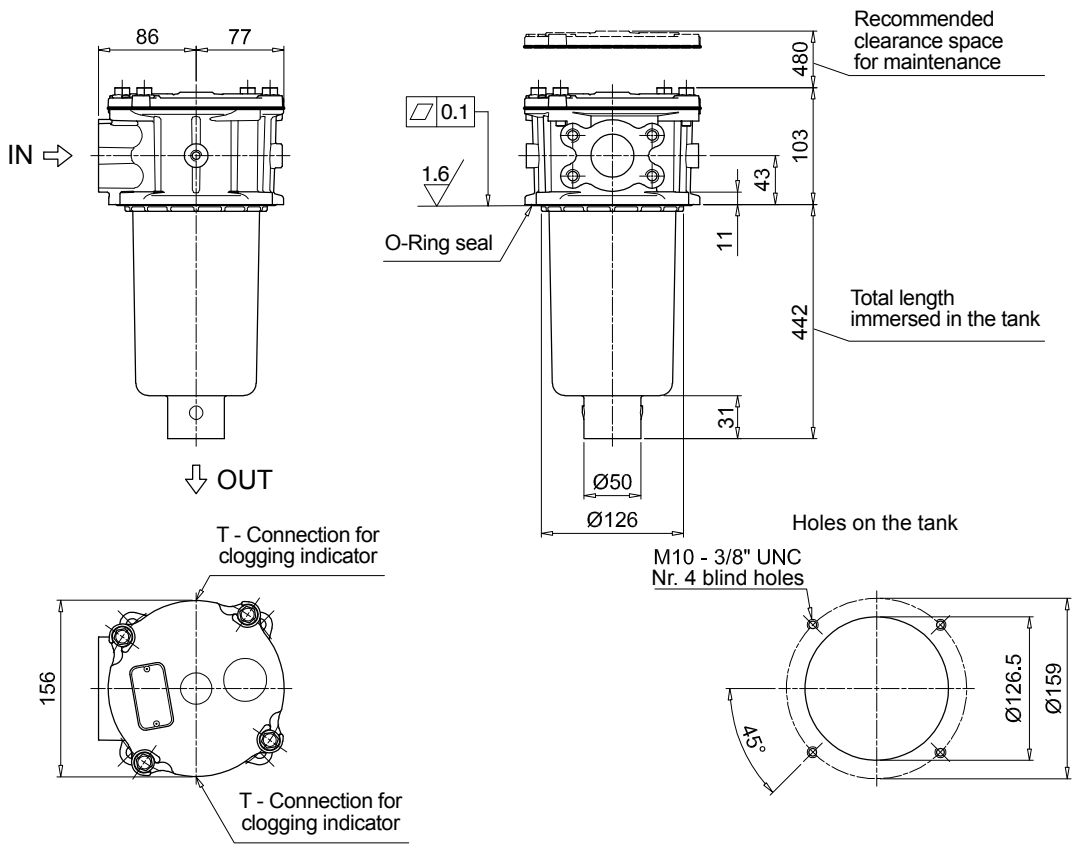

MPF194	
1 connection port	
Connections	**T**
G1	G 1/8"
G4 - G7 - G10	1/8" NPT
G13	G 1/8"
G15 - F1 - F2	1/8" NPT

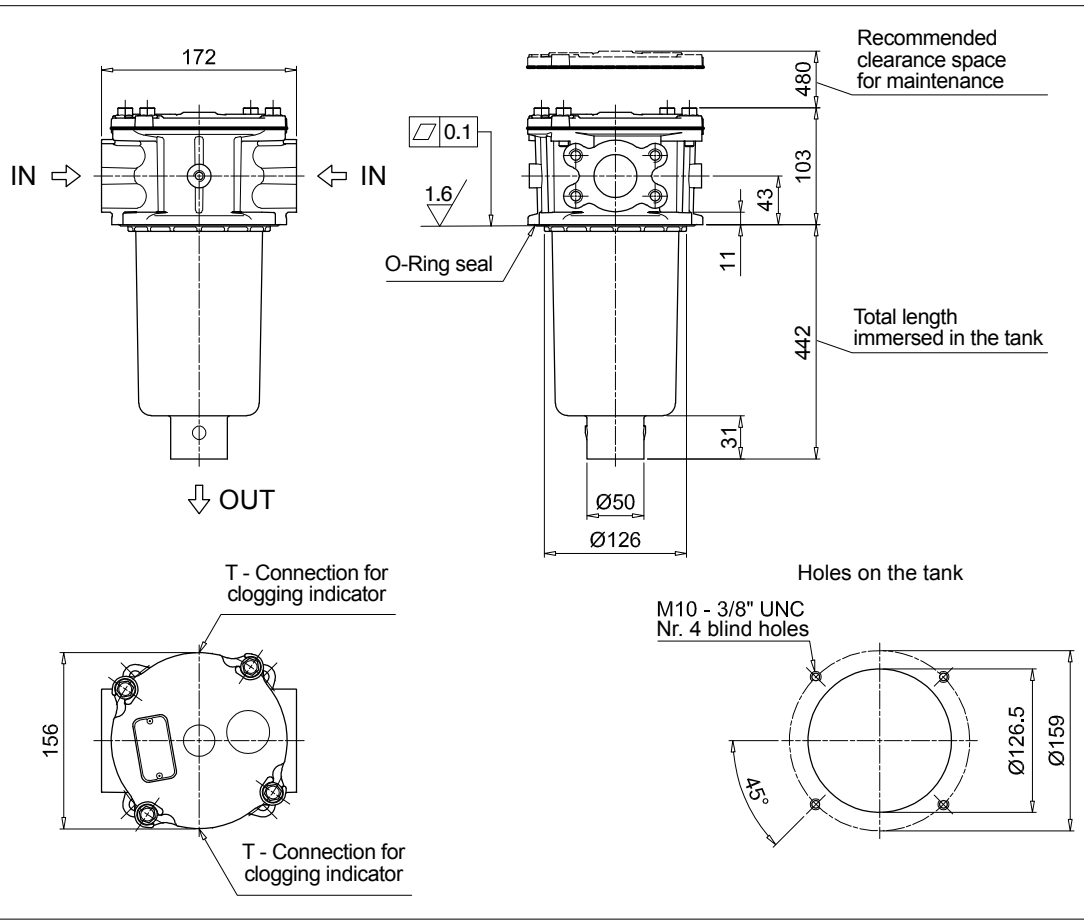

MPF194	
2 connection ports	
Connections	**T**
G2	G 1/8"
G5 - G8 - G11	1/8" NPT
G14	G 1/8"
G16 - F3 - F4	1/8" NPT

Designation & Ordering code

COMPLETE FILTER

Configuration example 1:	MPF400	1	A	G9	A25	H	B	P01
Configuration example 2:	MPF400	2	V	G4	P10	N	E	P01

Series and size

MPF400 Filter element with standard spigot

Length

1 | **2** | **3** |

Seals and treatments

A	NBR
V	FPM
W	NBR head anodized
Z	FPM head anodized

Connections

G1	G 1 1/4”	**G6**	2” NPT
G2	G 1 1/2”	**G7**	SAE 20 - 1 5/8” - 12 UN
G3	G 2”	**G8**	SAE 24 - 1 7/8” - 12 UN
G4	1 1/4” NPT	**G9**	SAE 32 - 2 1/2” - 12 UN
G5	1 1/2” NPT		

Filtration rating (filter media)

A03	Inorganic microfiber 3 µm	**M25**	Wire mesh 25 µm
A06	Inorganic microfiber 6 µm	**M60**	Wire mesh 60 µm
A10	Inorganic microfiber 10 µm	**M90**	Wire mesh 90 µm
A16	Inorganic microfiber 16 µm	**P10**	Resin impregnated paper 10 µm
A25	Inorganic microfiber 25 µm	**P25**	Resin impregnated paper 25 µm

Element Δp		Filter media Axx	Mxx	Pxx
N	10 bar	-	•	•
H	10 bar	•	-	-

Bypass valve	
E	3 bar
B	1.75 bar

Execution	
P01	MP Filtri standard
Pxx	Customized

FILTER ELEMENT

Configuration example 1:	MF400	1	A25	H	B		P01
Configuration example 2:	MF400	2	P10	N	V	E	P01

Element series and size

MF400 Filter element with standard spigot

Element length

1 | **2** | **3** |

Filtration rating (filter media)

A03	Inorganic microfiber 3 µm	**M25**	Wire mesh 25 µm
A06	Inorganic microfiber 6 µm	**M60**	Wire mesh 60 µm
A10	Inorganic microfiber 10 µm	**M90**	Wire mesh 90 µm
A16	Inorganic microfiber 16 µm	**P10**	Resin impregnated paper 10 µm
A25	Inorganic microfiber 25 µm	**P25**	Resin impregnated paper 25 µm

Element Δp		Filter media Axx	Mxx	Pxx
N	10 bar	-	•	•
H	10 bar	•	-	-

Seals	
B	NBR
V	FPM

Bypass valve	
E	3 bar
-	1.75 bar

Execution	
P01	MP Filtri standard
Pxx	Customized

CLOGGING INDICATORS

See page 710-711

BVA	Axial pressure gauge	**BEA**	Electrical pressure indicator
BVR	Radial pressure gauge	**BEM**	Electrical pressure indicator
BVP	Visual pressure indicator with automatic reset	**BLA**	Electrical / visual pressure indicator
BVQ	Visual pressure indicator with manual reset		

ADDITIONAL FEATURES

See page 266

Sxx	Extension tube
T5	Filler plug M30x1.5

MPF400			
Filter length	H1 [mm]	H2 [mm]	D [mm]
1	180	210	51
2	240	270	64
3	290	315	64

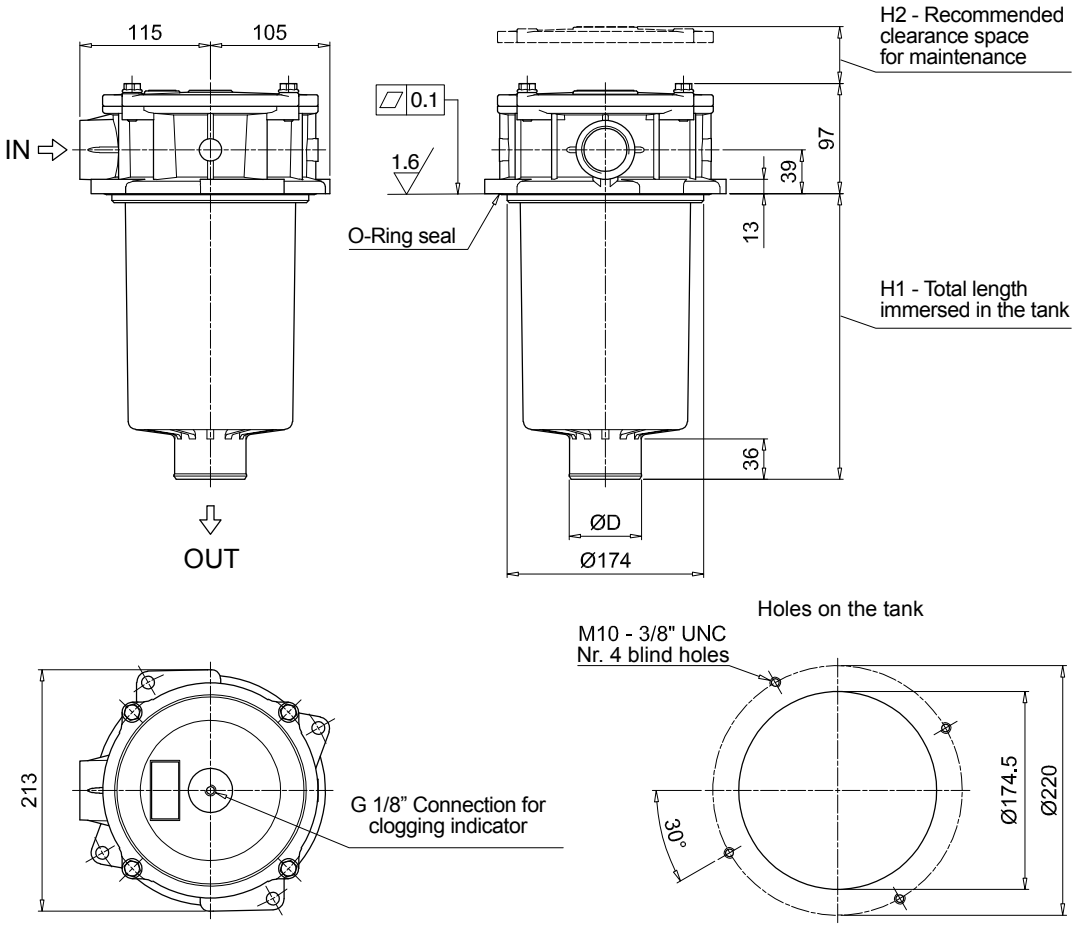

Designation & Ordering code

COMPLETE FILTER

Configuration example 1:	MPF410	1	A	G1	1	A25	H	B	P01
Configuration example 2:	MPF410	1	V	G4	1	P10	N	E	P01

Series and size

MPF410 Filter element with standard spigot

Length

1 | **2** | **3** |

Seals and treatments

A	NBR
V	FPM
W	NBR head anodized
Z	FPM head anodized

Main Connections		Aux size 1
G1	G 1 1/4"	G 1"
G4	1 1/4" NPT	1" NPT
G7	SAE 20 - 1 5/8" - 12 UN	SAE 16 - 1 5/16"- 12 UN

Aux connection - see previous table

1 Aux size 1

Filtration rating (filter media)

A03	Inorganic microfiber 3 µm	**M25**	Wire mesh 25 µm
A06	Inorganic microfiber 6 µm	**M60**	Wire mesh 60 µm
A10	Inorganic microfiber 10 µm	**M90**	Wire mesh 90 µm
A16	Inorganic microfiber 16 µm	**P10**	Resin impregnated paper 10 µm
A25	Inorganic microfiber 25 µm	**P25**	Resin impregnated paper 25 µm

Element Δp		Filter media Axx	Mxx	Pxx
N	10 bar	-	•	•
H	10 bar	•	-	-

Bypass valve	
E	3 bar
B	1.75 bar

Execution	
P01	MP Filtri standard
Pxx	Customized

FILTER ELEMENT

Configuration example 1:	MF400	1	A25	H	B		P01
Configuration example 2:	MF400	1	P10	N	V	E	P01

Element series and size

MF400 Filter element with standard spigot

Element length

1 | **2** | **3** |

Filtration rating (filter media)

A03	Inorganic microfiber 3 µm	**M25**	Wire mesh 25 µm
A06	Inorganic microfiber 6 µm	**M60**	Wire mesh 60 µm
A10	Inorganic microfiber 10 µm	**M90**	Wire mesh 90 µm
A16	Inorganic microfiber 16 µm	**P10**	Resin impregnated paper 10 µm
A25	Inorganic microfiber 25 µm	**P25**	Resin impregnated paper 25 µm

Element Δp		Filter media Axx	Mxx	Pxx
N	10 bar	-	•	•
H	10 bar	•	-	-

Seals	
B	NBR
V	FPM

Bypass valve	
E	3 bar
-	1.75 bar

Execution	
P01	MP Filtri standard
Pxx	Customized

CLOGGING INDICATORS

See page 710-711

BVA	Axial pressure gauge	**BEA**	Electrical pressure indicator
BVR	Radial pressure gauge	**BEM**	Electrical pressure indicator
BVP	Visual pressure indicator with automatic reset	**BLA**	Electrical / visual pressure indicator
BVQ	Visual pressure indicator with manual reset		

ADDITIONAL FEATURES

See page 266

Sxx	Extension tube
T5	Filler plug M30x1.5

MPF410			
Filter length	H1 [mm]	H2 [mm]	D [mm]
1	180	210	51
2	240	270	64
3	290	315	64

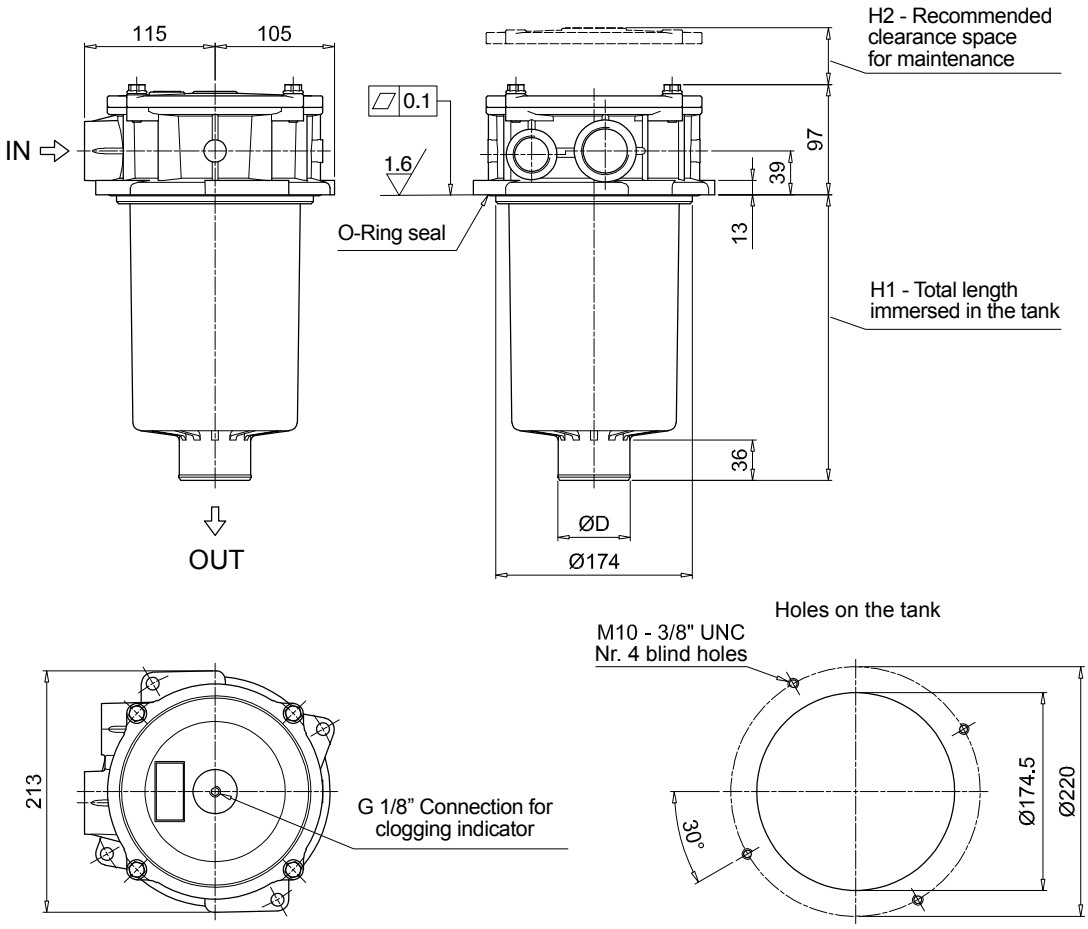

MPF MPF450 - MPF451 - MPF750

Designation & Ordering code

COMPLETE FILTER

Configuration example 1:	MPF450	1	A	G1	A25	H	B	P01
Configuration example 2:	MPF750	1	V	F2	P10	N	E	P01

Series and size

MPF450 | **MPF451** | **MPF750** Filter element with standard spigot

Length	MPF 450	MPF 451	MPF 750
1	•	•	•
2	•	•	-
3	•	•	-

Seals and treatments

A	NBR		**W**	NBR	head anodized
V	FPM		**Z**	FPM	head anodized

Connections		Aux (only size 451)
G1	G 2”	G 3/4”
G4	2” NPT	3/4” NPT
G7	SAE 32 - 2 1/2” - 12 UN	SAE 12 - 1 1/16” - 12 UN
F1	2” SAE 3000 psi/M	G 3/4”
F2	2” SAE 3000 psi/UNC	3/4” NPT

Filtration rating (filter media)

A03	Inorganic microfiber	3 µm	**M25**	Wire mesh	25 µm
A06	Inorganic microfiber	6 µm	**M60**	Wire mesh	60 µm
A10	Inorganic microfiber	10 µm	**M90**	Wire mesh	90 µm
A16	Inorganic microfiber	16 µm	**P10**	Resin impregnated paper	10 µm
A25	Inorganic microfiber	25 µm	**P25**	Resin impregnated paper	25 µm

Element Δp		Filter media Axx	Mxx	Pxx
N	10 bar	-	•	•
H	10 bar	•	-	-

Bypass valve	
E	3 bar
B	1.75 bar

Execution	
P01	MP Filtri standard
Pxx	Customized

FILTER ELEMENT

Configuration example 1:	MF400	1	A25	H	B		P01
Configuration example 2:	MF750	1	P10	N	V	E	P01

Element series and size

MF400 | **MF750** Filter element with standard spigot

Element length	MPF 450	MPF 451	MPF 750
1	•	•	•
2	•	•	-
3	•	•	-

Filtration rating (filter media)

A03	Inorganic microfiber	3 µm	**M25**	Wire mesh	25 µm
A06	Inorganic microfiber	6 µm	**M60**	Wire mesh	60 µm
A10	Inorganic microfiber	10 µm	**M90**	Wire mesh	90 µm
A16	Inorganic microfiber	16 µm	**P10**	Resin impregnated paper	10 µm
A25	Inorganic microfiber	25 µm	**P25**	Resin impregnated paper	25 µm

Element Δp		Filter media Axx	Mxx	Pxx
N	10 bar	-	•	•
H	10 bar	•	-	-

Seals	
B	NBR
V	FPM

Bypass valve	
E	3 bar
-	1.75 bar

Execution	
P01	MP Filtri standard
Pxx	Customized

CLOGGING INDICATORS

See page 710-711

BVA	Axial pressure gauge	**BEA**	Electrical pressure indicator
BVR	Radial pressure gauge	**BEM**	Electrical pressure indicator
BVP	Visual pressure indicator with automatic reset	**BLA**	Electrical / visual pressure indicator
BVQ	Visual pressure indicator with manual reset		

ADDITIONAL FEATURES

See page 266

Sxx	Extension tube
T5	Filler plug M30x1.5

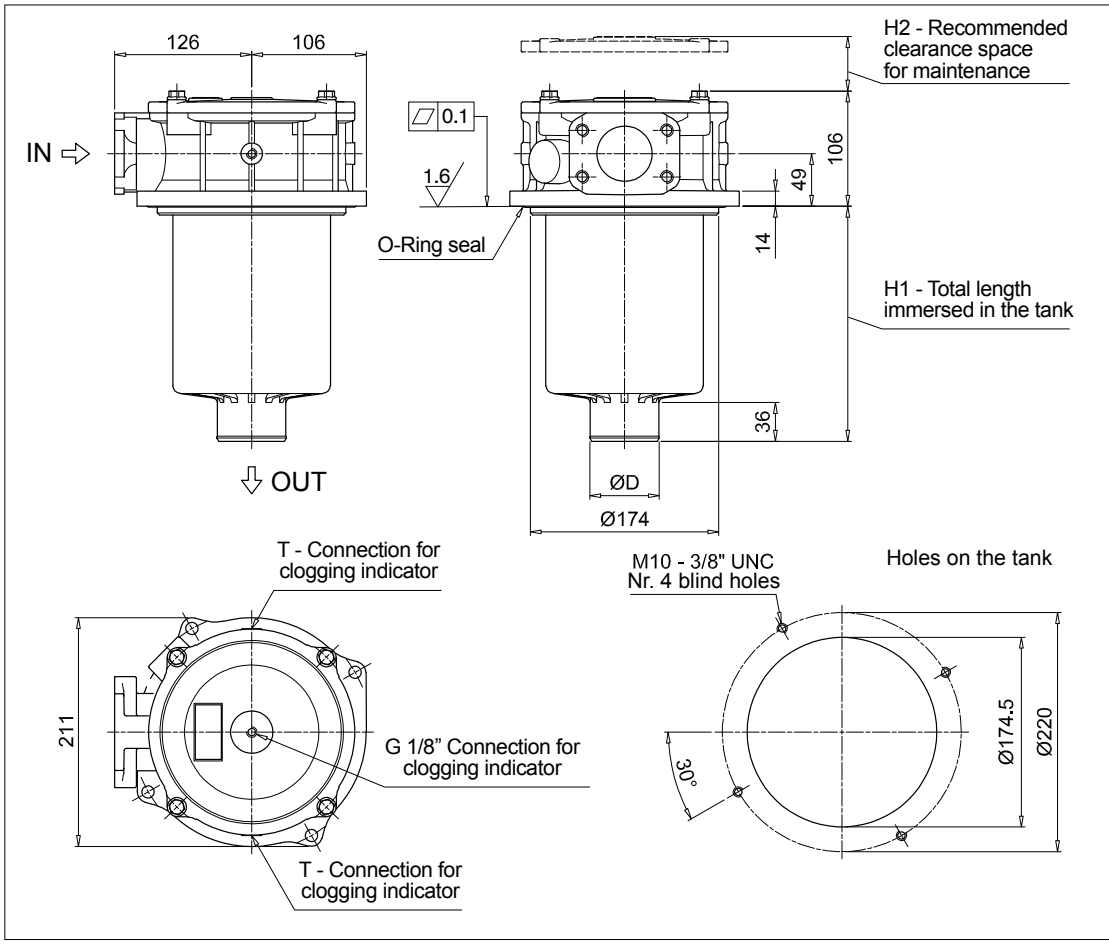

MPF450

Filter length	H1 [mm]	H2 [mm]	D [mm]
1	180	210	51
2	240	270	64
3	290	315	64

Connections	T
G1	G 1/8"
G4 - G7	1/8" NPT
F1	G 1/8"
F2	1/8" NPT

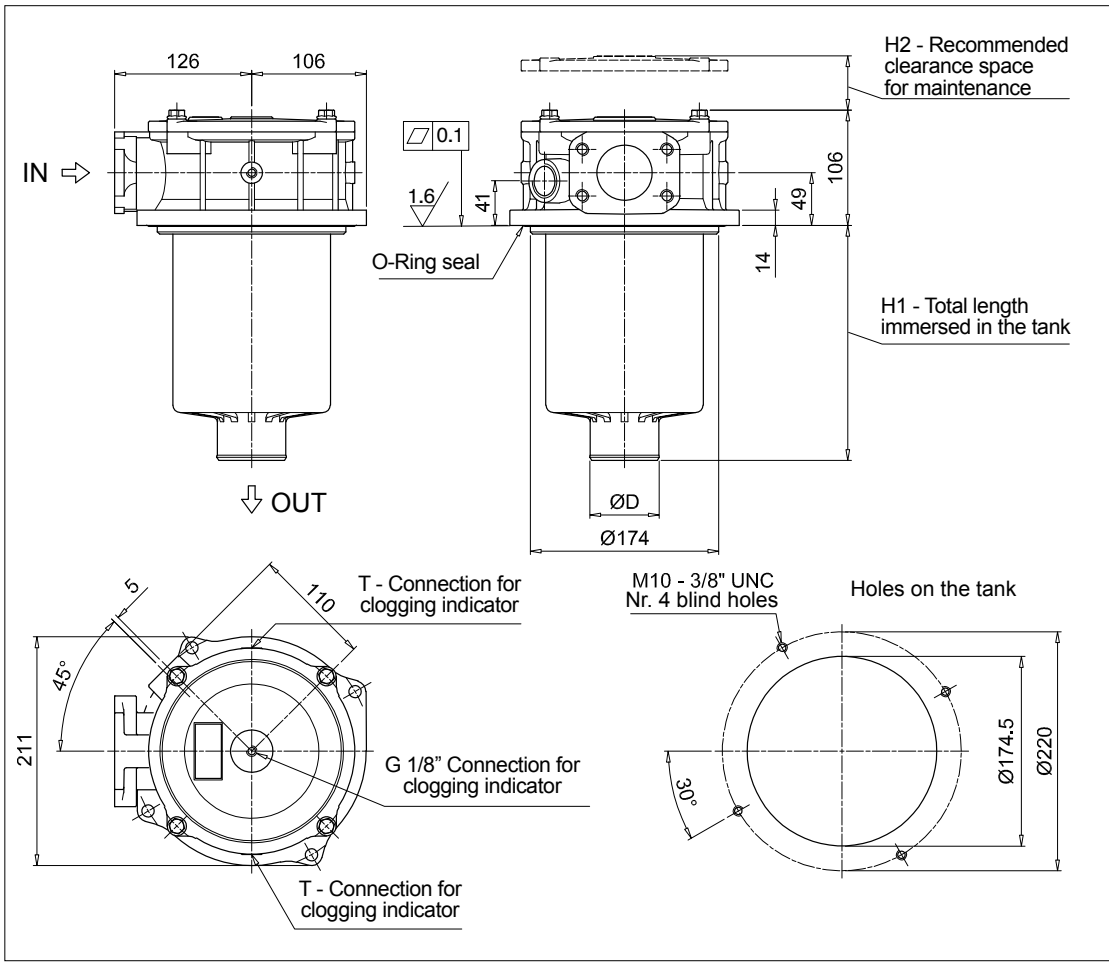

MPF451

Filter length	H1 [mm]	H2 [mm]	D [mm]
1	180	210	51
2	240	270	64
3	290	315	64

Connections	T
G1	G 1/8"
G4 - G7	1/8" NPT
F1	G 1/8"
F2	1/8" NPT

Dimensions

MPF750

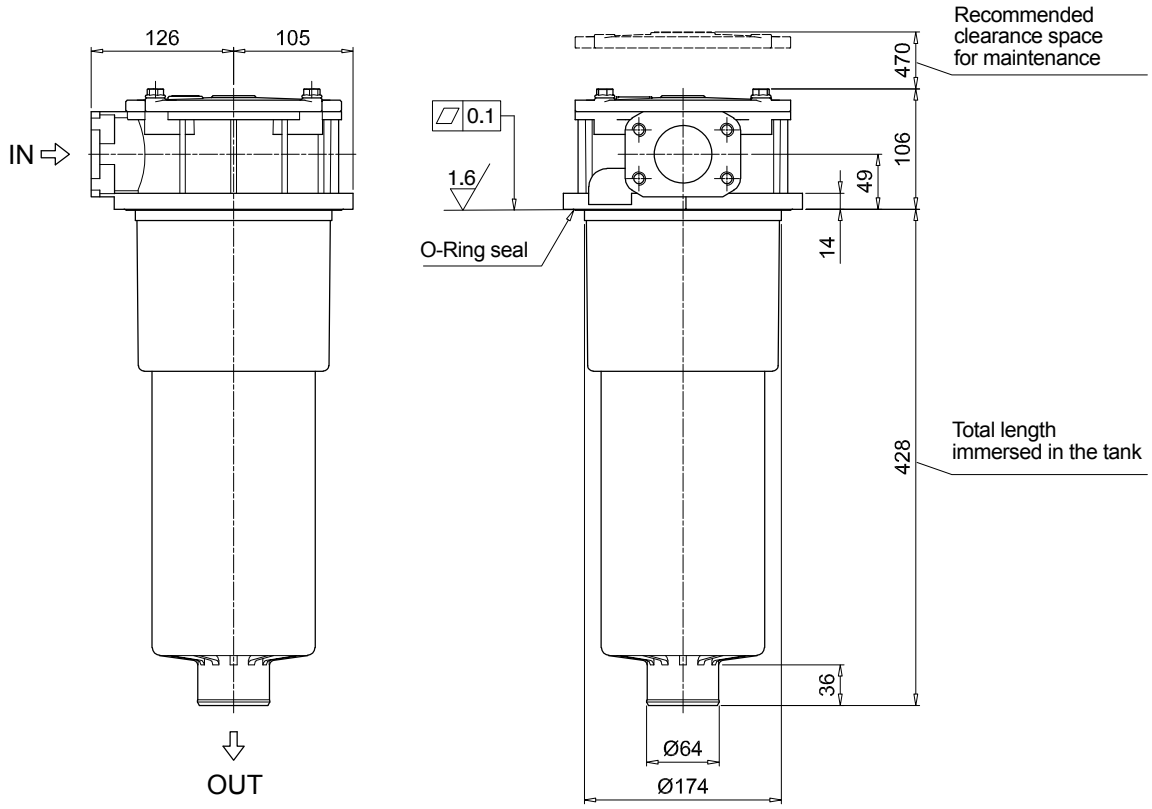

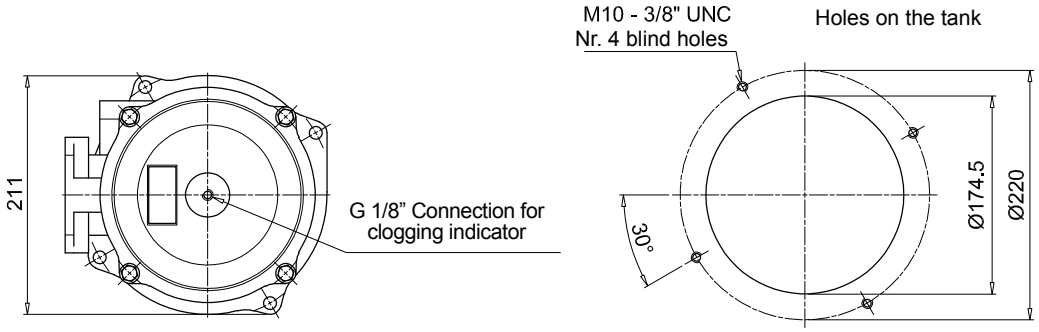

Order number for spare parts

MPF 100

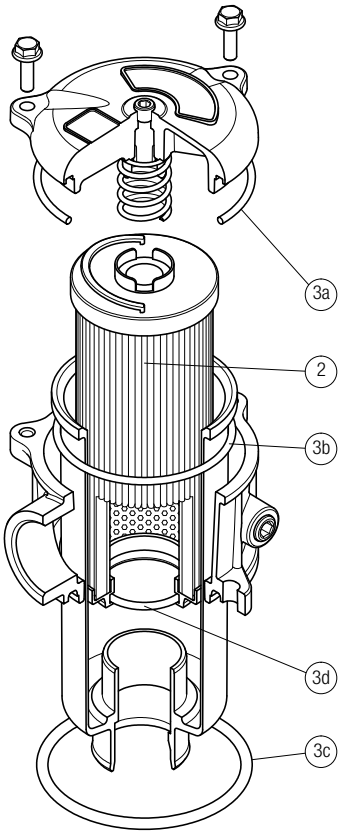

MPF 181

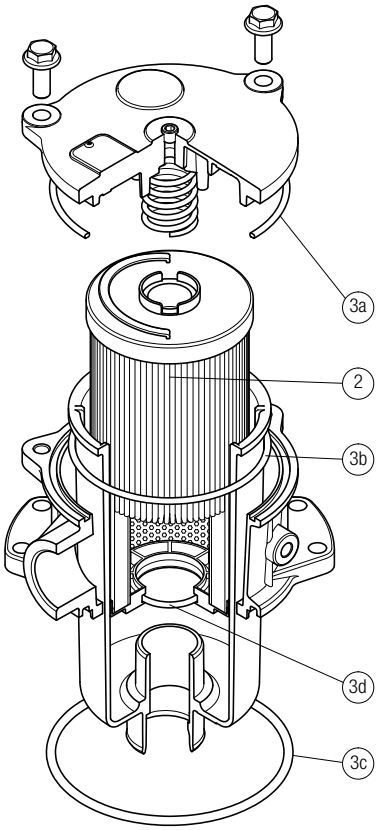

O-RING SEAL

Item:	Q.ty: 1 pc. 2	Q.ty: 1 pc. 3 (3a ÷ 3d)	
Filter series	**Filter element**	**Seal Kit code number NBR**	**FPM**
MPF 030	See order table	02050055	02050056
MPF 100-110		02050057	02050058
MPF 181-182		02050059	02050060
MPF 184		02050455	02050456
MPF 191-192		02050457	02050458
MPF 194		02050459	02050460
MPF 400-410		02050061	02050062
MPF 450-451		02050461	02050462
MPF 750		02050106	02050107

MPF 104

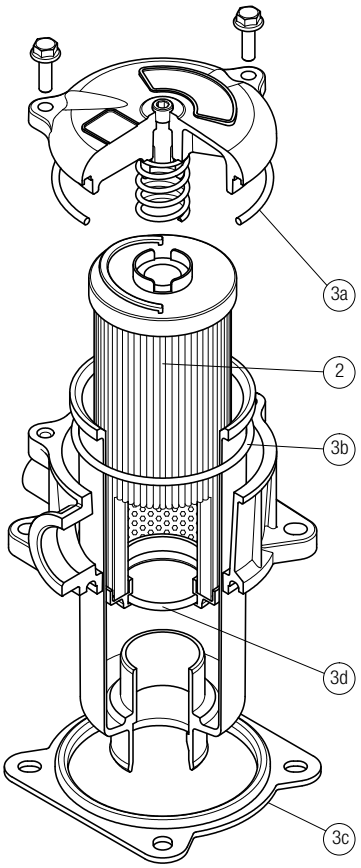

MPF 181

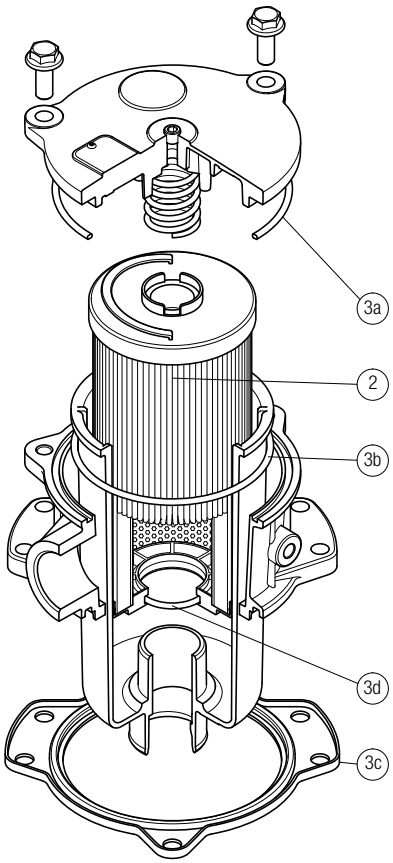

FLAT SEAL

Item:	Q.ty: 1 pc. 2	Q.ty: 1 pc. 3 (3a ÷ 3d)	
Filter series	**Filter element**	**Seal Kit code number NBR**	**FPM**
MPF 020	See order table	02050438	02050439
MPF 104		02050350	02050408
MPF 181-182		02050659	02050660
MPF 191-192		02050661	02050662

MPT series

Maximum working pressure up to 800 kPa (8 bar) - Flow rate up to 300 l/min

MPT GENERAL INFORMATION

Description

Return filter

Maximum working pressure up to 800 kPa (8 bar)
Flow rate up to 300 l/min

MPT is a range of return filters with integrated breather filter, for protection of the reservoir against the system contamination.
They are directly fixed to the reservoir, in immersed or semi-immersed position.
The filter output must be always immersed into the fluid to avoid aeration or foam generation into the reservoir.

Available features:
- Female threaded connections up to 1 1/4", for a maximum flow rate of 300 l/min
- Multiple connections, to connect several return lines or drains
- Fine filtration rating, to get a good cleanliness level into the reservoir
- Bypass valve integrated into the filter element, to relieve excessive pressure drop across the filter media
- 2, 3 or 6 fixing holes for installation, to suit a variety of reservoir surfaces
- O-ring or Flat Seal to suit a variety of reservoir surfaces
- Screw-in cover with a special shape, to allow the filter element replacement without the use of specific tools
- Oil dipstick, to easily check the level of the fluid into the reservoir (sold as separate item)
- Extension tube, to be used in deep reservoirs (sold as separate item)
- Diffuser, to reduce the risk of aeration, foaming and noise (sold as separate item)
- Integrated breather filter, to clean the air that moves into the reservoir as result of the oil level fluctuation
- Integrated breather filter with pressurization valve, to clean the air that moves into the reservoir as result of the oil level fluctuation and to guarantee the pressurization into the reservoir
- Visual, electrical and electronic clogging indicators

Common applications:
- Light industrial equipment
- Mobile application

Technical data

Filter housing materials
- Head: Aluminium
- Cover: Polyamide
- Bowl: Polyamide

Bypass valve
- Opening pressure 175 kPa (1.75 bar) ±10%
- Opening pressure 300 kPa (3 bar) ±10%

Δp element type
- Microfibre filter elements - series H: 10 bar
- Fluid flow through the filter element from OUT to IN

Seals
- Standard NBR series A
- Optional FPM series V

Temperature
From -25 °C to +110 °C

Note
MPT filters are provided for vertical mounting

Weights [kg] and volumes [dm³]

Filter series	Weights [kg]				Volumes [dm³]			
	Length 1	2	3	4	Length 1	2	3	4
MPT 025	0.41	0.45	0.50	-	0.24	0.35	0.42	-
MPT 027	0.44	0.48	0.55	-	0.24	0.35	0.42	-
MPT 110	1.00	1.05	1.15	1.40	0.72	0.93	1.28	1.74
MPT 114	1.10	1.15	1.25	1.50	0.72	0.93	1.28	1.74
MPT 116	1.10	1.15	1.25	1.50	0.72	0.93	1.28	1.74
MPT 120	1.00	1.05	1.15	1.40	0.72	0.93	1.28	1.74

FILTER ASSEMBLY SIZING
Flow rates [l/min]

Filter series	Length	Filter element design - H series					Filter element design - N series		
		A03	A06	A10	A16	A25	M25 M60 M90	P10	P25
MPT 025-027	**1**	7	10	23	28	42	59	51	54
	2	17	20	45	48	56	72	64	67
	3	21	24	50	55	59	76	74	75
MPT 110-114 116-120	**1**	18	20	53	56	65	153	87	96
	2	28	38	65	75	95	158	111	123
	3	48	55	125	135	169	289	224	251
	4	79	89	180	185	198	306	264	289

Maximum flow rate for a complete return filter with a pressure drop Δp = 0.5 bar.
The reference fluid has a kinematic viscosity of 30 mm^2/s (cSt) and a density of 0.86 kg/dm^3.
For different pressure drop or fluid viscosity we recommend to use our selection software available on www.mpfiltri.com.
You can also calculate the right size using the formulas present on the FILTER SIZING paragraph at the beginning of the full catalogue or at the beginning of the filter family brochure.
Please, contact our Sales Department for further additional information.

Hydraulic symbols

Filter series	Style 1 connection	Style 2 connections	Style 3 connections
MPT 025	•	-	-
MPT 027	•	-	-
MPT 110	-	•	-
MPT 114	•	-	-
MPT 116	•	-	-
MPT 120	-	-	•

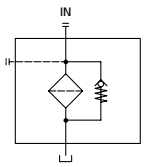

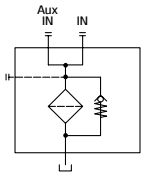

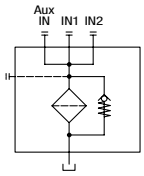

Pressure drop

Filter housings Δp pressure drop

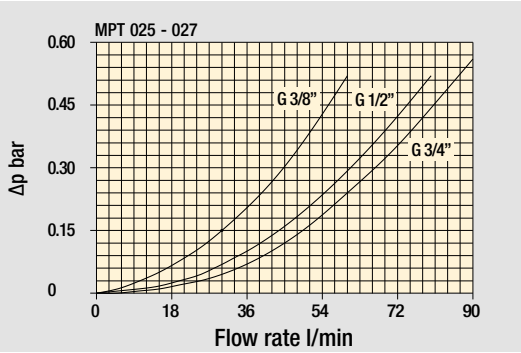

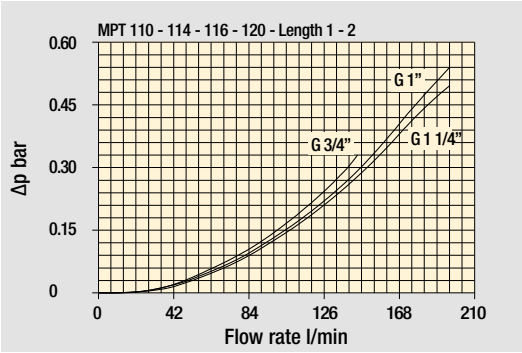

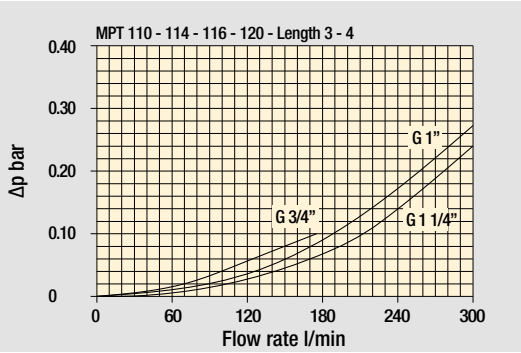

Bypass valve pressure drop

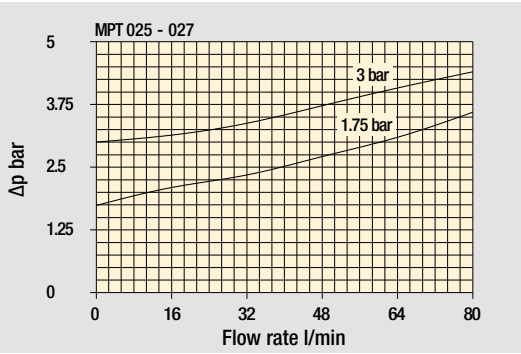

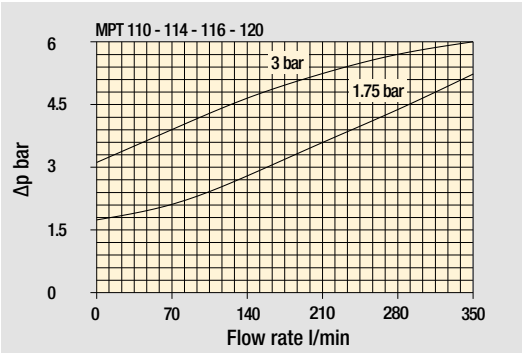

Air breather pressure drop

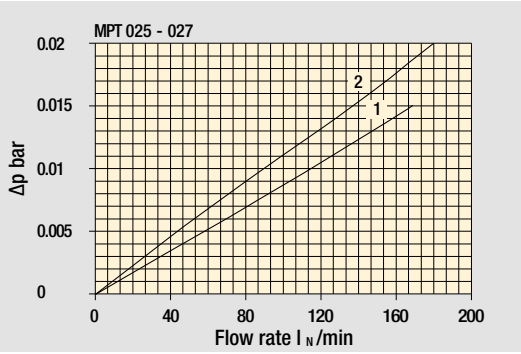

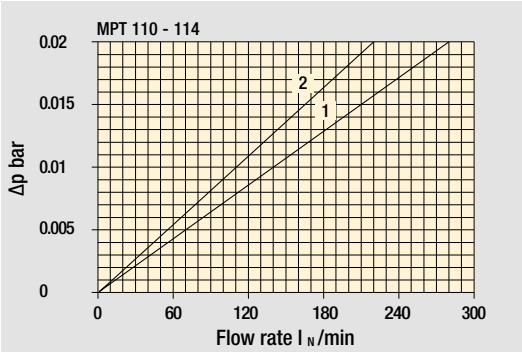

1 C With air breather 10 µm
2 D With anti-splash and SAP50 10 µm

The curves are plotted using mineral oil with density of 0.86 kg/dm³ in compliance with ISO 3968. Δp varies proportionally with density.

Multifunction

MPT 025 -027		
Air breather port plugged Indicator port	Air breather standard Indicator port	Anti-splash air breather & pressurized Double indicator port

Multiport - Multifunction

MPT 110	
Standard - Single IN Port	Double IN Port - Double indicator port
Double IN Port **Option:** double drain port	Double IN Port - Indicator port **Option:** drain port

MPT 120
Triple IN port **Option:** double drain port

MPT MPT025 - MPT027

Designation & Ordering code

COMPLETE FILTER

Configuration example 1:	MPT025	1	S	A	G3	A10	E	P01
Configuration example 2:	MPT027	3	C	W	G6	A03	B	P01

Series and size

MPT025 | **MPT027** Filter element with standard spigot

Length

1 | **2** | **3** |

Air breather

S	Without air breather
C	With air breather 10 µm
D	With anti-splash and air breather SAP050 10 µm
P	With anti-splash and air breather SAP050 10 µm, pressurization 0.5 bar

Seals and treatments		Filtration rating Axx	Mxx	Pxx
A	NBR	•	•	•
V	FPM	•	•	•
W	NBR head anodized	•	•	-
Z	FPM head anodized	•	•	-

Connections

G1	G 3/8”	**G6**	3/4” NPT
G2	G 1/2”	**G7**	SAE 6 - 9/16” - 18 UNF
G3	G 3/4”	**G8**	SAE 8 - 3/4” - 16 UNF
G4	3/8” NPT	**G9**	SAE 12 - 1 1/16” - 12 UN
G5	1/2” NPT		

Filtration rating (filter media)

A03	Inorganic microfiber 3 µm	**M25**	Wire mesh 25 µm
A06	Inorganic microfiber 6 µm	**M60**	Wire mesh 60 µm
A10	Inorganic microfiber 10 µm	**M90**	Wire mesh 90 µm
A16	Inorganic microfiber 16 µm	**P10**	Resin impregnated paper 10 µm
A25	Inorganic microfiber 25 µm	**P25**	Resin impregnated paper 25 µm

Bypass valve

E	3 bar
B	1.75 bar

Execution

P01	MP Filtri standard
Pxx	Customized

FILTER ELEMENT

Configuration example 1:	MF020	1	A10	H	B	E	P01
Configuration example 2:	MF020	3	A03	N	B		P01

Element series and size

MF020 Filter element with standard spigot

Element length

1 | **2** | **3** |

Filtration rating (filter media)

A03	Inorganic microfiber 3 µm	**M25**	Wire mesh 25 µm
A06	Inorganic microfiber 6 µm	**M60**	Wire mesh 60 µm
A10	Inorganic microfiber 10 µm	**M90**	Wire mesh 90 µm
A16	Inorganic microfiber 16 µm	**P10**	Resin impregnated paper 10 µm
A25	Inorganic microfiber 25 µm	**P25**	Resin impregnated paper 25 µm

Element Δp		Filter media Axx	Mxx	Pxx
N	10 bar	-	•	•
H	10 bar	•	-	-

Seals

B	NBR
V	FPM

Bypass valve

E	3 bar
-	1.75 bar

Execution

P01	MP Filtri standard
Pxx	Customized

CLOGGING INDICATORS

See page 710-711

BVA	Axial pressure gauge	**BEA**	Electrical pressure indicator
BVR	Radial pressure gauge	**BEM**	Electrical pressure indicator
BVP	Visual pressure indicator with automatic reset	**BLA**	Electrical / visual pressure indicator
BVQ	Visual pressure indicator with manual reset		

ADDITIONAL FEATURES

See page 266

TE	Extension tube
DPT	Dipstick

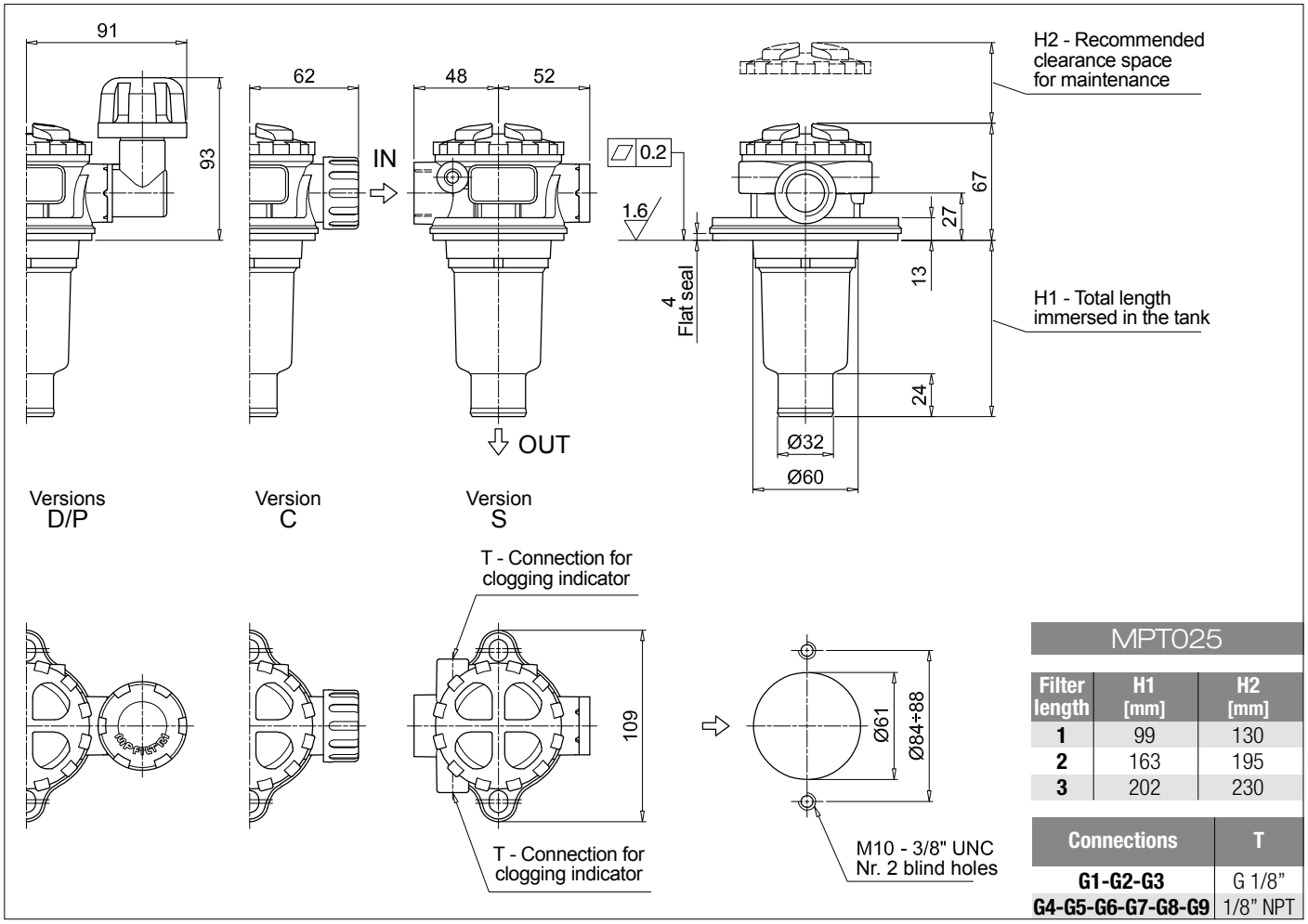

MPT025		
Filter length	**H1 [mm]**	**H2 [mm]**
1	99	130
2	163	195
3	202	230

Connections	T
G1-G2-G3	G 1/8”
G4-G5-G6-G7-G8-G9	1/8” NPT

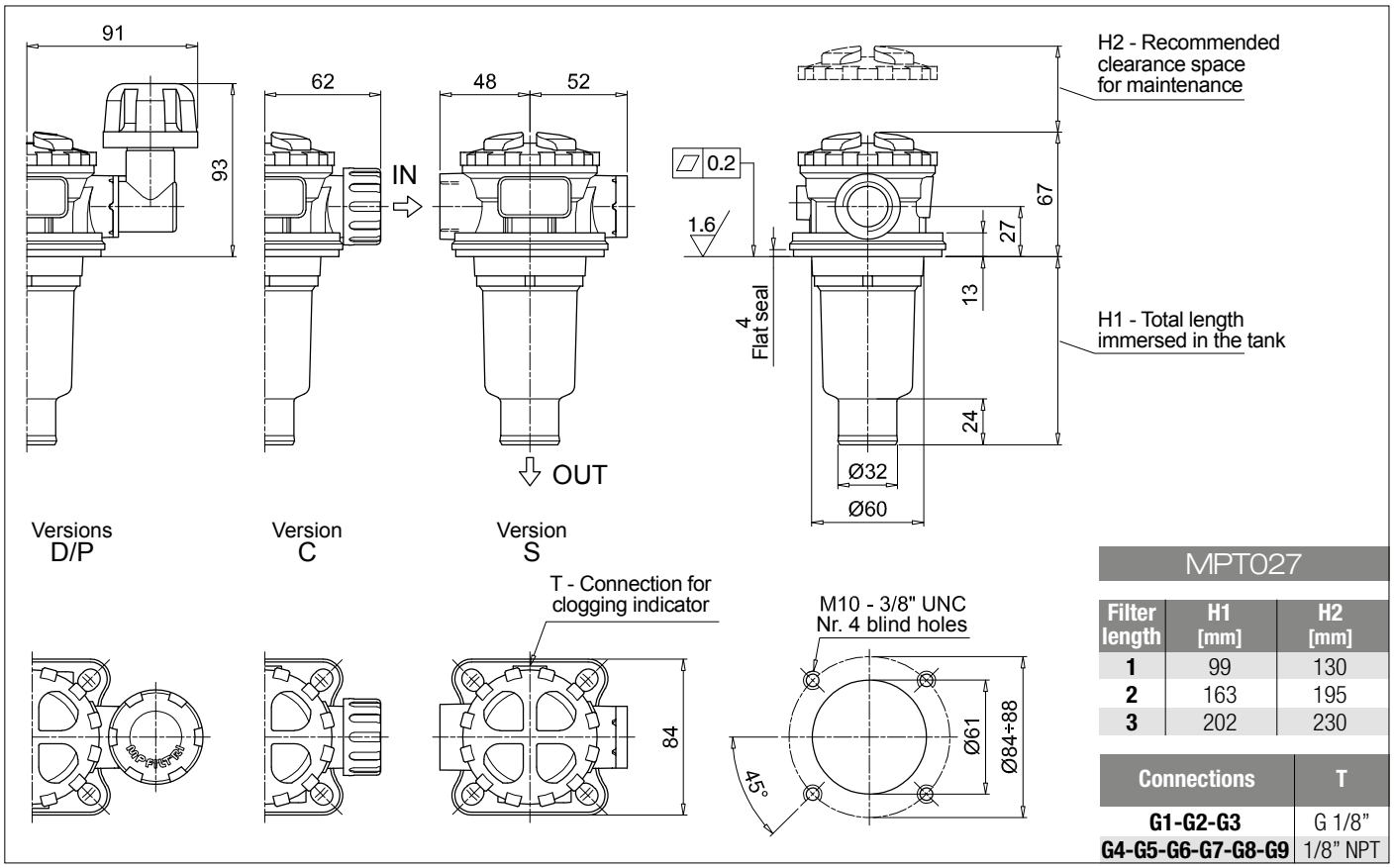

MPT027		
Filter length	**H1 [mm]**	**H2 [mm]**
1	99	130
2	163	195
3	202	230

Connections	T
G1-G2-G3	G 1/8”
G4-G5-G6-G7-G8-G9	1/8” NPT

MPT MPT110

Designation & Ordering code

COMPLETE FILTER

Configuration example 1:	MPT110	1	S	A	G1	0	A06	E	P01
Configuration example 2:	MPT110	3	P	V	G4	1	M25	B	P01

Series and size

MPT110 Filter element with standard spigot

Length

1 | **2** | **3** | **4** |

Air breather

S Without air breather
C With air breather 10 µm
D With anti-splash and air breather SAP050 10 µm
P With anti-splash and air breather SAP050 10 µm, pressurization 0.5 bar

Seals and treatments

		Filtration rating Axx	Mxx	Pxx
A	NBR	•	•	•
V	FPM	•	•	•
W	NBR head anodized	•	•	-
Z	FPM head anodized	•	•	-

Main Connections	Aux size 1	Aux size 2
G1 G 3/4"	G 3/8"	G 1/2"
G2 G 1"		
G3 G 1 1/4"		
G4 3/4" NPT	3/8" NPT	1/2" NPT
G5 1" NPT		

Main Connections	Aux size 1	Aux size 2
G6 1 1/4" NPT	3/8" NPT	1/2" NPT
G7 SAE 12 - 1 1/16" - 12 UN	SAE 6 - 9/16" - 18 UNF	SAE 8 - 3/4" - 16 UNF
G8 SAE 16 - 1 5/16" - 12 UN		
G9 SAE 20 - 1 5/8" - 12 UN		

Aux connection - see previous table

0 Not machined **1** Aux size 1 **2** Aux size 2

Filtration rating (filter media)

A03 Inorganic microfiber 3 µm
A06 Inorganic microfiber 6 µm
A10 Inorganic microfiber 10 µm
A16 Inorganic microfiber 16 µm
A25 Inorganic microfiber 25 µm
M25 Wire mesh 25 µm
M60 Wire mesh 60 µm
M90 Wire mesh 90 µm
P10 Resin impregnated paper 10 µm
P25 Resin impregnated paper 25 µm

Bypass valve

E 3 bar
B 1.75 bar

Execution

P01 MP Filtri standard
Pxx Customized

FILTER ELEMENT

Configuration example 1:	MF100	1	A06	H	B	E	P01
Configuration example 2:	MF100	3	M25	N	V		P01

Element series and size

MF100 Filter element with standard spigot

Element length

1 | **2** | **3** | **4** |

Filtration rating (filter media)

A03 Inorganic microfiber 3 µm
A06 Inorganic microfiber 6 µm
A10 Inorganic microfiber 10 µm
A16 Inorganic microfiber 16 µm
A25 Inorganic microfiber 25 µm
M25 Wire mesh 25 µm
M60 Wire mesh 60 µm
M90 Wire mesh 90 µm
P10 Resin impregnated paper 10 µm
P25 Resin impregnated paper 25 µm

Element Δp

		Filter media Axx	Mxx	Pxx
N	10 bar	-	•	•
H	10 bar	•	-	-

Seals

B NBR
V FPM

Bypass valve

E 3 bar
- 1.75 bar

Execution

P01 MP Filtri standard
Pxx Customized

CLOGGING INDICATORS

See page 710-711

BVA Axial pressure gauge
BVR Radial pressure gauge
BVP Visual pressure indicator with automatic reset
BVQ Visual pressure indicator with manual reset
BEA Electrical pressure indicator
BEM Electrical pressure indicator
BLA Electrical / visual pressure indicator

ADDITIONAL FEATURES

See page 266

TE Extension tube
DFS Diffuser with fast lock connection
DPT Dipstick

MPT110				
Filter length	H1 [mm]	H2 [mm]	D [mm]	l [mm]
1	97	120	38	4
2	144	170	38	4
3	222	250	47	-
4	324	350	47	2.5

Connections	T
G1-G2-G3	G 1/8”
G4-G5-G6-G7-G8-G9	1/8” NPT

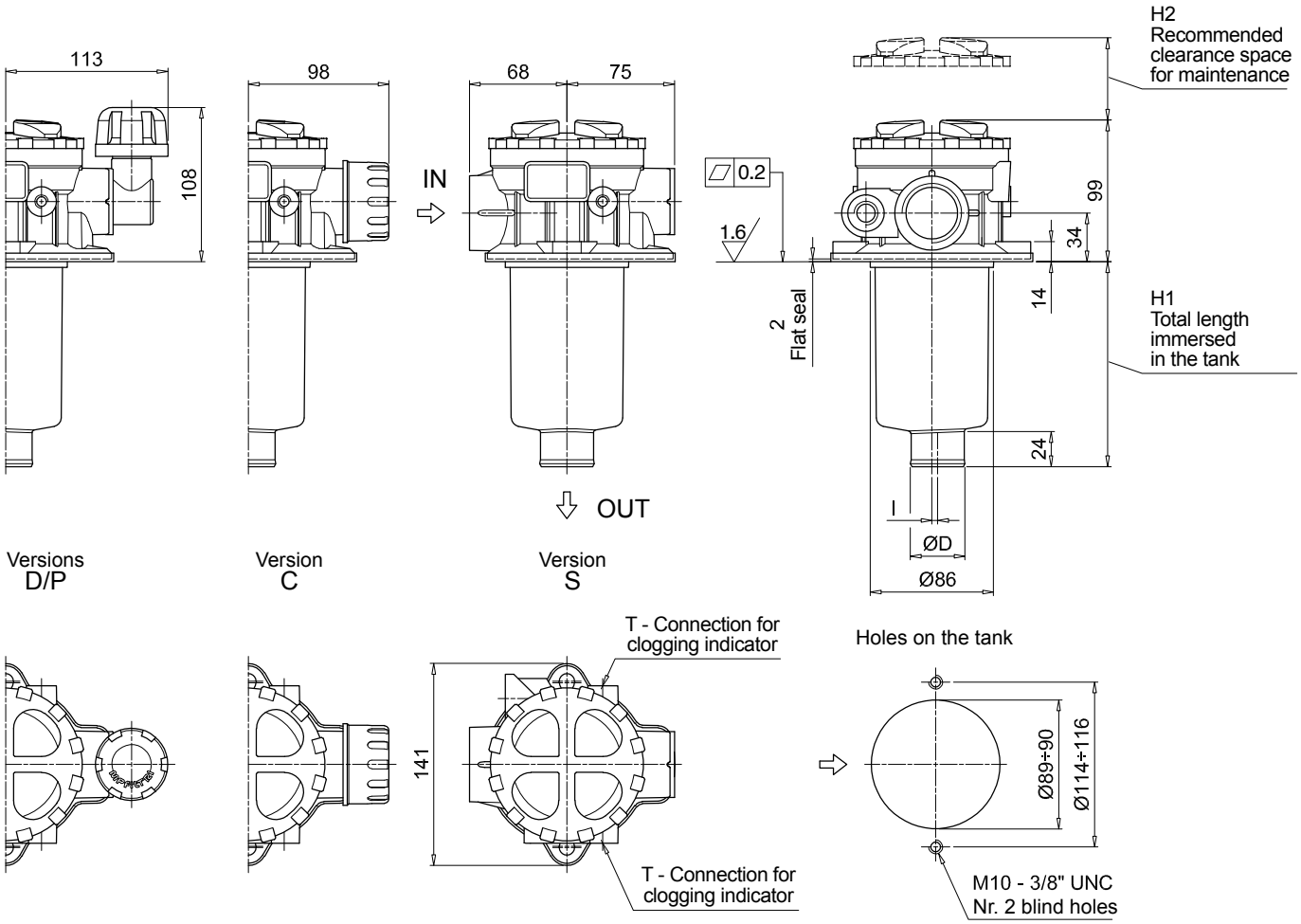

MPT MPT114

Designation & Ordering code

COMPLETE FILTER

Configuration example 1:	MPT114	4	S	A	G3	A10	E	P01
Configuration example 2:	MPT114	3	C	W	G6	A03	B	P01

Series and size

MPT114 Filter element with standard spigot

Length

1 | 2 | 3 | 4 |

Air breather

- **S** Without air breather
- **C** With air breather 10 µm
- **D** With anti-splash and air breather SAP050 10 µm
- **P** With anti-splash and air breather SAP050 10 µm pressurization 0.5 bar

Seals and treatments	Filtration rating Axx	Mxx	Pxx
A NBR	•	•	•
V FPM	•	•	•
W NBR head anodized	•	•	-
Z FPM head anodized	•	•	-

Connections

G1	G 3/4”	**G6**	1 1/4” NPT
G2	G 1”	**G7**	SAE 12 - 1 1/16” - 12 UN
G3	G 1 1/4”	**G8**	SAE 16 - 1 5/16” - 12 UN
G4	3/4” NPT	**G9**	SAE 20 - 1 5/8” - 12 UN
G5	1” NPT		

Filtration rating (filter media)

A03	Inorganic microfiber 3 µm	**M25**	Wire mesh 25 µm
A06	Inorganic microfiber 6 µm	**M60**	Wire mesh 60 µm
A10	Inorganic microfiber 10 µm	**M90**	Wire mesh 90 µm
A16	Inorganic microfiber 16 µm	**P10**	Resin impregnated paper 10 µm
A25	Inorganic microfiber 25 µm	**P25**	Resin impregnated paper 25 µm

Bypass valve

- **E** 3 bar
- **B** 1.75 bar

Execution

- **P01** MP Filtri standard
- **Pxx** Customized

FILTER ELEMENT

Configuration example 2:	MF100	4	A10	H	B	E	P01
Configuration example 1:	MF100	3	A03	N	B		P01

Element series and size

MF100 Filter element with standard spigot

Element length

1 | 2 | 3 | 4 |

Filtration rating (filter media)

A03	Inorganic microfiber 3 µm	**M25**	Wire mesh 25 µm
A06	Inorganic microfiber 6 µm	**M60**	Wire mesh 60 µm
A10	Inorganic microfiber 10 µm	**M90**	Wire mesh 90 µm
A16	Inorganic microfiber 16 µm	**P10**	Resin impregnated paper 10 µm
A25	Inorganic microfiber 25 µm	**P25**	Resin impregnated paper 25 µm

Element Δp	Filter media Axx	Mxx	Pxx
N 10 bar	-	•	•
H 10 bar	•	-	-

Seals

- **B** NBR
- **V** FPM

Bypass valve

- **E** 3 bar
- **-** 1.75 bar

Execution

- **P01** MP Filtri standard
- **Pxx** Customized

CLOGGING INDICATORS

See page 710-711

- **BVA** Axial pressure gauge
- **BVR** Radial pressure gauge
- **BVP** Visual pressure indicator with automatic reset
- **BVQ** Visual pressure indicator with manual reset
- **BEA** Electrical pressure indicator
- **BEM** Electrical pressure indicator
- **BLA** Electrical / visual pressure indicator

ADDITIONAL FEATURES

See page 266

- **TE** Extension tube
- **DFS** Diffuser with fast lock connection
- **DPT** Dipstick

MPT114				
Filter length	H1 [mm]	H2 [mm]	D [mm]	l [mm]
1	97	120	38	4
2	144	170	38	4
3	222	250	47	-
4	324	350	47	2.5

Connections	T
G1-G2-G3	G 1/8”
G4-G5-G6-G7-G8-G9	1/8” NPT

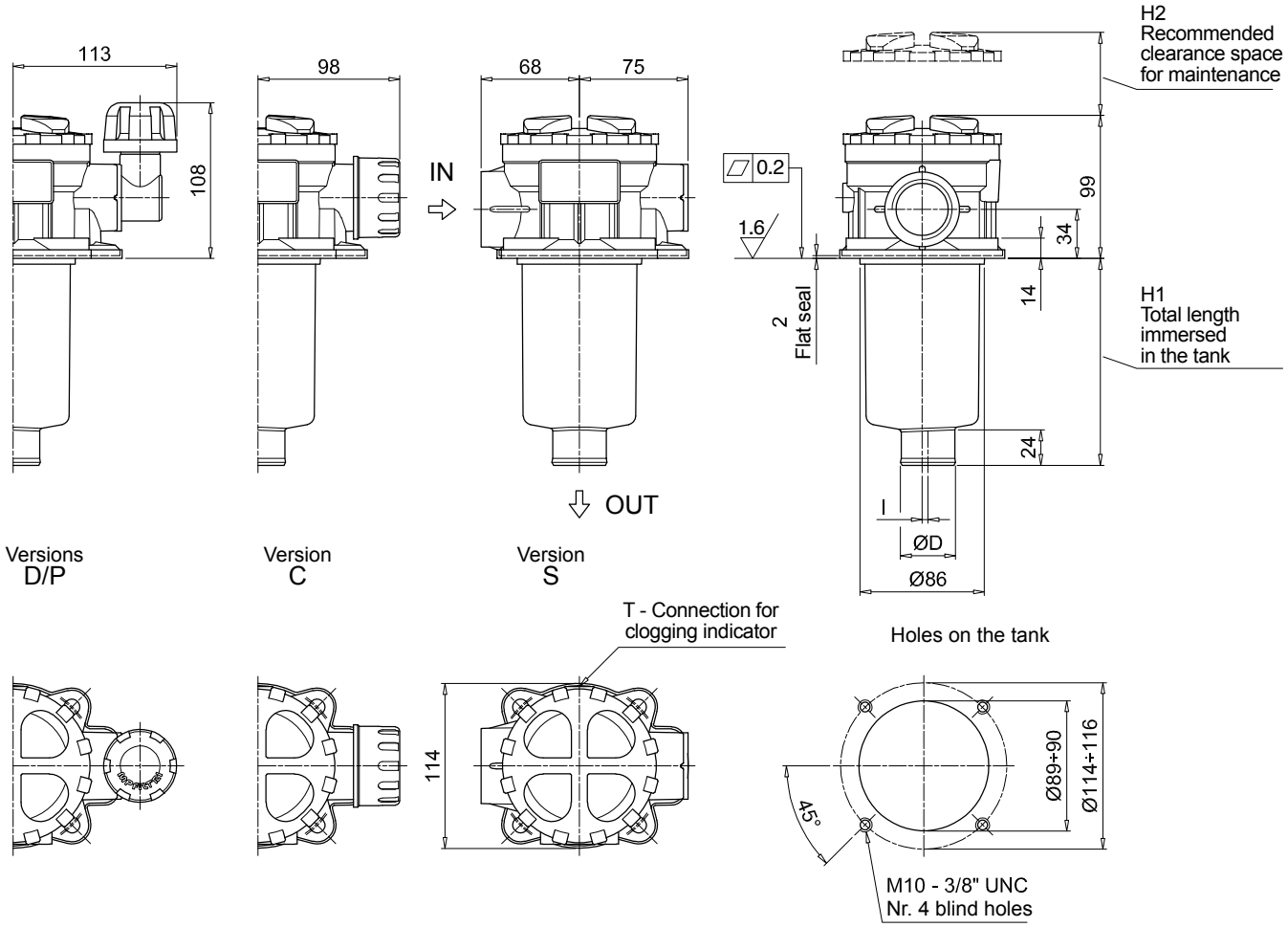

MPT MPT116

Designation & Ordering code

COMPLETE FILTER

Configuration example 1:	MPT116	1	S	A	G1	M90	E	P01
Configuration example 2:	MPT116	2	S	Z	G9	A03	B	P01

Series and size

MPT116 Filter element with standard spigot

Length

1 | **2** | **3** | **4** |

Air breather

S Without air breather

Seals and treatments

		Filtration rating Axx	Mxx	Pxx
A	NBR	•	•	•
V	FPM	•	•	•
W	NBR head anodized	•	•	-
Z	FPM head anodized	•	•	-

Flat seal on the head on request

Connections

G1	G 3/4”	**G6**	1 1/4” NPT
G2	G 1”	**G7**	SAE 12 - 1 1/16” - 12 UN
G3	G 1 1/4”	**G8**	SAE 16 - 1 5/16” - 12 UN
G4	3/4” NPT	**G9**	SAE 20 - 1 5/8” - 12 UN
G5	1” NPT		

Filtration rating (filter media)

A03	Inorganic microfiber 3 µm	**M25**	Wire mesh 25 µm
A06	Inorganic microfiber 6 µm	**M60**	Wire mesh 60 µm
A10	Inorganic microfiber 10 µm	**M90**	Wire mesh 90 µm
A16	Inorganic microfiber 16 µm	**P10**	Resin impregnated paper 10 µm
A25	Inorganic microfiber 25 µm	**P25**	Resin impregnated paper 25 µm

Bypass valve

E	3 bar
B	1.75 bar

Execution

P01	MP Filtri standard
Pxx	Customized

FILTER ELEMENT

Configuration example 2:	MF100	1	M90	N	B	E	P01
Configuration example 1:	MF100	2	A03	H	V		P01

Element series and size

MF100 Filter element with standard spigot

Element length

1 | **2** | **3** | **4** |

Filtration rating (filter media)

A03	Inorganic microfiber 3 µm	**M25**	Wire mesh 25 µm
A06	Inorganic microfiber 6 µm	**M60**	Wire mesh 60 µm
A10	Inorganic microfiber 10 µm	**M90**	Wire mesh 90 µm
A16	Inorganic microfiber 16 µm	**P10**	Resin impregnated paper 10 µm
A25	Inorganic microfiber 25 µm	**P25**	Resin impregnated paper 25 µm

Element Δp

		Filter media Axx	Mxx	Pxx
N	10 bar	-	•	•
H	10 bar	•	-	-

Seals

B	NBR
V	FPM

Bypass valve

E	3 bar
-	1.75 bar

Execution

P01	MP Filtri standard
Pxx	Customized

CLOGGING INDICATORS

See page 710-711

BVA	Axial pressure gauge	**BEA**	Electrical pressure indicator
BVR	Radial pressure gauge	**BEM**	Electrical pressure indicator
BVP	Visual pressure indicator with automatic reset	**BLA**	Electrical / visual pressure indicator
BVQ	Visual pressure indicator with manual reset		

ADDITIONAL FEATURES

See page 266

TE	Extension tube	**DPT**	Dipstick
DFS	Diffuser with fast lock connection		

MPT116				
Filter length	H1 [mm]	H2 [mm]	D [mm]	l [mm]
1	99	120	38	4
2	146	170	38	4
3	224	250	47	-
4	326	350	47	2.5

Connections	T
G1-G2-G3	G 1/8”
G4-G5-G6-G7-G8-G9	1/8” NPT

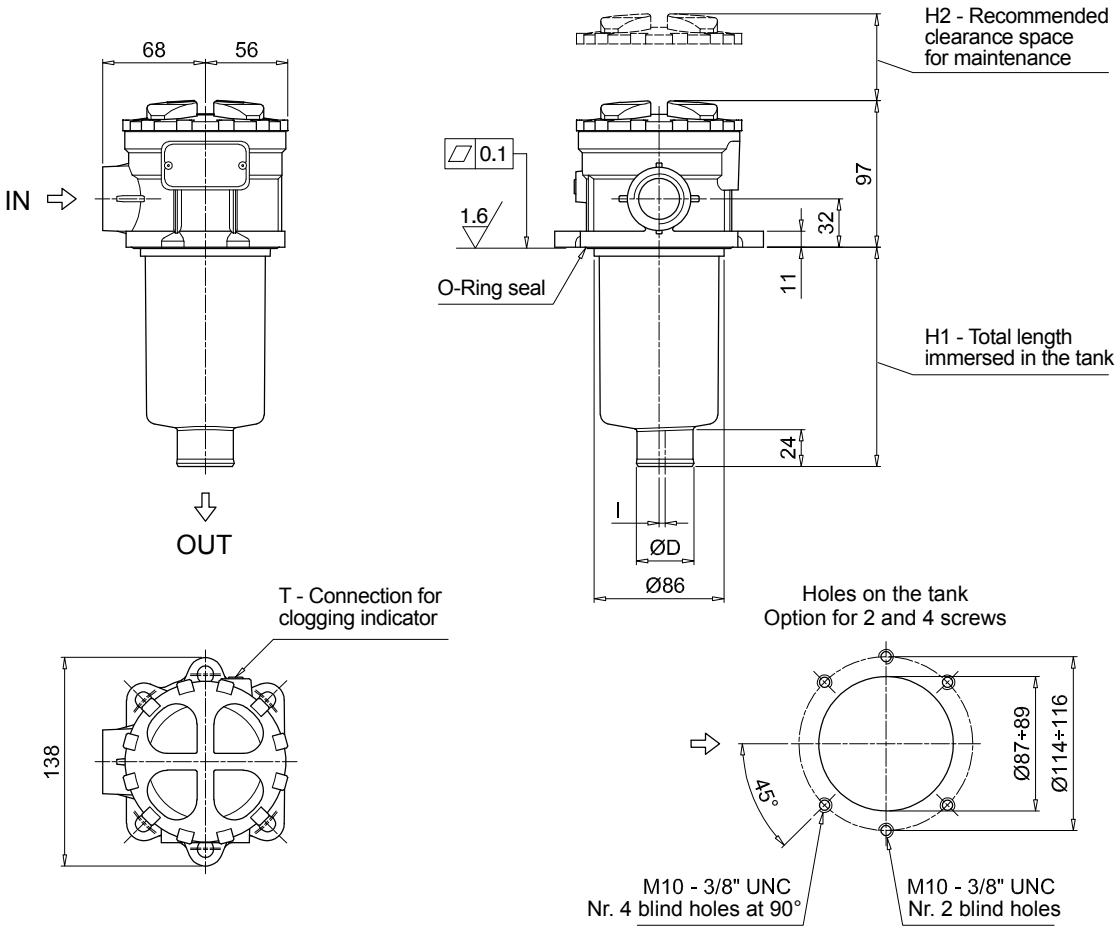

MPT MPT120

Designation & Ordering code

COMPLETE FILTER

Configuration example 1:	MPT120	1	A	G1	0	A06	E	P01
Configuration example 2:	MPT120	3	V	G4	1	M25	B	P01

Series and size

MPT120 Filter element with standard spigot

Length

1 | **2** | **3** | **4** |

Seals and treatments		Filtration rating Axx	Mxx	Pxx
A	NBR	•	•	•
V	FPM	•	•	•
W	NBR head anodized	•	•	-
Z	FPM head anodized	•	•	-

Main Connections		Rear connections	Aux size 1	Aux size 2
G1	G 3/4”	G 3/4”	G 3/8”	G 1/2”
G2	G 1”	G 1”		
G3	G 1 1/4”	G 3/4”		
G4	3/4” NPT	3/4” NPT	3/8” NPT	1/2” NPT
G5	1” NPT	1” NPT		
G6	1 1/4” NPT	3/4” NPT		
G7	SAE 12 - 1 1/16” - 12 UN	SAE 12 - 1 1/16” - 12 UN	SAE 6 - 9/16” - 18 UNF	SAE 8 - 3/4” - 16 UNF
G8	SAE 16 - 1 5/16” - 12 UN	SAE 16 - 1 5/16” - 12 UN		
G9	SAE 20 - 1 5/8” - 12 UN	SAE 12 - 1 1/16” - 12 UN		

Aux connection - see previous table

0 Not machined **1** Aux size 1 **2** Aux size 2

Filtration rating (filter media)

A03	Inorganic microfiber 3 µm	**M25**	Wire mesh 25 µm
A06	Inorganic microfiber 6 µm	**M60**	Wire mesh 60 µm
A10	Inorganic microfiber 10 µm	**M90**	Wire mesh 90 µm
A16	Inorganic microfiber 16 µm	**P10**	Resin impregnated paper 10 µm
A25	Inorganic microfiber 25 µm	**P25**	Resin impregnated paper 25 µm

Bypass valve

E 3 bar
B 1.75 bar

Execution

P01 MP Filtri standard
Pxx Customized

FILTER ELEMENT

Configuration example 1:	MF100	1	A06	H	B	E	P01
Configuration example 2:	MF100	3	M25	N	V		P01

Element series and size

MF100 Filter element with standard spigot

Element length

1 | **2** | **3** | **4** |

Filtration rating (filter media)

A03	Inorganic microfiber 3 µm	**M25**	Wire mesh 25 µm
A06	Inorganic microfiber 6 µm	**M60**	Wire mesh 60 µm
A10	Inorganic microfiber 10 µm	**M90**	Wire mesh 90 µm
A16	Inorganic microfiber 16 µm	**P10**	Resin impregnated paper 10 µm
A25	Inorganic microfiber 25 µm	**P25**	Resin impregnated paper 25 µm

Element Δp		Filter media Axx	Mxx	Pxx
N	10 bar	-	•	•
H	10 bar	•	-	-

Seals

B NBR
V FPM

Bypass valve

E 3 bar
- 1.75 bar

Execution

P01 MP Filtri standard
Pxx Customized

CLOGGING INDICATORS

See page 710-711

BVA Axial pressure gauge
BVR Radial pressure gauge
BVP Visual pressure indicator with automatic reset
BVQ Visual pressure indicator with manual reset
BEA Electrical pressure indicator
BEM Electrical pressure indicator
BLA Electrical / visual pressure indicator

ADDITIONAL FEATURES

See page 266

TE Extension tube
DFS Diffuser with fast lock connection
DPT Dipstick

MPT120				
Filter length	H1 [mm]	H2 [mm]	D [mm]	l [mm]
1	97	120	38	4
2	147	170	38	4
3	222	250	47	-
4	324	350	47	2.5

Connections	T
G1-G2-G3	G 1/8”
G4-G5-G6-G7-G8-G9	1/8” NPT

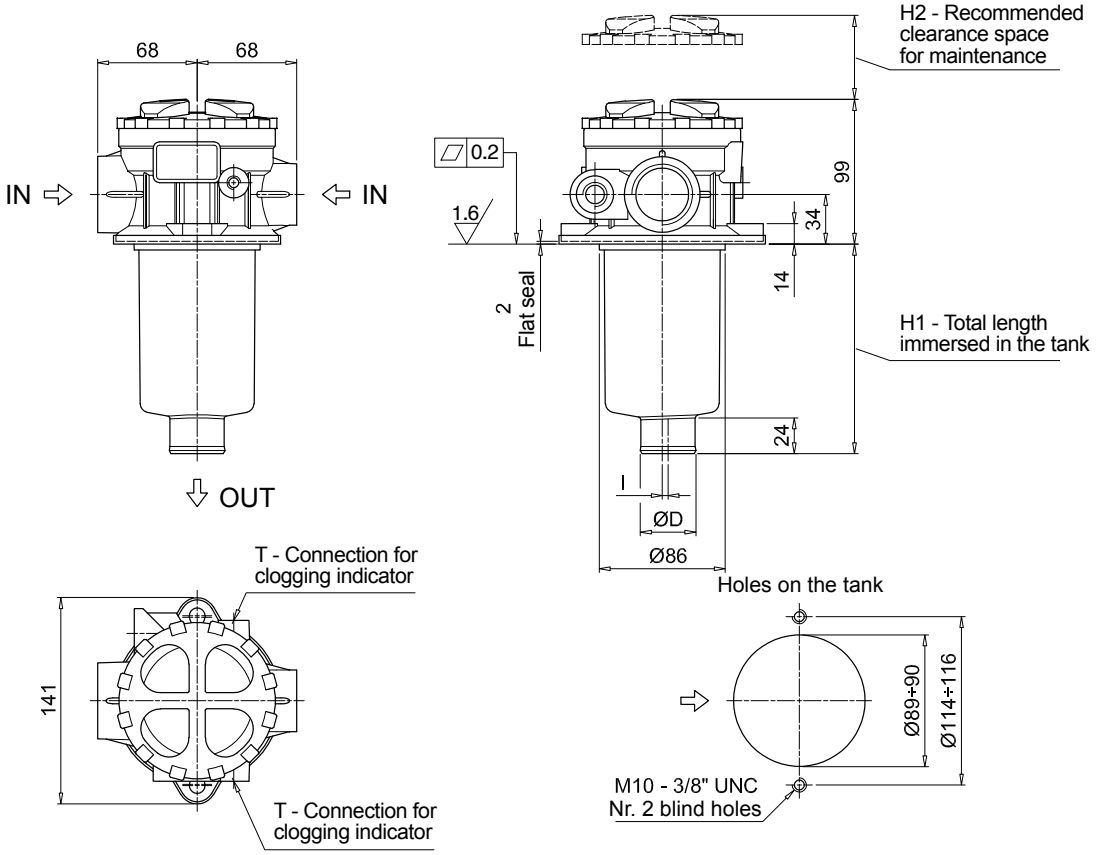

Order number for spare parts

MPT 025 - 027 - 110

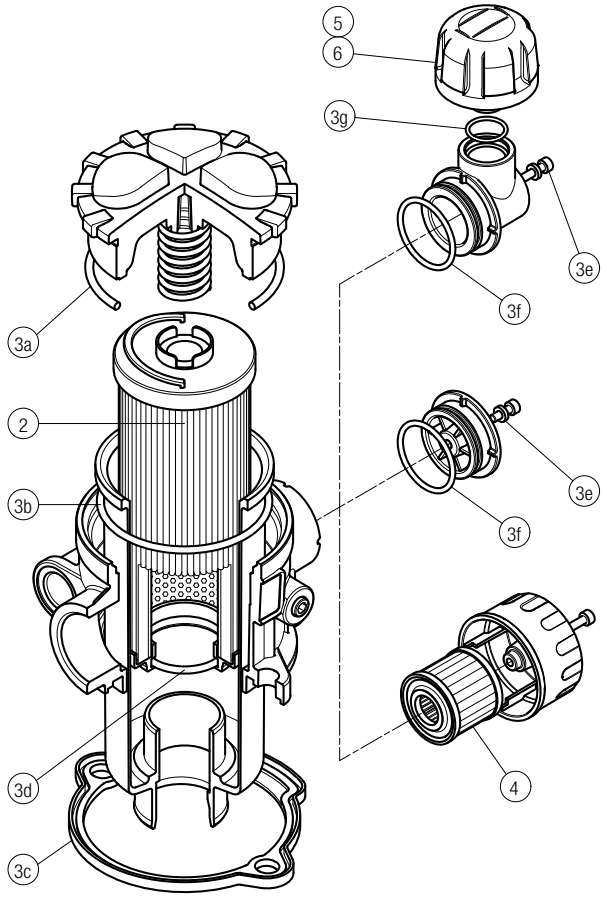

Item:	Q.ty: 1 pc. 2	Q.ty: 1 pc. 3 (3a ÷ 3g)		Q.ty: 1 pc. 4	Q.ty: 1 pc. 5	Q.ty: 1 pc. 6
Filter series	**Filter element**	**Seal Kit code number NBR**	**FPM**	**C**	**D**	**P**
MPT 025	See order table	02050557	02050558	10 µm A3L03	10 µm SAP50G3L03A0P01	10 µm SAP50G3L03A1P01
MPT 027		02050559	02050560	10 µm A3L03	10 µm SAP50G3L03A0P01	10 µm SAP50G3L03A1P01
MPT 110		02050561	02050562	10 µm A5L03	10 µm SAP50G3L03A0P01	10 µm SAP50G3L03A1P01

MPT 116

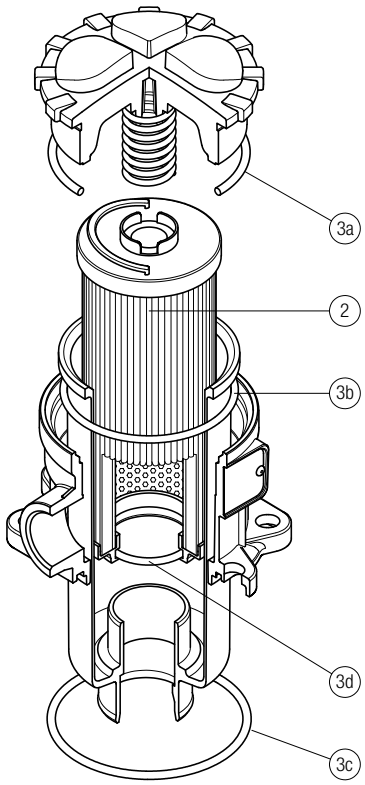

Item:	Q.ty: 1 pc. 2	Q.ty: 1 pc. 3 (3a ÷ 3d)	
Filter series	**Filter element**	**Seal Kit code number NBR**	**FPM**
MPT 116	See order table	02050466	02050467

Order number for spare parts

MPT 114

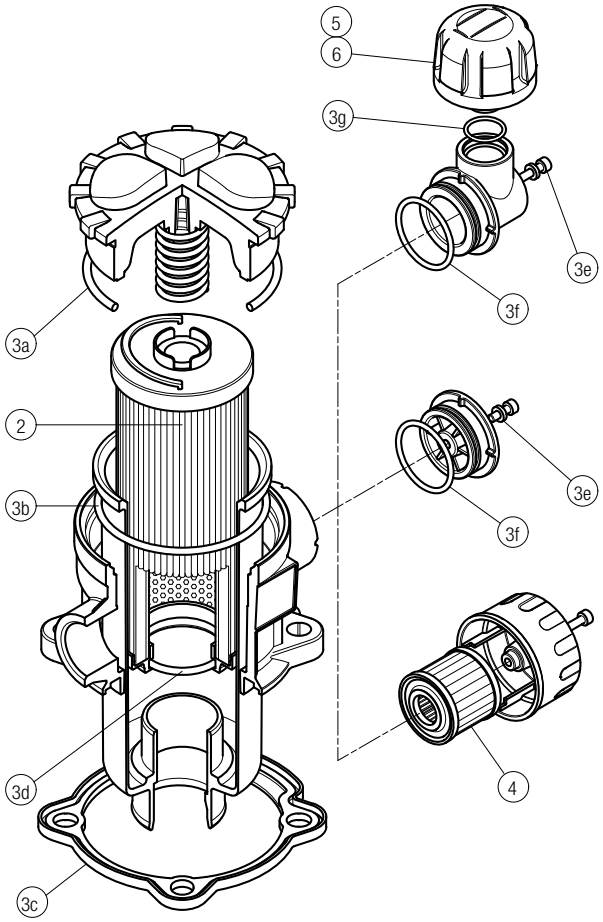

Item:	Q.ty: 1 pc. 2	Q.ty: 1 pc. 3 (3a ÷ 3g)		Q.ty: 1 pc. 4	Q.ty: 1 pc. 5	Q.ty: 1 pc. 6
Filter series	Filter element	Seal Kit code number NBR	FPM	Air breather filter element - version: C	D	P
MPT 114	See order table	02050580	02050581	10 µm A5L03	10 µm SAP50G3L03A0P01	10 µm SAP50G3L03A1P01

MPT 120

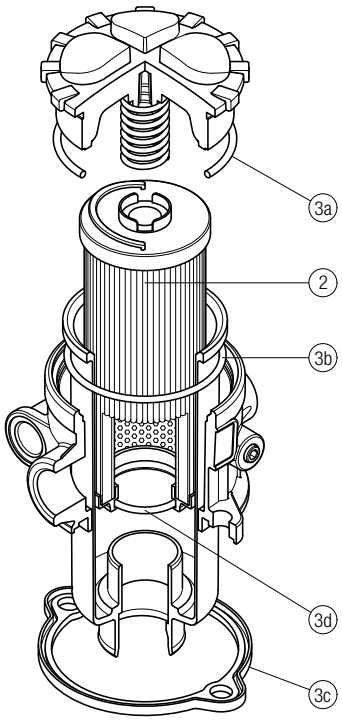

Item:	Q.ty: 1 pc. 2	Q.ty: 1 pc. 3 (3a ÷ 3d)	
Filter series	Filter element	Seal Kit code number NBR	FPM
MPT 120	See order table	02050563	02050564

MFB series
BOWL ASSEMBLY

Maximum working pressure up to 800 kPa (8 bar) - Flow rate up to 700 l/min

MFB GENERAL INFORMATION

Description

Return filter | Bowl assembly

Maximum working pressure up to 800 kPa (8 bar)
Flow rate up to 700 l/min

MFB is a range of return filter kits for protection of the reservoir against the system contamination.
They are directly integrated in the moulded reservoir in immersed or semi-immersed position to save space into the tank.
Treaded or flanged covers can be provided.
The filter output must be always immersed into the fluid to avoid aeration or foam generation into the reservoir.

Available features:
- Fine filtration rating, to get a good cleanliness level into the reservoir
- Bypass valve integrated into the filter element, to relieve excessive pressure drop across the filter media
- Extension tube, to be used in deep reservoirs (sold as separate item)
- Diffuser, to reduce the risk of aeration, foaming and noise (sold as separate item)

Common applications:
Mobile machines

Technical data

Bowl assembly materials
- Cover
  Polyamide: MFB 020-030-100
  Aluminium: MFB 180-190

- Bowl: Polyamide

Filter element materials
- Caps: Polyamide
- Spring: Spring steel

Bypass valve
- Opening pressure 175 kPa (1.75 bar) ±10%
- Opening pressure 300 kPa (3 bar) ±10%

Δp element type
- Microfibre filter elements - series H: 10 bar
- Fluid flow through the filter element from OUT to IN

Seals
- Standard NBR series A
- Optional FPM series V

Temperature
From -25 °C to +110 °C

Note
MFB filters are provided for vertical mounting

Weights [kg] and volumes [dm³]

Filter series	Weights [kg]					Volumes [dm³]				
	Length	1	2	3	4	Length	1	2	3	4
MFB 020		0.25	0.35	0.40	-		0.10	0.15	0.20	-
MFB 030		0.25	-	-	-		0.15	-	-	-
MFB 100		0.50	0.60	0.75	0.95		0.35	0.50	0.80	1.10
MFB 180		1.60	2.40	-	-		1.50	2.90	-	-
MFB 190		-	2.40	-	-		-	3.00	-	-

FILTER ASSEMBLY SIZING
Flow rates [l/min]

		Filter element design - H series					Filter element design - N series		
Filter series	Length	A03	A06	A10	A16	A25	M25 M60 M90	P10	P25
MFB 020	**1**	7	10	23	28	42	59	51	54
	2	17	20	45	48	56	72	64	67
	3	21	24	50	55	59	76	74	75
MFB 030	**1**	7	10	24	29	47	84	60	66
MFB 100	**1**	18	20	53	56	65	153	87	96
	2	28	38	65	75	95	158	111	123
	3	48	55	125	135	169	289	224	251
	4	79	89	180	185	198	306	264	289
MFB 180	**1**	127	148	235	243	278	441	285	299
	2	231	262	358	382	388	472	404	412
MFB 190	**2**	261	305	489	528	546	696	583	598

Maximum flow rate for a complete return filter with a pressure drop Δp = 0.5 bar.
The reference fluid has a kinematic viscosity of 30 mm^2/s (cSt) and a density of 0.86 kg/dm^3.
For different pressure drop or fluid viscosity we recommend to use our selection software available on www.mpfiltri.com.
You can also calculate the right size using the formulas present on the FILTER SIZING paragraph at the beginning of the full catalogue or at the beginning of the filter family brochure.
Please, contact our Sales Department for further additional information.

Hydraulic symbols

Filter series	Style 1 connection
MFB 020	•
MFB 030	•
MFB 100	•
MFB 180	•
MFB 190	•

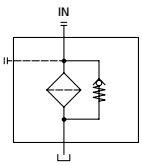

Designation & Ordering code

COMPLETE FILTER

Configuration example 1:	MFB100	1	A	2	A10	H	E	P01
Configuration example 2:	MFB180	2	V	1	M25	N	B	P01

Series and size

MFB020 | **MFB030** | **MFB100** | **MFB180** | **MFB190**

Filter element with private spigot

Length	MFB020	MFB030	MFB100	MFB180	MFB190
1	•	•	•	•	-
2	•	-	•	•	•
3	•	-	•	-	-
4	-	-	•	-	-

Seals

A NBR
V FPM

Version	MFB020	MFB030	MFB100	MFB180	MFB190
1 Without cover	•	•	•	•	•
2 With flanged cover type MPF	-	•	•	•	•
3 With threaded cover type MPT	•	-	•	-	-

Filtration rating (filter media)

A03 Inorganic microfiber 3 µm
A06 Inorganic microfiber 6 µm
A10 Inorganic microfiber 10 µm
A16 Inorganic microfiber 16 µm
A25 Inorganic microfiber 25 µm
M25 Wire mesh 25 µm
M60 Wire mesh 60 µm
M90 Wire mesh 90 µm
P10 Resin impregnated paper 10 µm
P25 Resin impregnated paper 25 µm

Element Δp	Filter media Axx	Mxx	Pxx
N 10 bar	-	•	•
H 10 bar	•	-	-

Bypass valve

E 3 bar
B 1.75 bar

Execution

P01 MP Filtri standard
Pxx Customized

FILTER ELEMENT

Configuration example 1:	MF100	1	A10	H	B	E	P01
Configuration example 2:	MF180	2	M25	N	V		P01

Element series and size

MF020 | **MF030** | **MF100** | **MF180** | **MF190**

Filter element with private spigot

Element length	MF020	MF030	MF100	MF180	MF190
1	•	•	•	•	-
2	•	-	•	•	•
3	•	-	•	-	-
4	-	-	•	-	-

Filtration rating (filter media)

A03 Inorganic microfiber 3 µm
A06 Inorganic microfiber 6 µm
A10 Inorganic microfiber 10 µm
A16 Inorganic microfiber 16 µm
A25 Inorganic microfiber 25 µm
M25 Wire mesh 25 µm
M60 Wire mesh 60 µm
M90 Wire mesh 90 µm
P10 Resin impregnated paper 10 µm
P25 Resin impregnated paper 25 µm

Element Δp	Filter media Axx	Mxx	Pxx
N 10 bar	-	•	•
H 10 bar	•	-	-

Seals

B NBR
V FPM

Bypass valve

E 3 bar
- 1.75 bar

Execution

P01 MP Filtri standard
Pxx Customized

ADDITIONAL FEATURES

See page 266

	MFB020	MFB030	MFB100	MFB180	MFB190
TE Extension tube	•	•	•	•	•
DFS Diffuser with fast lock connection	-	-	•	-	-

MFB

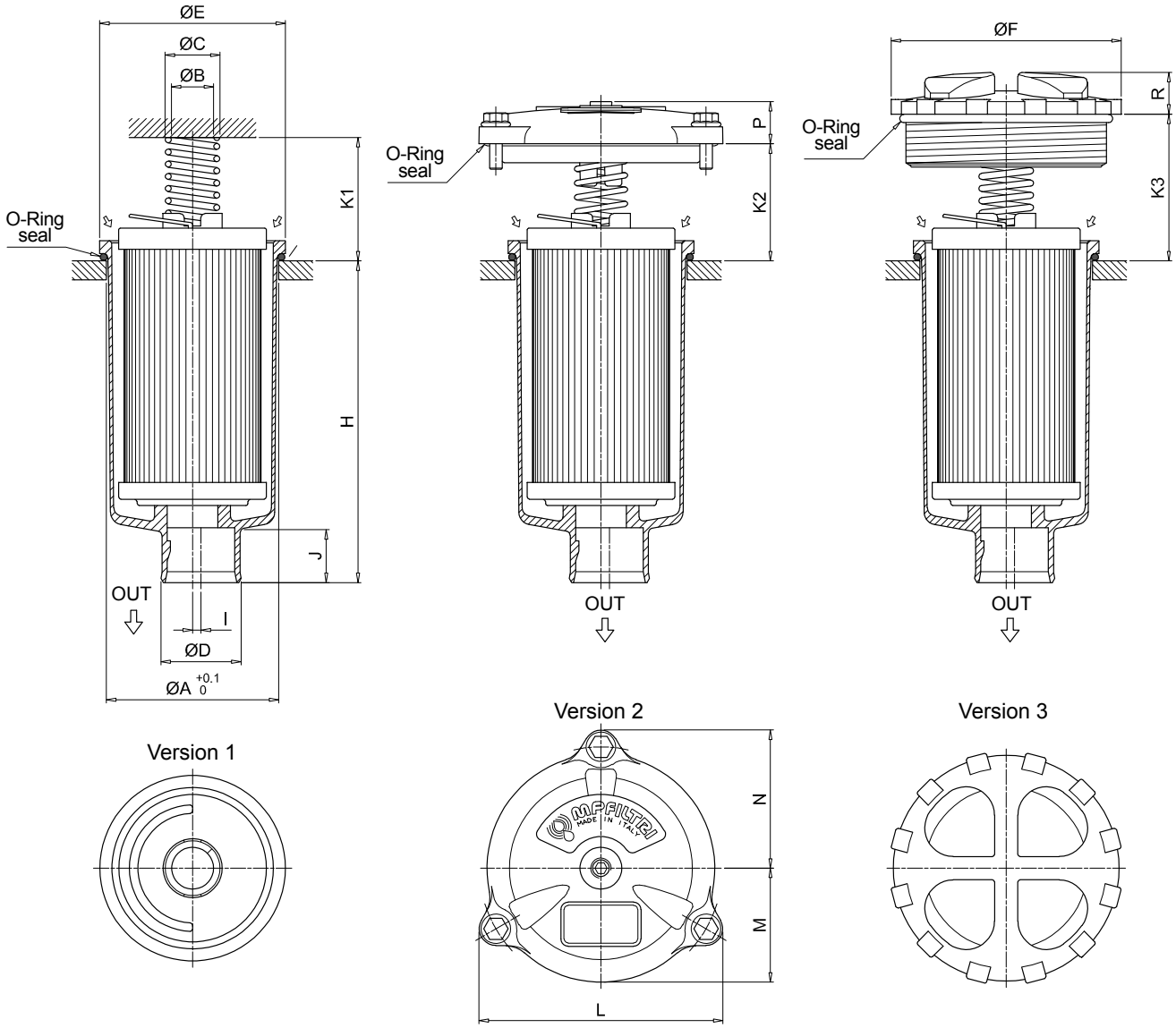

Filter size	Filter Length	ø A [mm]	ø B [mm]	ø C [mm]	ø D [mm]	ø E [mm]	ø F [mm]	H [mm]	I [mm]	J [mm]	K1 [mm]	K2 [mm]	K3 [mm]	L [mm]	M [mm]	N [mm]	P [mm]	R [mm]
020	1	52	20.5	26	32	56	75	111	0	24	42	-	36	-	-	-	-	18
	2	52	20.5	26	32	56	75	175	0	24	42	-	36	-	-	-	-	18
	3	52	20.5	26	32	56	75	214	0	24	42	-	36	-	-	-	-	18
030	1	60.5	20	25.5	32	68	-	92	3	21	33	35	-	92	42	52	18	-
100	1	80.5	20	26	38	88	111	107	4	24	58	55	69	116	54	66	20	20
	2	80.5	20	26	38	88	111	154	4	24	58	55	69	116	54	66	20	20
	3	80.5	20	26	47	88	111	232	0	24	58	55	69	116	54	66	20	20
	4	80.5	20	26	47	88	111	334	2.5	24	58	55	69	116	54	66	20	20
180	1	112.5	26	33.5	47	121	-	234	0	31	58	58	69	159	76	95	21	-
	2	112.5	26	33.5	47	121	-	447	0	31	58	58	69	159	76	95	21	-
190	2	112.5	26	33.5	50	121	-	454	0	38	58	58	69	159	76	95	21	-

Order number for spare parts

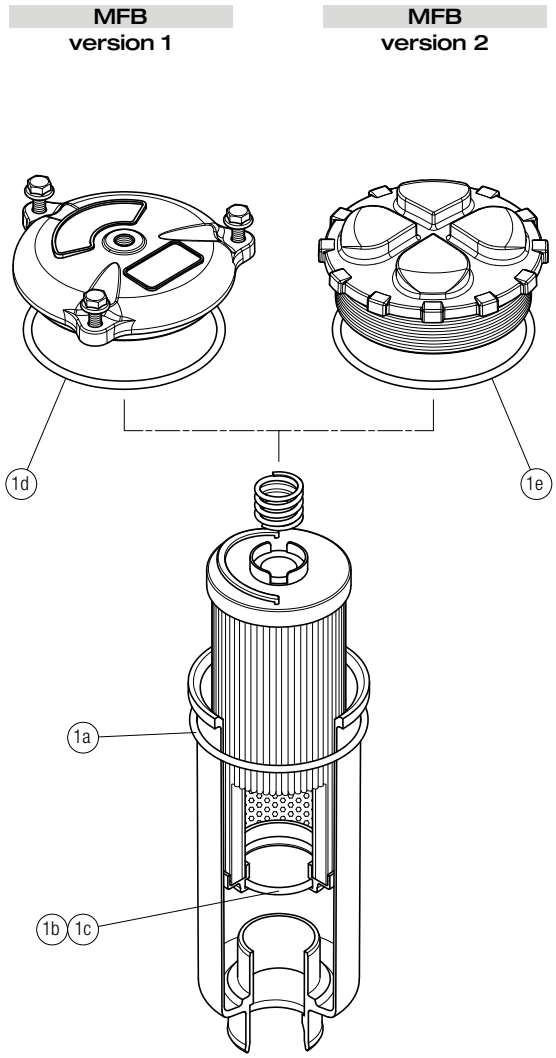

Item:	Q.ty: 1 pc. 1 (1a ÷ 1e)	
Filter series	Seal Kit code number NBR	FPM
MFB 020	02050572	02050573
MFB 030	02050574	02050575
MFB 100	02050555	02050556
MFB 180	02050576	02050577
MFB 190	02050578	02050579

MDH series

Maximum working pressure up to 1 MPa (10 bar) - Flow rate up to 500 l/min

MDH GENERAL INFORMATION

Description

Return filter

Maximum working pressure up to 1 MPa (10 bar)
Flow rate up to 500 l/min

MDH, is a technically advanced filtration product line for efficient and compact, hydraulic reservoir management. Designed to ensure overall system cleanliness, the filters are either installed in a semi immersed or fully immersed position. This new design reduces the volume of the air coming into the tank space and dramatically reduces the velocity of the air through the filter which in turn allows the separation of the air from the fluid. This insures that the system is protected against the effects caused by air contamination such as incorrect system response, cavitation, foaming and fluid degradation. The filtration from inside to outside allows for a cleaner filter element replacement which insures that any contaminated fluid remains within the used filter element.

Available features:

- Female threaded connections up to 1 1/2" and flanged connections up to 1 1/2", for a maximum flow rate of 500 l/min
- Multiple connections, to connect several return lines or drains
- Fine filtration rating, to get a good cleanliness level into the reservoir
- Bypass valve, to relieve excessive pressure drop across the filter media
- Flat Seal to suit a variety of reservoir surfaces
- Oil dipstick, to easily check the level of the fluid into the reservoir (separate item)
- Anti-drain membrane, to reduce the volume of air coming to the tank
- Optimized flow path, to reduce the speed of the fluid through the filter
- Diffuser with optimized output, to promote the air separation and to reduce the risk of foaming and noise
- Optional filler plug, to fill cleaned fluid into the tank without an additional plug
- Visual, electrical and electronic clogging indicators and differential pressure clogging indicators

Common applications:

Heavy duty industrial equipment
Large mobile machines with limited space for the tank

Technical data

Filter housing materials

- Head and cover: Aluminium
- Anti-drain membrane: Polyamide
- Diffuser: AISI 430
- Valve: Polyamide / Steel

Bypass valve

- Opening pressure 175 kPa (1.75 bar) ±10%
- Opening pressure 300 kPa (3 bar) ±10%

Δp element type

- Microfibre filter elements - series DH: 10 bar
- Fluid flow through the filter element from IN to OUT

Seals

- Standard NBR series A
- Optional FPM series V

Temperature

From -25 °C to +110 °C

Note

MDH filters are provided for vertical mounting

Weights [kg] and volumes [dm³]

Filter series	Weights [kg]			Volumes [dm³]		
	Length	2	4	Length	2	4
MDH 250		3.80	4.55		4.65	6.90

FILTER ASSEMBLY SIZING
Flow rates [l/min]

Filter series	Length	A03	A06	A10	A16	A25	M25 M60 M90	P10	P25
MDH 250	**2**	134	120	244	255	303	480	326	370
	4	217	256	338	419	487	465	437	694

Maximum flow rate for a complete return filter with a pressure drop Δp = 0.5 bar.
The reference fluid has a kinematic viscosity of 30 mm^2/s (cSt) and a density of 0.86 kg/dm^3.
For different pressure drop or fluid viscosity we recommend to use our selection software available on www.mpfiltri.com.
You can also calculate the right size using the formulas present on the FILTER SIZING paragraph at the beginning of the full catalogue or at the beginning of the filter family brochure.
Please, contact our Sales Department for further additional information.

Hydraulic symbols

Filter series	Style B
MDH 250	•

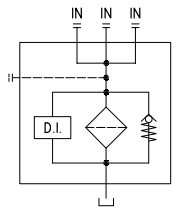

Pressure drop

Filter housings Δp pressure drop

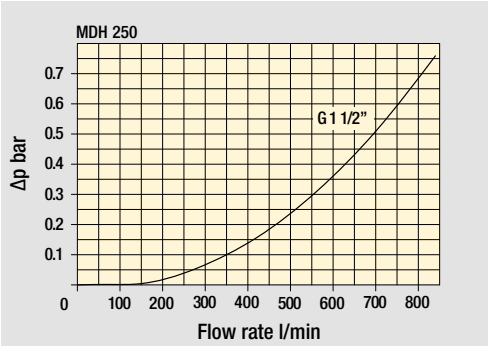

Bypass valve pressure drop

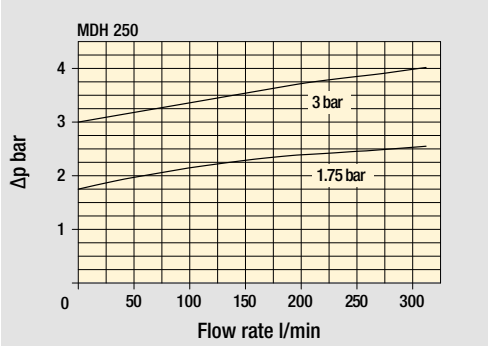

The curves are plotted using mineral oil with density of 0.86 kg/dm^3 in compliance with ISO 3968. Δp varies proportionally with density.

MDH250

Designation & Ordering code

COMPLETE FILTER

Configuration example: MDH250 | 2 | C | F | S | A | B | 2 | A10 | P01

Series and size

MDH250

Length

2 | **4**

Bypass valve

C 1.75 bar
E 3 bar

Diffuser

F With diffuser

Air breather

S Without air breather

Seals and treatments

		Filtration rating Axx	Mxx	Pxx
A	NBR	•	•	•
V	FPM	•	•	•
W	NBR head anodized	•	•	-
Z	FPM head anodized	•	•	-

Connections

	Front	Left	Right
A	G 1 1/2"	1 1/2" SAE 3000 psi/M + G 1 1/4"	1 1/4" SAE 3000 psi/M + G 1"
B	1 1/2" NPT	1 1/2" SAE 3000 psi/UNC + 1 1/4" NPT	1 1/4" SAE 3000 psi/UNC + 1" NPT
C	SAE 24 - 1 7/8" - 12 UN	1 1/2" SAE 3000 psi/UNC + SAE 20 - 1 5/8" - 12 UN	1 1/4" SAE 3000 psi/UNC + SAE 16 - 1 5/16" - 12 UN

Connection indicator

1 Without connection
2 With 2 plugged connections (pressure indicator + diff. pressure indicator)

Filtration rating (filter media)

A03	Inorganic microfiber 3 µm	**M25**	Wire mesh 25 µm
A06	Inorganic microfiber 6 µm	**M60**	Wire mesh 60 µm
A10	Inorganic microfiber 10 µm	**M90**	Wire mesh 90 µm
A16	Inorganic microfiber 16 µm	**P10**	Resin impregnated paper 10 µm
A25	Inorganic microfiber 25 µm	**P25**	Resin impregnated paper 25 µm

Execution

P01 MP Filtri standard
Pxx Customized

FILTER ELEMENT

Configuration example: DH250 | 2 | A10 | A | P01

Element series and size

DH250

Element length

2 | **4**

Filtration rating (filter media)

A03	Inorganic microfiber 3 µm	**M25**	Wire mesh 25 µm
A06	Inorganic microfiber 6 µm	**M60**	Wire mesh 60 µm
A10	Inorganic microfiber 10 µm	**M90**	Wire mesh 90 µm
A16	Inorganic microfiber 16 µm	**P10**	Resin impregnated paper 10 µm
A25	Inorganic microfiber 25 µm	**P25**	Resin impregnated paper 25 µm

Seals

A NBR
V FPM

Execution

P01 MP Filtri standard
Pxx Customized

CLOGGING INDICATORS

See page 710-711

BVA Axial pressure gauge
BVR Radial pressure gauge
BVP Visual pressure indicator with automatic reset
BVQ Visual pressure indicator with manual reset
BEA Electrical pressure indicator
BEM Electrical pressure indicator
BLA Electrical / visual pressure indicator
DES Electrical differential pressure indicator
DVS Visual differential pressure indicator

PLUGS

See page 737

T4 Plug

MDH250		
Filter length	**H1 [mm]**	**H2 [mm]**
2	300	380
4	485	565

Connections	T
A	G 1/8”
B-C	1/8” NPT

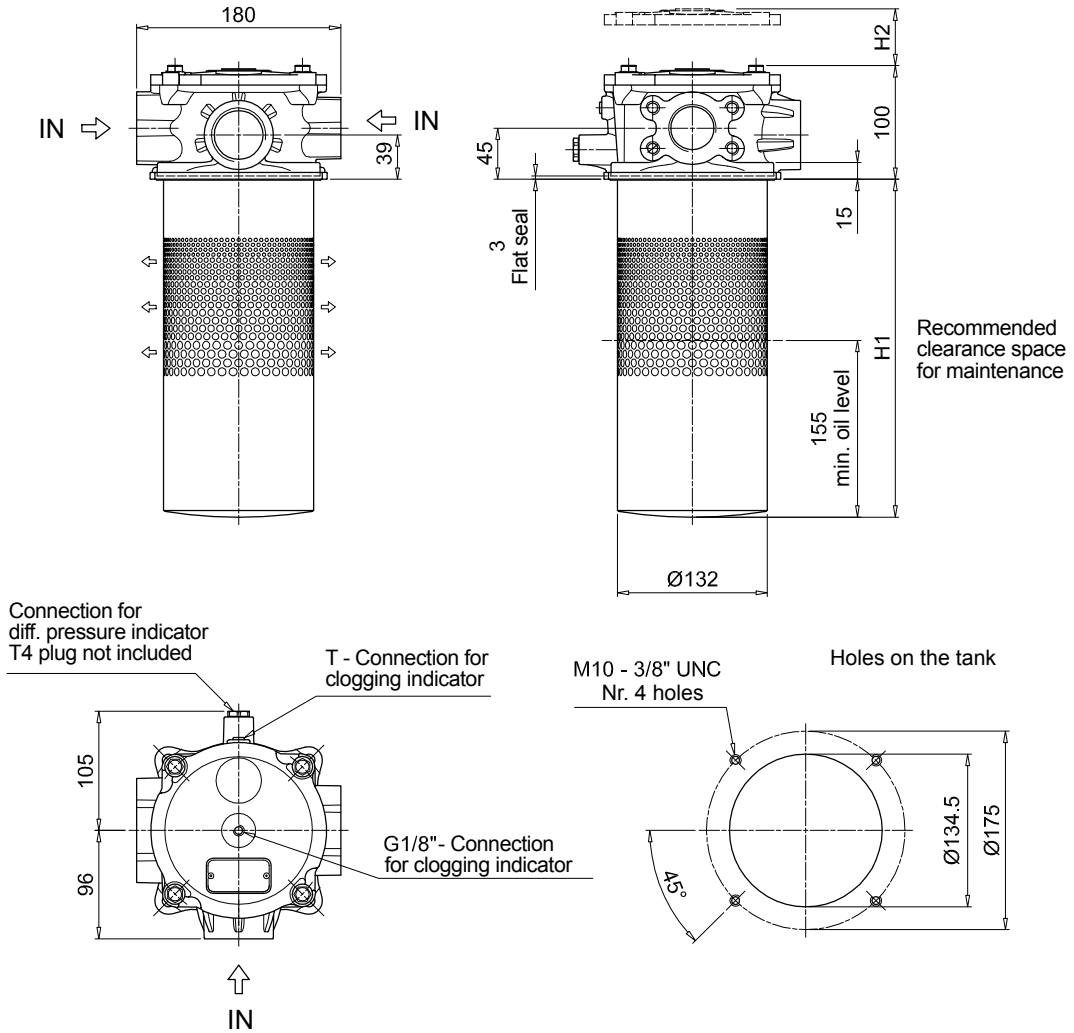

Order number for spare parts

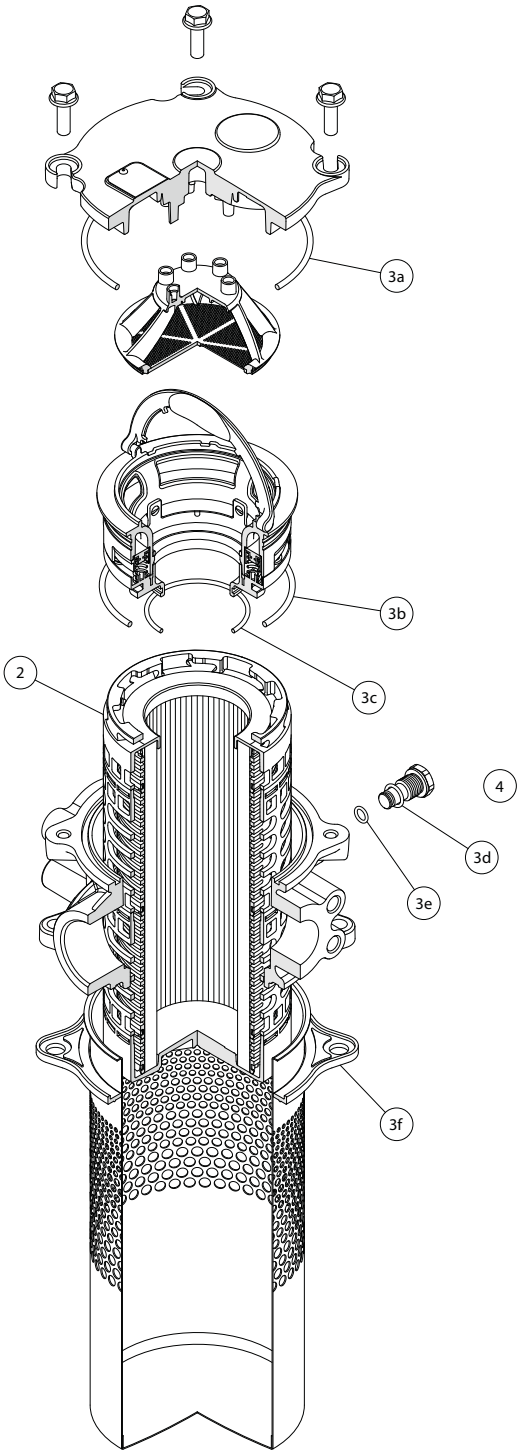

	Q.ty: 1 pc.	Q.ty: 1 pc.		Q.ty: 1 pc.
Item:	**2**	**3** (3a ÷ 3f)		**4**
Filter series	**Filter element**	**Seal Kit code number NBR**	**FPM**	**Indicator connection plug NBR**
MDH 250	See order table	02050850	02050851	T4A

MPH series

Maximum working pressure up to 1 MPa (10 bar) - Flow rate up to 3500 l/min

MPH GENERAL INFORMATION

Description

Return filter

Maximum working pressure up to 1 MPa (10 bar)
Flow rate up to 3500 l/min

MPH is a range of return filters for protection of the reservoir against the system contamination.
They are directly fixed to the reservoir, in immersed or semi-immersed position.
The use of the diffuser is recommended, to place the filter output always immersed into the fluid to avoid aeration or foam generation into the reservoir.
The filtration from inside to outside allows a cleaner filter element replacement, the dirty remains into the filter element.

Available features:

- Female threaded connections up to 1 1/2" and flanged connections up to 4", for a maximum flow rate of 3500 l/min
- Multiple connections, to connect several return lines or drains
- Fine filtration rating, to get a good cleanliness level into the reservoir
- Bypass valve, to relieve excessive pressure drop across the filter media
- Magnetic filter, to hold the ferrous particles
- 2, 3, 4 or 8 fixing holes for installation, to suit a variety of reservoir surfaces
- Flat Seal to suit a variety of reservoir surfaces
- Oil dipstick, to easily check the level of the fluid into the reservoir (separate item)
- Diffuser, to reduce the risk of aeration, foaming and noise
- Filler plug, to fill cleaned fluid into the tank without an additional plug
- Integrated breather filter, to clean the air that moves into the reservoir as result of the oil level fluctuation (MPH110/114)
- Integrated breather filter with pressurization valve, to clean the air that moves into the reservoir as result of the oil level fluctuation and to guarantee the pressurization into the reservoir (MPH110/114)
- Visual, electrical and electronic clogging indicators

Common applications:

Heavy duty industrial equipment

Technical data

Filter housing materials

- Head
  Aluminium: MPH 110-114-116-120-250
  Anodized Aluminium: MPH 630-850
  Painted Aluminium: MPH 660

- Cover
  Polyamide: MPH 110-114-116-120
  Aluminium: MPH 250
  Anodized Aluminium: MPH 630
  Painted Aluminium: MPH 660
  Steel: MPH 850

- Insert assembly
  Polyamide: MPH 110-114-116-120
  Aluminium: MPH 250-630-660-850

- Diffuser: Stainless Steel

- Valve: Phosphatized Steel

Bypass valve

- Opening pressure 175 kPa (1.75 bar)±10%
- Opening pressure 250 kPa (2.5 bar) ±10%, except for MPH 850

Δp element type

- Microfibre filter elements - series MR: 10 bar
- Fluid flow through the filter element from IN to OUT

Seals

- Standard NBR series A
- Optional FPM series V

Temperature

From -25 °C to +110 °C

Note

MPH filters are provided
for vertical mounting

Weights [kg] and volumes [dm³]

Filter series	Weights [kg]						Volumes [dm³]					
	Length	1	2	3	4	5	Length	1	2	3	4	5
MPH 110		1.60	1.70	1.80	2.20	2.60		1.60	1.70	1.80	2.20	2.60
MPH 114		1.60	1.70	1.80	2.20	2.60		1.60	1.70	1.80	2.20	2.60
MPH 116		1.60	1.70	1.80	2.20	2.60		1.60	1.70	1.80	2.20	2.60
MPH 120		1.60	1.70	1.80	2.20	2.60		1.60	1.70	1.80	2.20	2.60
MPH 250		3.60	3.90	4.20	5.60	-		4.40	4.40	5.40	8.00	-
MPH 630		6.50	7.00	7.40	8.50	10.50		7.30	9.00	11.00	13.00	19.20
MPH 660		-	-	-	11.50	14.00		-	-	-	14.60	21.00
MPH 850		32.00	35.00	38.00	42.00	-		13.00	16.50	21.00	25.00	-

FILTER ASSEMBLY SIZING
Flow rates [l/min]

Filter series	Length	A03	A06	A10	A16	A25	M25 M60 M90	P10	P25
MPH 110-114 116-120	1	26	29	72	79	107	282	164	190
	2	43	46	112	114	161	318	164	190
	3	64	72	132	156	178	324	219	251
	4	90	99	184	198	216	324	266	302
	5	117	128	201	219	244	324	282	318
MPH 250	1	93	102	210	251	315	1093	339	383
	2	124	151	327	412	421	1122	460	514
	3	189	221	418	445	500	1137	544	616
	4	261	304	592	670	766	1166	832	923
MPH 630	1	160	200	369	423	518	1894	565	632
	2	240	257	571	611	1045	1929	1137	1285
	3	330	374	745	788	1308	1938	1416	1577
	4	374	403	887	1010	1348	1956	1448	1612
	5	625	698	1210	1257	1723	2121	1839	1929
MPH 660	4	370	399	903	1042	1460	2376	1596	1830
	5	624	699	1282	1343	1997	2663	2182	2331
MPH 850	1	775	1041	1246	1568	2242	3311	2371	2625
	2	1176	1522	1682	1747	2449	3378	2684	2886
	3	1490	1914	1995	2014	3035	3405	3144	3220
	4	1668	2088	2305	2363	3169	3517	3272	3378

Maximum flow rate for a complete return filter with a pressure drop Δp = 0.5 bar.
The reference fluid has a kinematic viscosity of 30 mm^2/s (cSt) and a density of 0.86 kg/dm^3.
For different pressure drop or fluid viscosity we recommend to use our selection software available on www.mpfiltri.com.
You can also calculate the right size using the formulas present on the FILTER SIZING paragraph at the beginning of the full catalogue or at the beginning of the filter family brochure.
Please, contact our Sales Department for further additional information.

Hydraulic symbols

Filter series	Style 1 connection	Style 2 connections	Style 3 connections
MPH 110	-	•	-
MPH 114	•	-	-
MPH 116	•	-	-
MPH 120	-	-	•
MPH 250	•	•	-
MPH 630	•	•	-
MPH 660	•	-	-
MPH 850	-	•	-

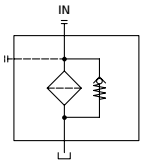

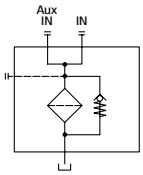

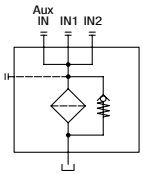

Pressure drop

Filter housings Δp pressure drop

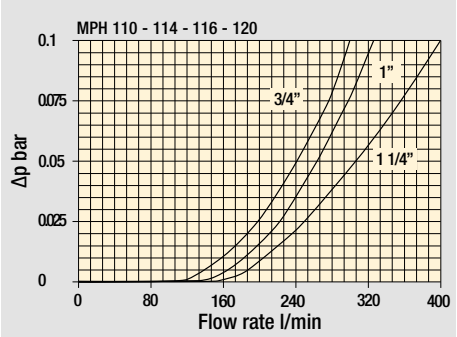

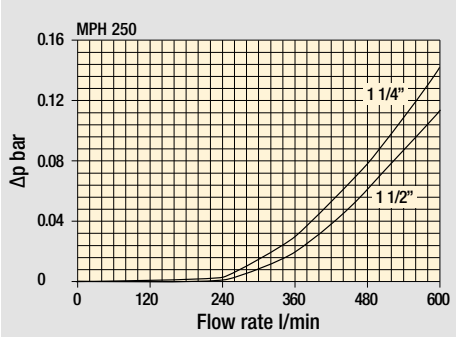

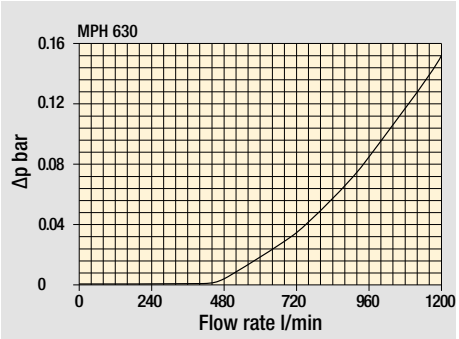

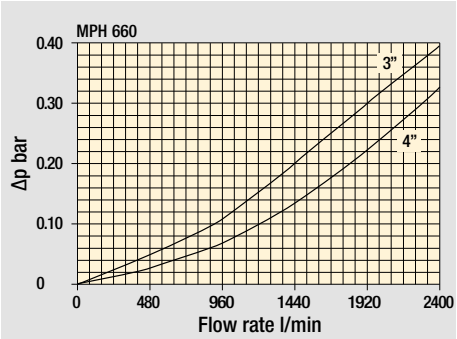

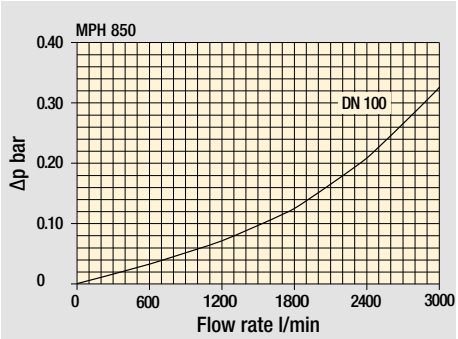

Bypass valve pressure drop

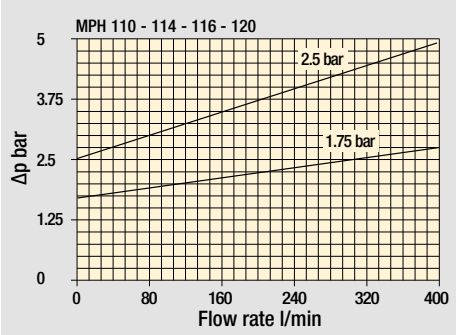

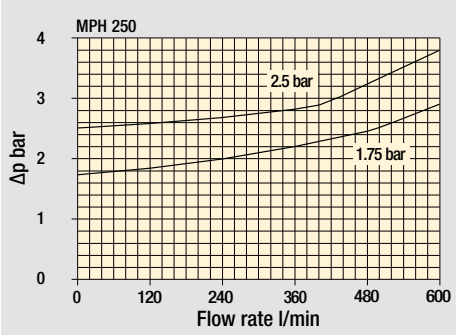

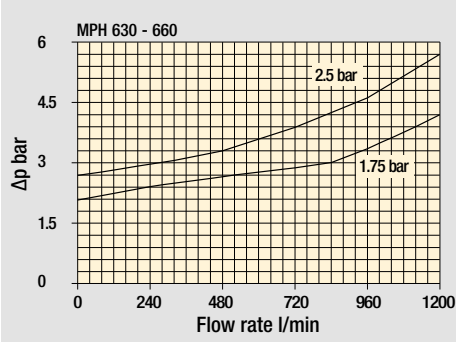

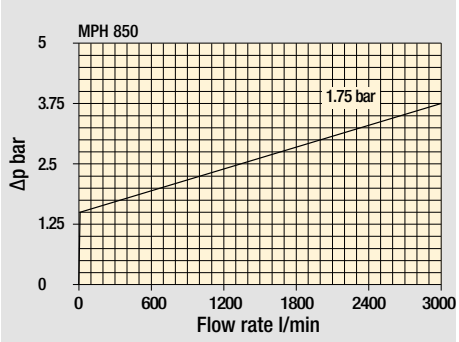

Air breather pressure drop

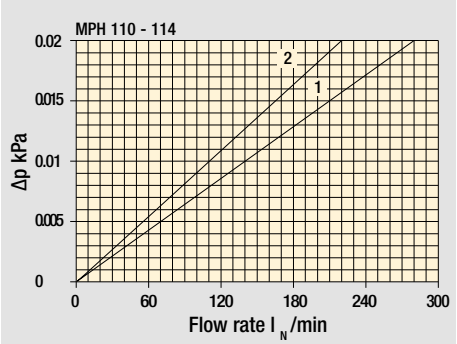

1 C With air breather 10 µm
2 D With anti-splash and SAP50 10 µm

The curves are plotted using mineral oil with density of 0.86 kg/dm³ in compliance with ISO 3968. Δp varies proportionally with density.

MPH MPH110

Designation & Ordering code

COMPLETE FILTER

Configuration example: MPH110 | 1 | S | D | S | A | G1 | 1 | A10 | P01

Series and size

MPH110

Length

1 | **2** | **3** | **4** | **5**

Bypass valve

S Without bypass **C** 1.75 bar **E** 2.5 bar

Diffuser and magnetic filter

D With diffuser, with magnetic filter
F With diffuser, without magnetic filter
O Without diffuser, with magnetic filter
E Without diffuser, without magnetic filter

Air breather

S Without air breather
C With air breather 10 µm
D With anti-splash and air breather SAP050 10 µm
P With anti-splash and air breather SAP050 10 µm pressurization 0.5 bar

Seals and treatments

		Filtration rating Axx	Mxx	Pxx
A	NBR	•	•	•
V	FPM	•	•	•
W	NBR head anodized	•	•	-
Z	FPM head anodized	•	•	-

Main Connections		Aux size 1	Aux size 2
G1	G 3/4”	G 3/8”	G 1/2”
G2	G 1”		
G3	G 1 1/4”		
G4	3/4” NPT	3/8” NPT	1/2” NPT
G5	1” NPT		
G6	1 1/4” NPT		

Main Connections		Aux size 1	Aux size 2
G7	SAE 12 - 1 1/16” - 12 UN	SAE 6 - 9/16” - 18 UNF	SAE 8 - 3/4” - 16 UNF
G8	SAE 16 - 1 5/16” - 12 UN		
G9	SAE 20 - 1 5/8” - 12 UN		

Aux connection - see previous table

0 Not machined **1** Aux size 1 **2** Aux size 2

Filtration rating (filter media)

A03 Inorganic microfiber 3 µm
A06 Inorganic microfiber 6 µm
A10 Inorganic microfiber 10 µm
A16 Inorganic microfiber 16 µm
A25 Inorganic microfiber 25 µm
M25 Wire mesh 25 µm
M60 Wire mesh 60 µm
M90 Wire mesh 90 µm
P10 Resin impregnated paper 10 µm
P25 Resin impregnated paper 25 µm

Execution

P01 MP Filtri standard
Pxx Customized

FILTER ELEMENT

Configuration example: MR100 | 1 | A10 | A | P01

Element series and size

MR100

Element length

1 | **2** | **3** | **4** | **5**

Filtration rating (filter media)

A03 Inorganic microfiber 3 µm
A06 Inorganic microfiber 6 µm
A10 Inorganic microfiber 10 µm
A16 Inorganic microfiber 16 µm
A25 Inorganic microfiber 25 µm
M25 Wire mesh 25 µm
M60 Wire mesh 60 µm
M90 Wire mesh 90 µm
P10 Resin impregnated paper 10 µm
P25 Resin impregnated paper 25 µm

Seals

A NBR
V FPM

Execution

P01 MP Filtri standard
Pxx Customized

CLOGGING INDICATORS

See page 710-711

BVA Axial pressure gauge
BVR Radial pressure gauge
BVP Visual pressure indicator with automatic reset
BVQ Visual pressure indicator with manual reset
BEA Electrical pressure indicator
BEM Electrical pressure indicator
BLA Electrical / visual pressure indicator

ADDITIONAL FEATURES

See page 266

DPT Dipstick

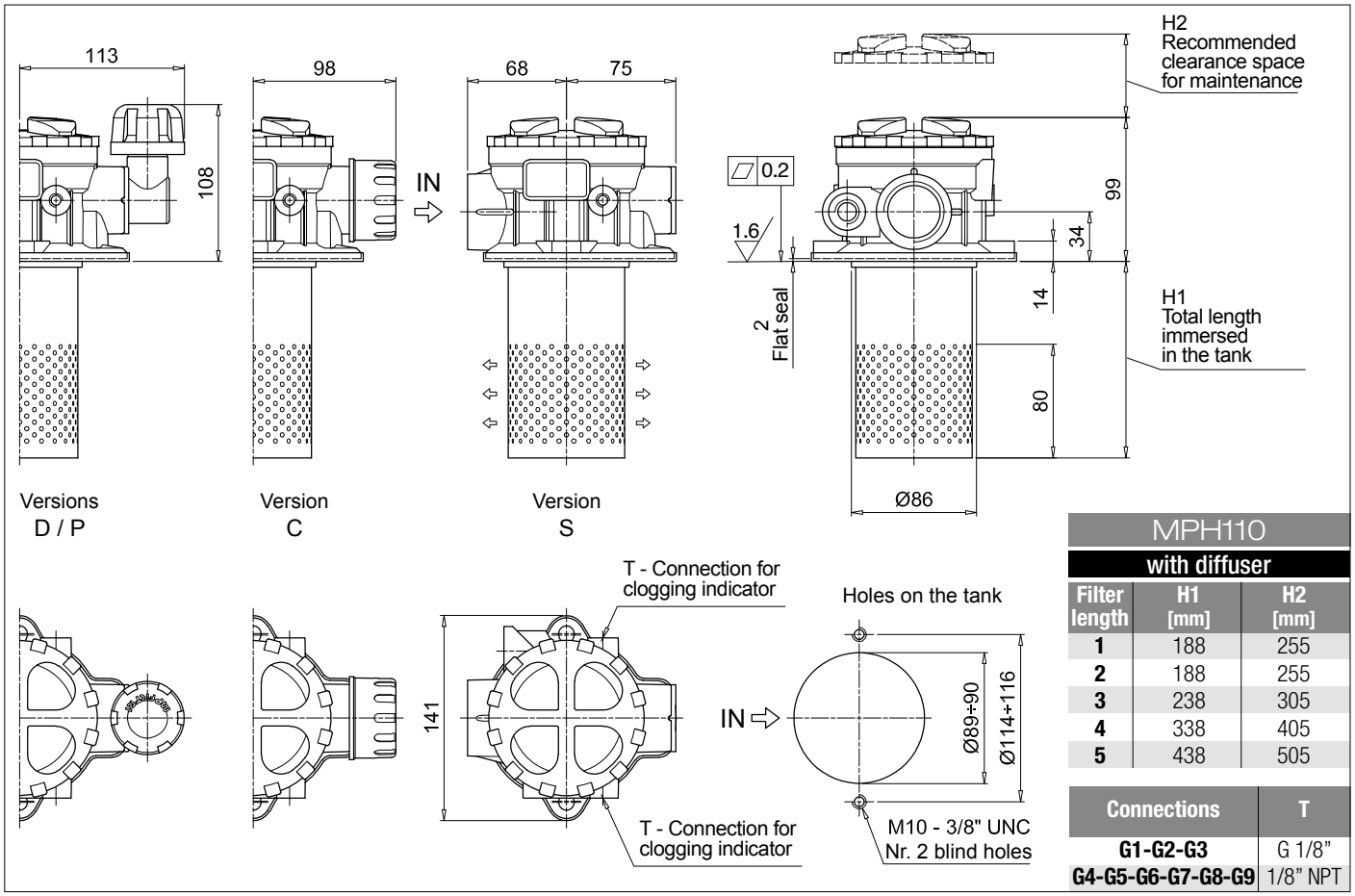

MPH110 with diffuser		
Filter length	H1 [mm]	H2 [mm]
1	188	255
2	188	255
3	238	305
4	338	405
5	438	505

Connections	T
G1-G2-G3	G 1/8"
G4-G5-G6-G7-G8-G9	1/8" NPT

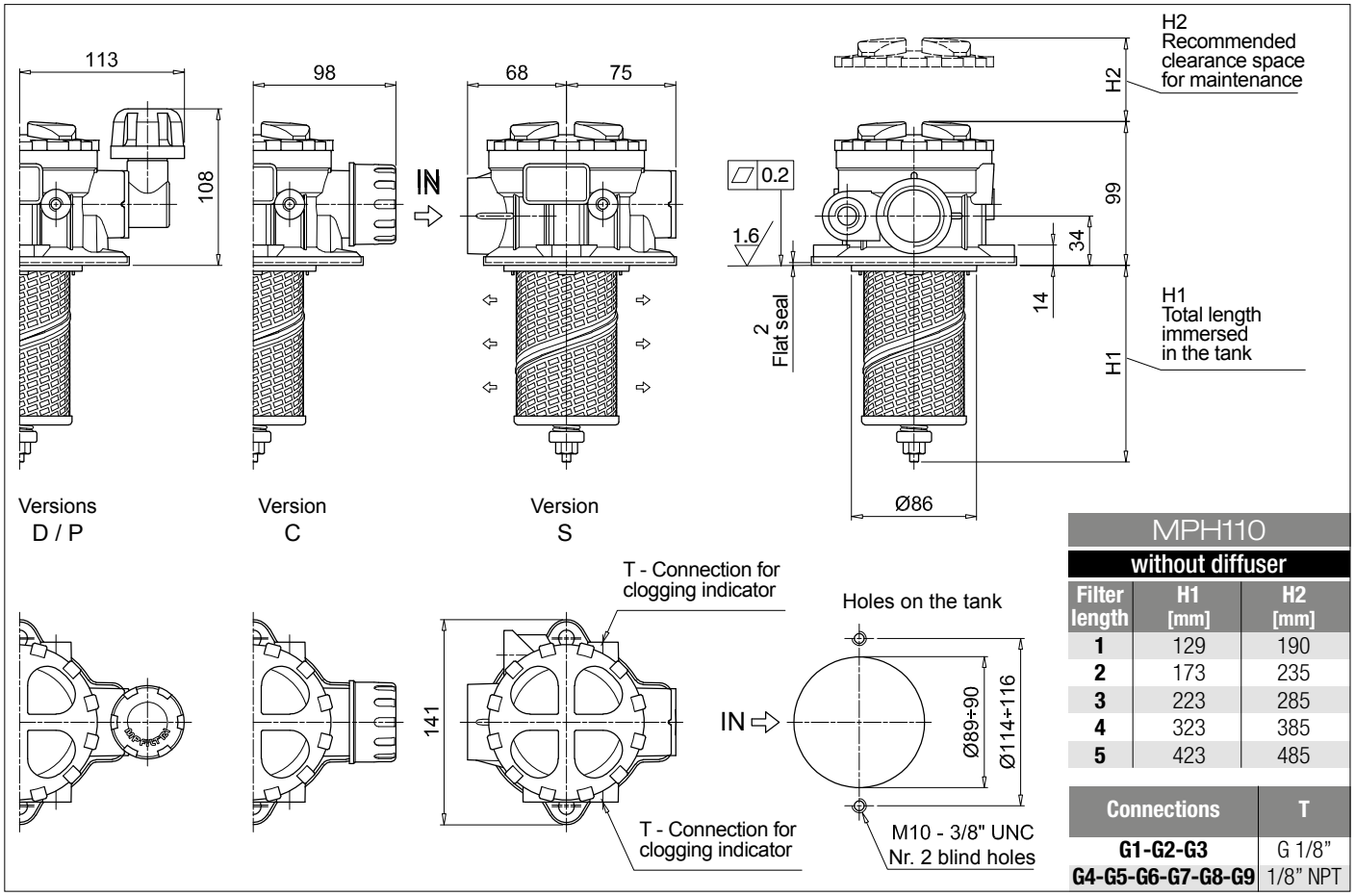

MPH110 without diffuser		
Filter length	H1 [mm]	H2 [mm]
1	129	190
2	173	235
3	223	285
4	323	385
5	423	485

Connections	T
G1-G2-G3	G 1/8"
G4-G5-G6-G7-G8-G9	1/8" NPT

MPH MPH114

Designation & Ordering code

COMPLETE FILTER

Configuration example: MPH114 | 3 | C | E | C | Z | G6 | M60 | P01

Series and size

MPH114

Length

1 | **2** | **3** | **4** | **5** |

Bypass valve

S	Without bypass	**C**	1.75 bar	**E**	2.5 bar

Diffuser and magnetic filter

D	With diffuser, with magnetic filter
F	With diffuser, without magnetic filter
O	Without diffuser, with magnetic filter
E	Without diffuser, without magnetic filter

Air breather

S	Without air breather
C	With air breather 10 µm
D	With anti-splash and air breather SAP050 10 µm
P	With anti-splash and air breather SAP050 10 µm pressurization 0.5 bar

Seals and treatments

		Filtration rating Axx	Mxx	Pxx
A	NBR	•	•	•
V	FPM	•	•	•
W	NBR head anodized	•	•	-
Z	FPM head anodized	•	•	-

Connections

G1	G 3/4”	**G6**	1 1/4” NPT
G2	G 1”	**G7**	SAE 12 - 1 1/16” - 12 UN
G3	G 1 1/4”	**G8**	SAE 16 - 1 5/16” - 12 UN
G4	3/4” NPT	**G9**	SAE 20 - 1 5/8” - 12 UN
G5	1” NPT		

Filtration rating (filter media)

A03	Inorganic microfiber 3 µm	**M25**	Wire mesh 25 µm
A06	Inorganic microfiber 6 µm	**M60**	Wire mesh 60 µm
A10	Inorganic microfiber 10 µm	**M90**	Wire mesh 90 µm
A16	Inorganic microfiber 16 µm	**P10**	Resin impregnated paper 10 µm
A25	Inorganic microfiber 25 µm	**P25**	Resin impregnated paper 25 µm

Execution

P01	MP Filtri standard
Pxx	Customized

FILTER ELEMENT

Configuration example: MR100 | 3 | M60 | V | P01

Element series and size

MR100

Element length

1 | **2** | **3** | **4** | **5** |

Filtration rating (filter media)

A03	Inorganic microfiber 3 µm	**M25**	Wire mesh 25 µm
A06	Inorganic microfiber 6 µm	**M60**	Wire mesh 60 µm
A10	Inorganic microfiber 10 µm	**M90**	Wire mesh 90 µm
A16	Inorganic microfiber 16 µm	**P10**	Resin impregnated paper 10 µm
A25	Inorganic microfiber 25 µm	**P25**	Resin impregnated paper 25 µm

Seals

A	NBR
V	FPM

Execution

P01	MP Filtri standard
Pxx	Customized

CLOGGING INDICATORS

See page 710-711

BVA	Axial pressure gauge	**BEA**	Electrical pressure indicator
BVR	Radial pressure gauge	**BEM**	Electrical pressure indicator
BVP	Visual pressure indicator with automatic reset	**BLA**	Electrical / visual pressure indicator
BVQ	Visual pressure indicator with manual reset		

ADDITIONAL FEATURES

See page 266

DPT	Dipstick

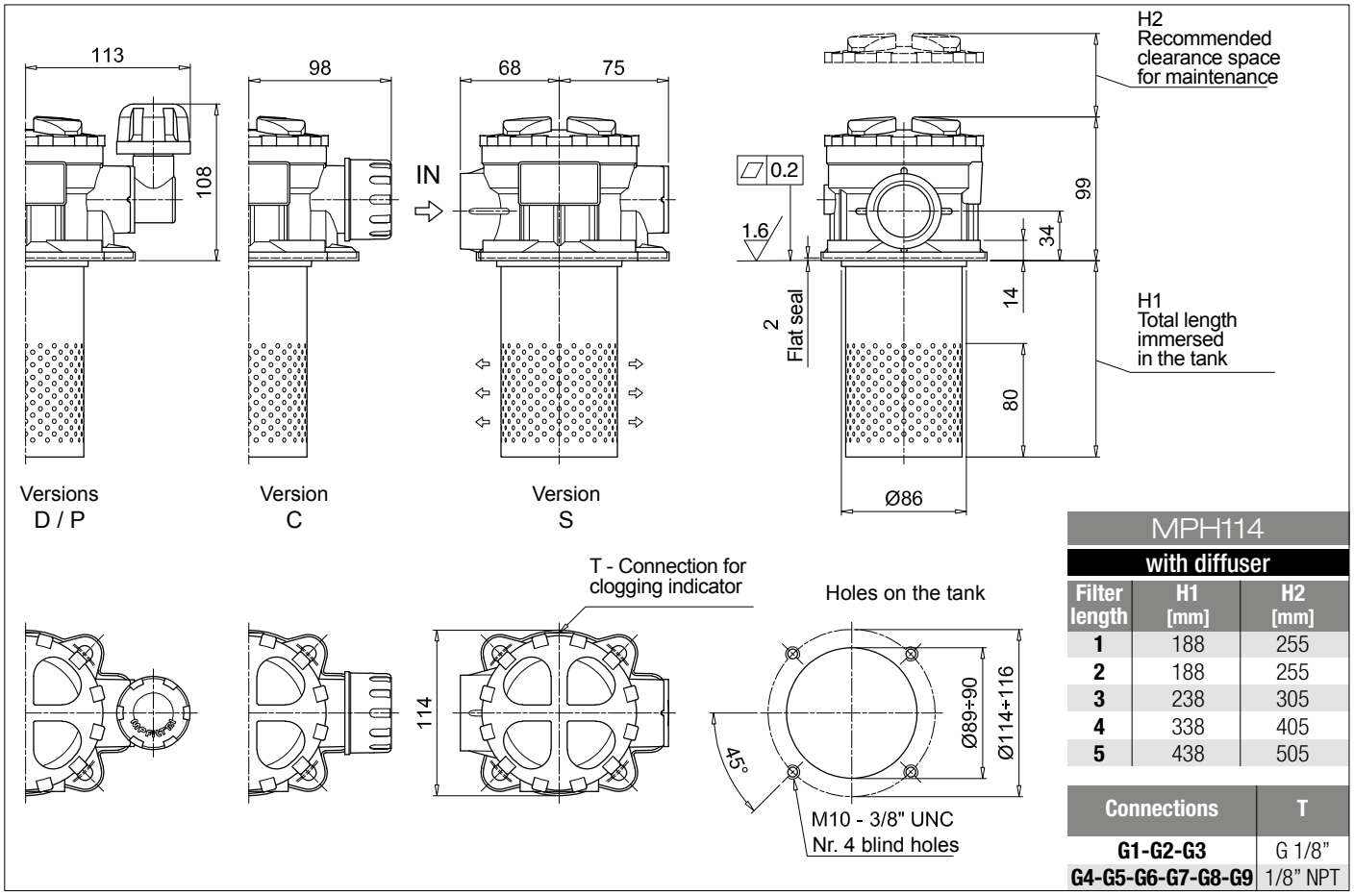

MPH114 with diffuser		
Filter length	H1 [mm]	H2 [mm]
1	188	255
2	188	255
3	238	305
4	338	405
5	438	505

Connections	T
G1-G2-G3	G 1/8"
G4-G5-G6-G7-G8-G9	1/8" NPT

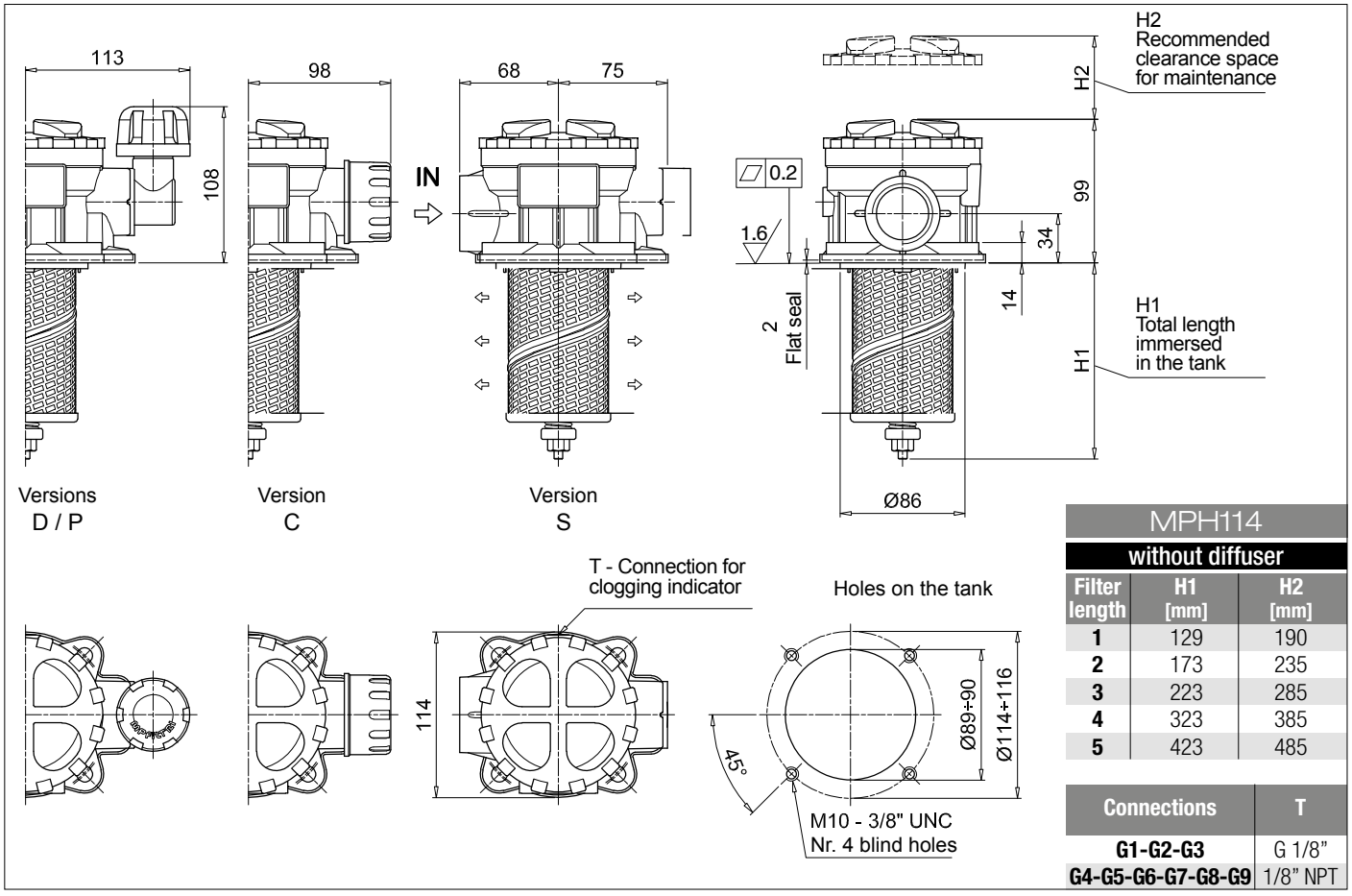

MPH114 without diffuser		
Filter length	H1 [mm]	H2 [mm]
1	129	190
2	173	235
3	223	285
4	323	385
5	423	485

Connections	T
G1-G2-G3	G 1/8"
G4-G5-G6-G7-G8-G9	1/8" NPT

MPH MPH116

Designation & Ordering code

COMPLETE FILTER

Configuration example: MPH116 | 5 | S | D | S | A | G1 | A10 | P01

Series and size

MPH116

Length

1 | **2** | **3** | **4** | **5** |

Bypass valve

S Without bypass **C** 1.75 bar **E** 2.5 bar

Diffuser and magnetic filter

D With diffuser, with magnetic filter
F With diffuser, without magnetic filter
O Without diffuser, with magnetic filter
E Without diffuser, without magnetic filter

Air breather

S Without air breather

Seals and treatments

		Filtration rating Axx	Mxx	Pxx
A	NBR	•	•	•
V	FPM	•	•	•
W	NBR head anodized	•	•	-
Z	FPM head anodized	•	•	-

Flat seal on the head on request

Connections

G1	G 3/4"	**G6**	1 1/4" NPT
G2	G 1"	**G7**	SAE 12 - 1 1/16" - 12 UN
G3	G 1 1/4"	**G8**	SAE 16 - 1 5/16" - 12 UN
G4	3/4" NPT	**G9**	SAE 20 - 1 5/8" - 12 UN
G5	1" NPT		

Filtration rating (filter media)

A03	Inorganic microfiber 3 µm	**M25**	Wire mesh 25 µm
A06	Inorganic microfiber 6 µm	**M60**	Wire mesh 60 µm
A10	Inorganic microfiber 10 µm	**M90**	Wire mesh 90 µm
A16	Inorganic microfiber 16 µm	**P10**	Resin impregnated paper 10 µm
A25	Inorganic microfiber 25 µm	**P25**	Resin impregnated paper 25 µm

Execution

P01 MP Filtri standard
Pxx Customized

FILTER ELEMENT

Configuration example: MR100 | 5 | A10 | A | P01

Element series and size

MR100

Element length

1 | **2** | **3** | **4** | **5** |

Filtration rating (filter media)

A03	Inorganic microfiber 3 µm	**M25**	Wire mesh 25 µm
A06	Inorganic microfiber 6 µm	**M60**	Wire mesh 60 µm
A10	Inorganic microfiber 10 µm	**M90**	Wire mesh 90 µm
A16	Inorganic microfiber 16 µm	**P10**	Resin impregnated paper 10 µm
A25	Inorganic microfiber 25 µm	**P25**	Resin impregnated paper 25 µm

Seals

A NBR
V FPM

Execution

P01 MP Filtri standard
Pxx Customized

CLOGGING INDICATORS

See page 710-711

BVA Axial pressure gauge
BVR Radial pressure gauge
BVP Visual pressure indicator with automatic reset
BVQ Visual pressure indicator with manual reset
BEA Electrical pressure indicator
BEM Electrical pressure indicator
BLA Electrical / visual pressure indicator

ADDITIONAL FEATURES

See page 266

DPT Dipstick

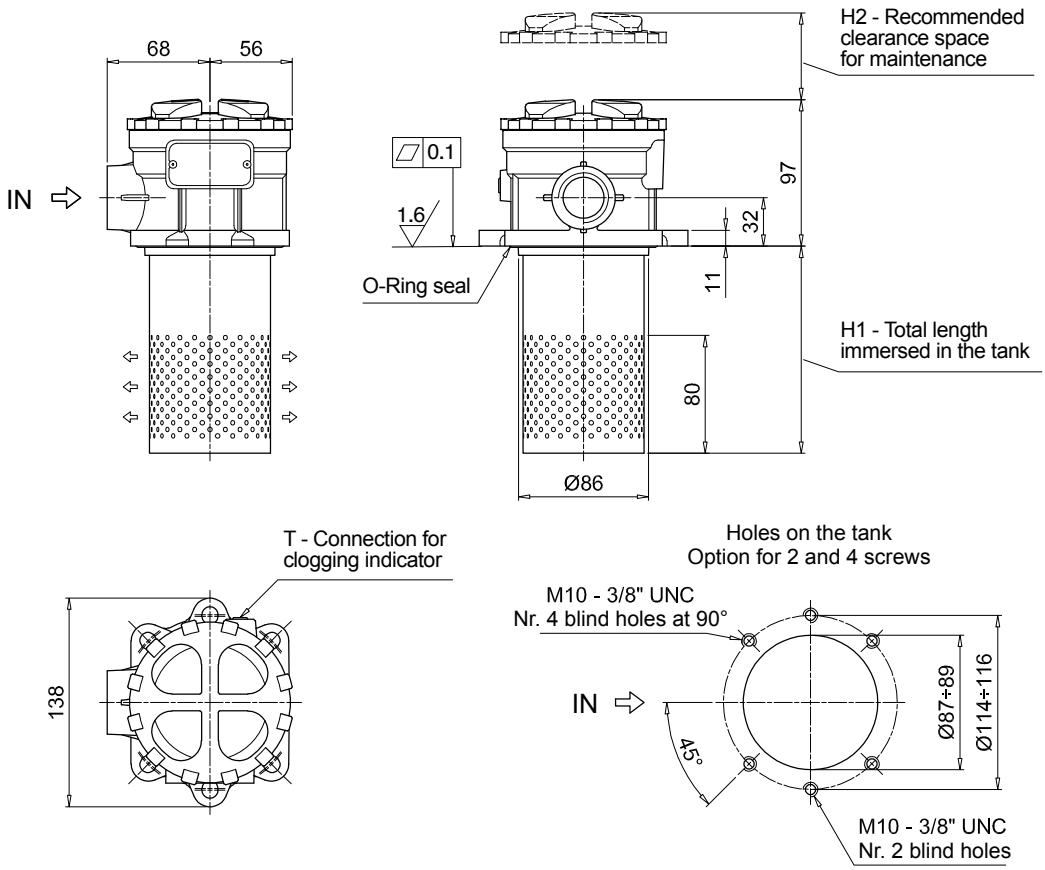

MPH116 with diffuser		
Filter length	H1 [mm]	H2 [mm]
1	190	255
2	190	255
3	240	305
4	340	405
5	440	505

Connections	T
G1-G2-G3	G 1/8"
G4-G5-G6-G7-G8-G9	1/8" NPT

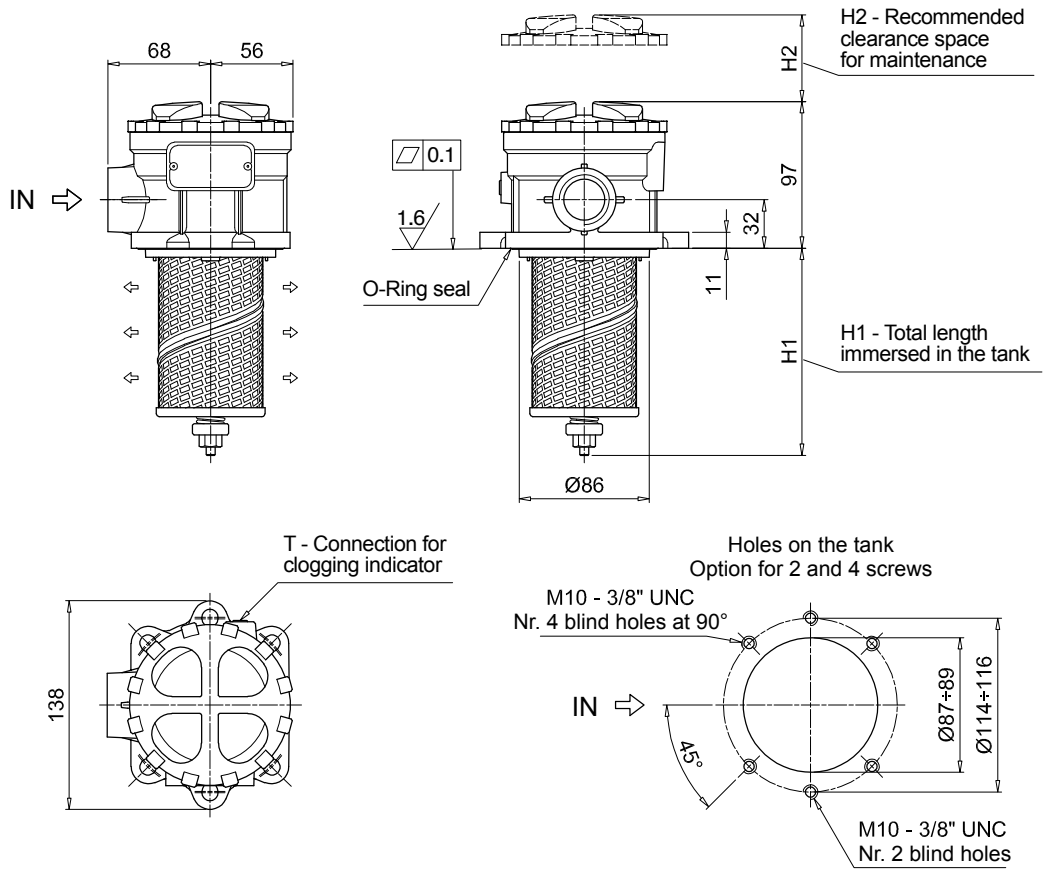

MPH116 without diffuser		
Filter length	H1 [mm]	H2 [mm]
1	131	190
2	175	235
3	225	285
4	325	385
5	425	485

Connections	T
G1-G2-G3	G 1/8"
G4-G5-G6-G7-G8-G9	1/8" NPT

MPH MPH120

Designation & Ordering code

COMPLETE FILTER

Configuration example: MPH120 | 1 | S | D | A | G1 | 1 | A10 | P01

Series and size

MPH120

Length

1 | **2** | **3** | **4** | **5** |

Bypass valve

S	Without bypass	**C**	1.75 bar	**E**	2.5 bar

Diffuser and magnetic filter

D With diffuser, with magnetic filter
F With diffuser, without magnetic filter
O Without diffuser, with magnetic filter
E Without diffuser, without magnetic filter

Seals and treatments		Filtration rating Axx	Mxx	Pxx
A	NBR	•	•	•
V	FPM	•	•	•
W	NBR head anodized	•	•	-
Z	FPM head anodized	•	•	-

Main Connections		Rear connections	Aux size 1	Aux size 2
G1	G 3/4”	G 3/4”	G 3/8”	G 1/2”
G2	G 1”	G 1”		
G3	G 1 1/4”	G 3/4”		
G4	3/4” NPT	3/4” NPT	3/8” NPT	1/2” NPT
G5	1” NPT	1” NPT		
G6	1 1/4” NPT	3/4” NPT		
G7	SAE 12 - 1 1/16” - 12 UN	SAE 12 - 1 1/16” - 12 UN	SAE 6 - 9/16” - 18 UNF	SAE 8 - 3/4” - 16 UNF
G8	SAE 16 - 1 5/16” - 12 UN	SAE 16 - 1 5/16” - 12 UN		
G9	SAE 20 - 1 5/8” - 12 UN	SAE 12 - 1 1/16” - 12 UN		

Aux connection - see previous table

0	Not machined	**1**	Aux size 1	**2**	Aux size 2

Filtration rating (filter media)

A03	Inorganic microfiber 3 µm	**M25**	Wire mesh 25 µm
A06	Inorganic microfiber 6 µm	**M60**	Wire mesh 60 µm
A10	Inorganic microfiber 10 µm	**M90**	Wire mesh 90 µm
A16	Inorganic microfiber 16 µm	**P10**	Resin impregnated paper 10 µm
A25	Inorganic microfiber 25 µm	**P25**	Resin impregnated paper 25 µm

Execution

P01 MP Filtri standard
Pxx Customized

FILTER ELEMENT

Configuration example: MR100 | 1 | A10 | A | P01

Element series and size

MR100

Element length

1 | **2** | **3** | **4** | **5** |

Filtration rating (filter media)

A03	Inorganic microfiber 3 µm	**M25**	Wire mesh 25 µm
A06	Inorganic microfiber 6 µm	**M60**	Wire mesh 60 µm
A10	Inorganic microfiber 10 µm	**M90**	Wire mesh 90 µm
A16	Inorganic microfiber 16 µm	**P10**	Resin impregnated paper 10 µm
A25	Inorganic microfiber 25 µm	**P25**	Resin impregnated paper 25 µm

Seals

A NBR
V FPM

Execution

P01 MP Filtri standard
Pxx Customized

CLOGGING INDICATORS

See page 710-711

BVA Axial pressure gauge
BVR Radial pressure gauge
BVP Visual pressure indicator with automatic reset
BVQ Visual pressure indicator with manual reset
BEA Electrical pressure indicator
BEM Electrical pressure indicator
BLA Electrical / visual pressure indicator

ADDITIONAL FEATURES

See page 266

DPT Dipstick

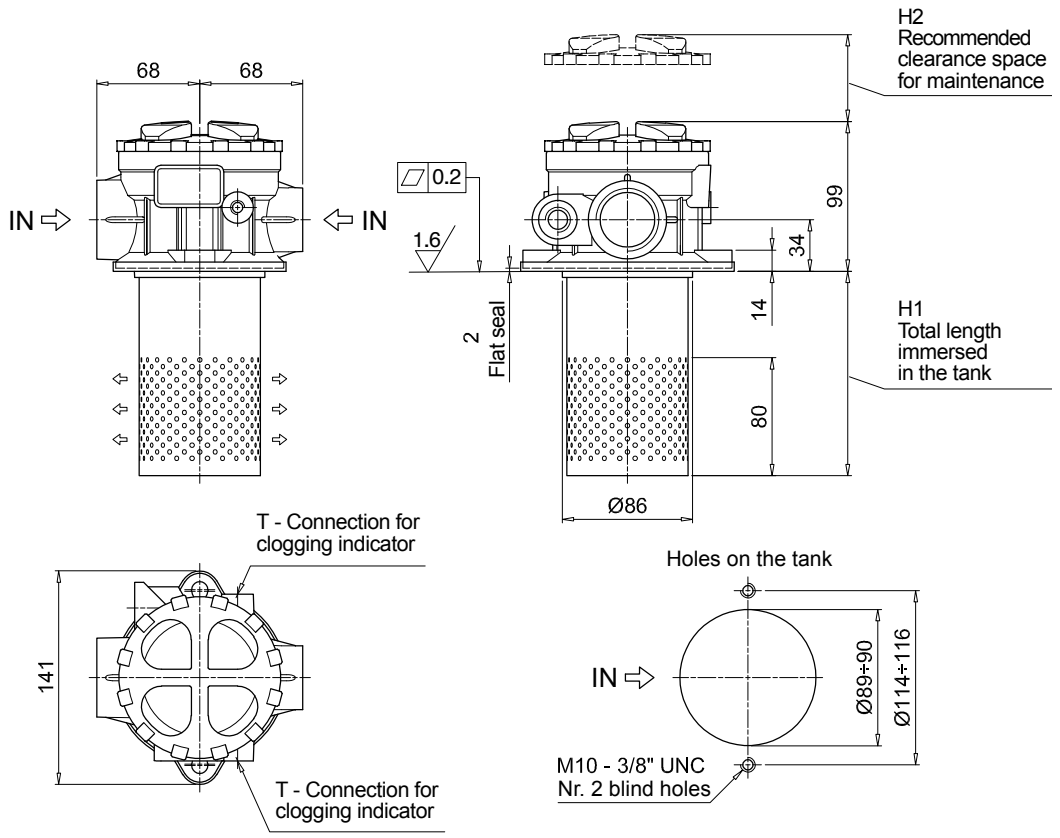

MPH120 with diffuser		
Filter length	H1 [mm]	H2 [mm]
1	188	255
2	188	255
3	238	305
4	338	405
5	438	505

Connections	T
G1-G2-G3	G 1/8"
G4-G5-G6-G7-G8-G9	1/8" NPT

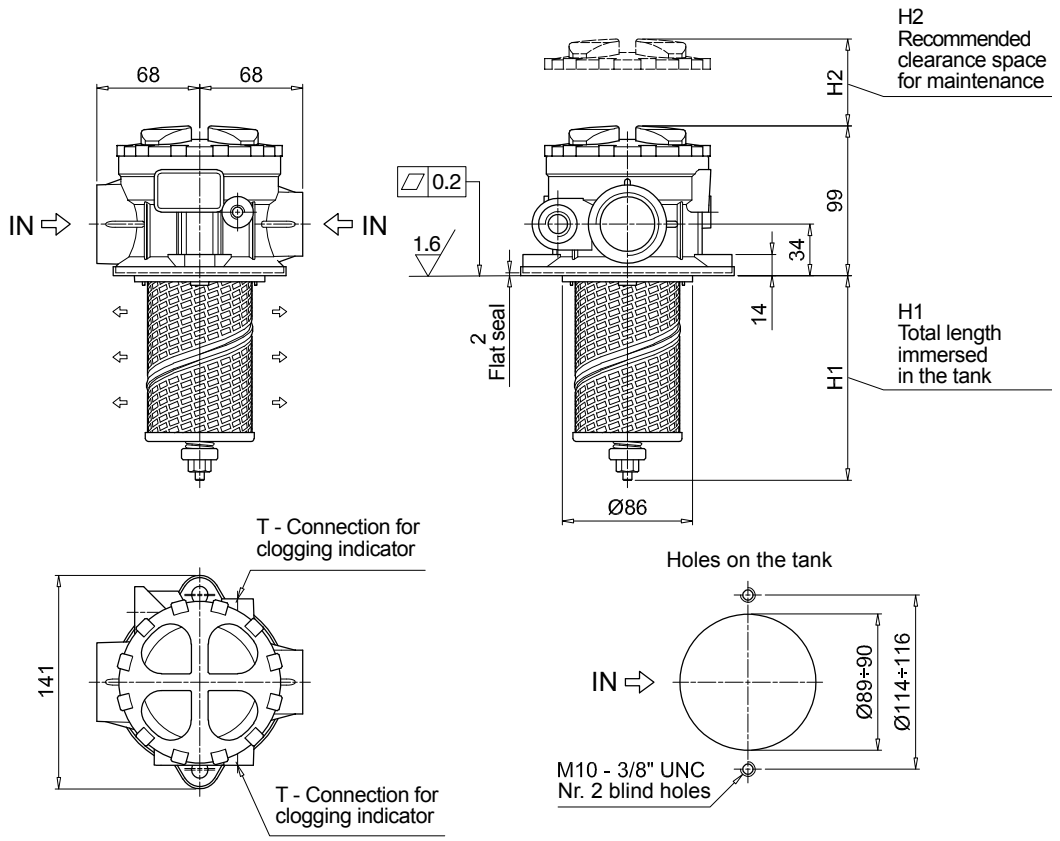

MPH120 without diffuser		
Filter length	H1 [mm]	H2 [mm]
1	129	190
2	173	235
3	223	285
4	323	385
5	423	485

Connections	T
G1-G2-G3	G 1/8"
G4-G5-G6-G7-G8-G9	1/8" NPT

MPH MPH250

Designation & Ordering code

COMPLETE FILTER

Configuration example: MPH250 | 1 | C | D | S | A | G1 | A10 | P01

Series and size

MPH250

Length

1 | **2** | **3** | **4** |

Bypass valve

S	Without bypass	**C**	1.75 bar	**E**	2.5 bar

Diffuser and magnetic filter

D	With diffuser, with magnetic filter
F	With diffuser, without magnetic filter
O	Without diffuser, with magnetic filter
E	Without diffuser, without magnetic filter

Air breather

S	Without air breather

Seals and treatments		Filtration rating Axx	Mxx	Pxx
A	NBR	•	•	•
V	FPM	•	•	•
W	NBR head anodized	•	•	-
Z	FPM head anodized	•	•	-

Main Connections		Rear connections
G1	G 1 1/2”	-
G2	G 1 1/2”	G 1 1/4”
G4	1 1/2” NPT	-
G5	1 1/2” NPT	1 1/4” NPT
G7	SAE 24 - 1 7/8” - 12 UN	-
G8	SAE 24 - 1 7/8” - 12 UN	SAE 20 - 1 5/8” - 12 UN
F1	1 1/2” SAE 3000 psi/M	-
F2	1 1/2” SAE 3000 psi/M	1 1/4” SAE 3000 psi/M
F3	1 1/2” SAE 3000 psi/UNC	-
F4	1 1/2” SAE 3000 psi/UNC	1 1/4” SAE 3000 psi/UNC

Filtration rating (filter media)

A03	Inorganic microfiber 3 µm	**M25**	Wire mesh 25 µm
A06	Inorganic microfiber 6 µm	**M60**	Wire mesh 60 µm
A10	Inorganic microfiber 10 µm	**M90**	Wire mesh 90 µm
A16	Inorganic microfiber 16 µm	**P10**	Resin impregnated paper 10 µm
A25	Inorganic microfiber 25 µm	**P25**	Resin impregnated paper 25 µm

Execution

P01	MP Filtri standard
Pxx	Customized

FILTER ELEMENT

Configuration example: MR250 | 1 | A10 | A | P01

Element series and size

MR250

Element length

1 | **2** | **3** | **4** |

Filtration rating (filter media)

A03	Inorganic microfiber 3 µm	**M25**	Wire mesh 25 µm
A06	Inorganic microfiber 6 µm	**M60**	Wire mesh 60 µm
A10	Inorganic microfiber 10 µm	**M90**	Wire mesh 90 µm
A16	Inorganic microfiber 16 µm	**P10**	Resin impregnated paper 10 µm
A25	Inorganic microfiber 25 µm	**P25**	Resin impregnated paper 25 µm

Seals

A	NBR
V	FPM

Execution

P01	MP Filtri standard
Pxx	Customized

CLOGGING INDICATORS

See page 710-711

BVA	Axial pressure gauge	**BEA**	Electrical pressure indicator
BVR	Radial pressure gauge	**BEM**	Electrical pressure indicator
BVP	Visual pressure indicator with automatic reset	**BLA**	Electrical / visual pressure indicator
BVQ	Visual pressure indicator with manual reset		

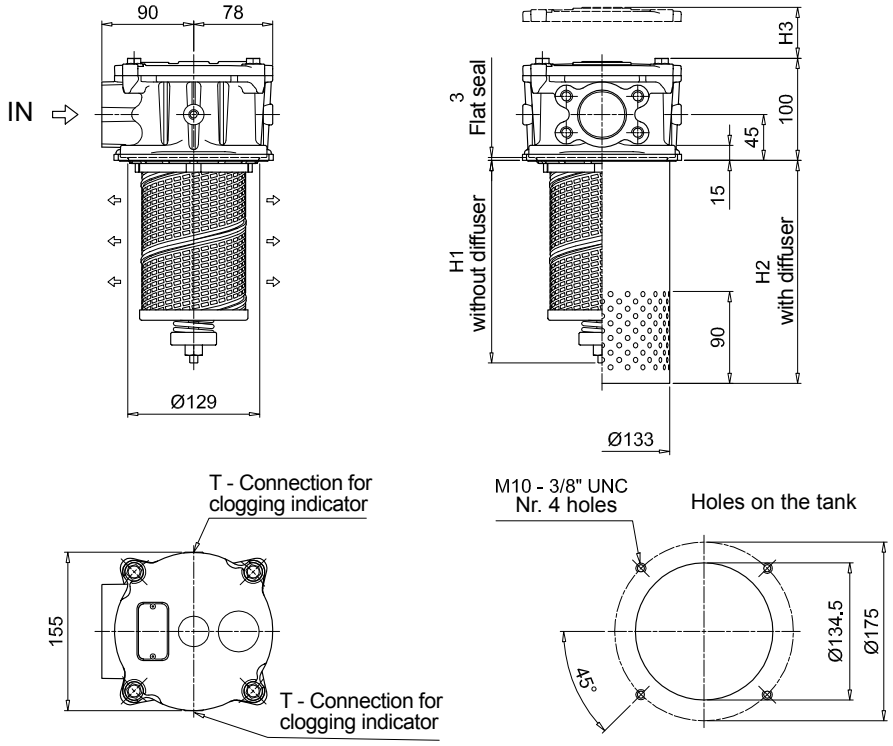

MPH250			
1 connection port			
Filter length	H1 [mm]	H2 [mm]	H3 [mm]
1	182	247	255
2	231	247	305
3	302	317	375
4	502	507	580

Connections	T
G1-G2-G3	G 1/8"
G4-G5-G6-G7-G8-G9	1/8" NPT
F1-F2	G 1/8"
F3-F4	1/8" NPT

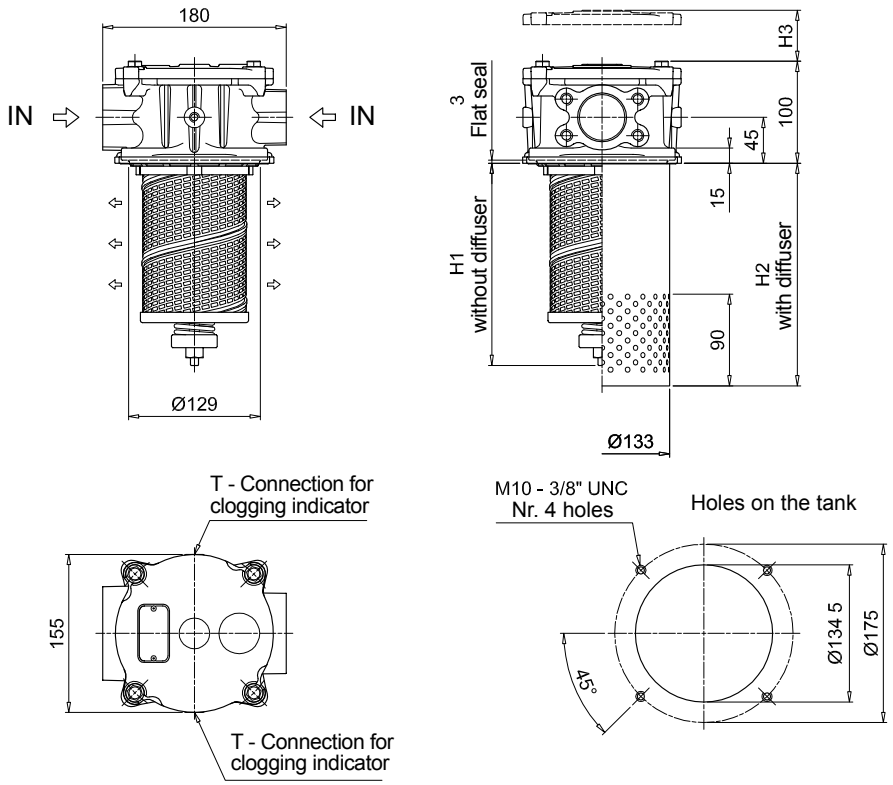

MPH250			
2 connection ports			
Filter length	H1 [mm]	H2 [mm]	H3 [mm]
1	182	247	255
2	231	247	305
3	302	317	375
4	502	507	580

Connections	T
G1-G2-G3	G 1/8"
G4-G5-G6-G7-G8-G9	1/8" NPT
F1-F2	G 1/8"
F3-F4	1/8" NPT

MPH MPH630

Designation & Ordering code

COMPLETE FILTER

Configuration example: MPH630 | 1 | S | E | S | W | F1 | M25 | P01

Series and size

MPH630

Length

1 | **2** | **3** | **4** | **5** |

Bypass valve

S	Without bypass	**C**	1.75 bar	**E**	2.5 bar

Diffuser and magnetic filter

D	With diffuser, with magnetic filter
F	With diffuser, without magnetic filter
O	Without diffuser, with magnetic filter
E	Without diffuser, without magnetic filter

Air breather

S	Without air breather

Seals and treatments		Filtration rating Axx	Mxx	Pxx
A	NBR	•	•	•
V	FPM	•	•	•
W	NBR head anodized	•	•	-
Z	FPM head anodized	•	•	-

Main Connections		Rear connections
F1	2 1/2" SAE 3000 psi/M	-
F2	2 1/2" SAE 3000 psi/M	2" SAE 3000 psi/M
F3	2 1/2" SAE 3000 psi/UNC	-
F4	2 1/2" SAE 3000 psi/UNC	2" SAE 3000 psi/UNC

Filtration rating (filter media)

A03	Inorganic microfiber 3 µm	**M25**	Wire mesh 25 µm
A06	Inorganic microfiber 6 µm	**M60**	Wire mesh 60 µm
A10	Inorganic microfiber 10 µm	**M90**	Wire mesh 90 µm
A16	Inorganic microfiber 16 µm	**P10**	Resin impregnated paper 10 µm
A25	Inorganic microfiber 25 µm	**P25**	Resin impregnated paper 25 µm

Execution

P01	MP Filtri standard
Pxx	Customized

FILTER ELEMENT

Configuration example: MR630 | 1 | M25 | A | P01

Element series and size

MR630

Element length

1 | **2** | **3** | **4** | **5** |

Filtration rating (filter media)

A03	Inorganic microfiber 3 µm	**M25**	Wire mesh 25 µm
A06	Inorganic microfiber 6 µm	**M60**	Wire mesh 60 µm
A10	Inorganic microfiber 10 µm	**M90**	Wire mesh 90 µm
A16	Inorganic microfiber 16 µm	**P10**	Resin impregnated paper 10 µm
A25	Inorganic microfiber 25 µm	**P25**	Resin impregnated paper 25 µm

Seals

A	NBR
V	FPM

Execution

P01	MP Filtri standard
Pxx	Customized

CLOGGING INDICATORS

See page 710-711

BVA	Axial pressure gauge	**BEA**	Electrical pressure indicator
BVR	Radial pressure gauge	**BEM**	Electrical pressure indicator
BVP	Visual pressure indicator with automatic reset	**BLA**	Electrical / visual pressure indicator
BVQ	Visual pressure indicator with manual reset		

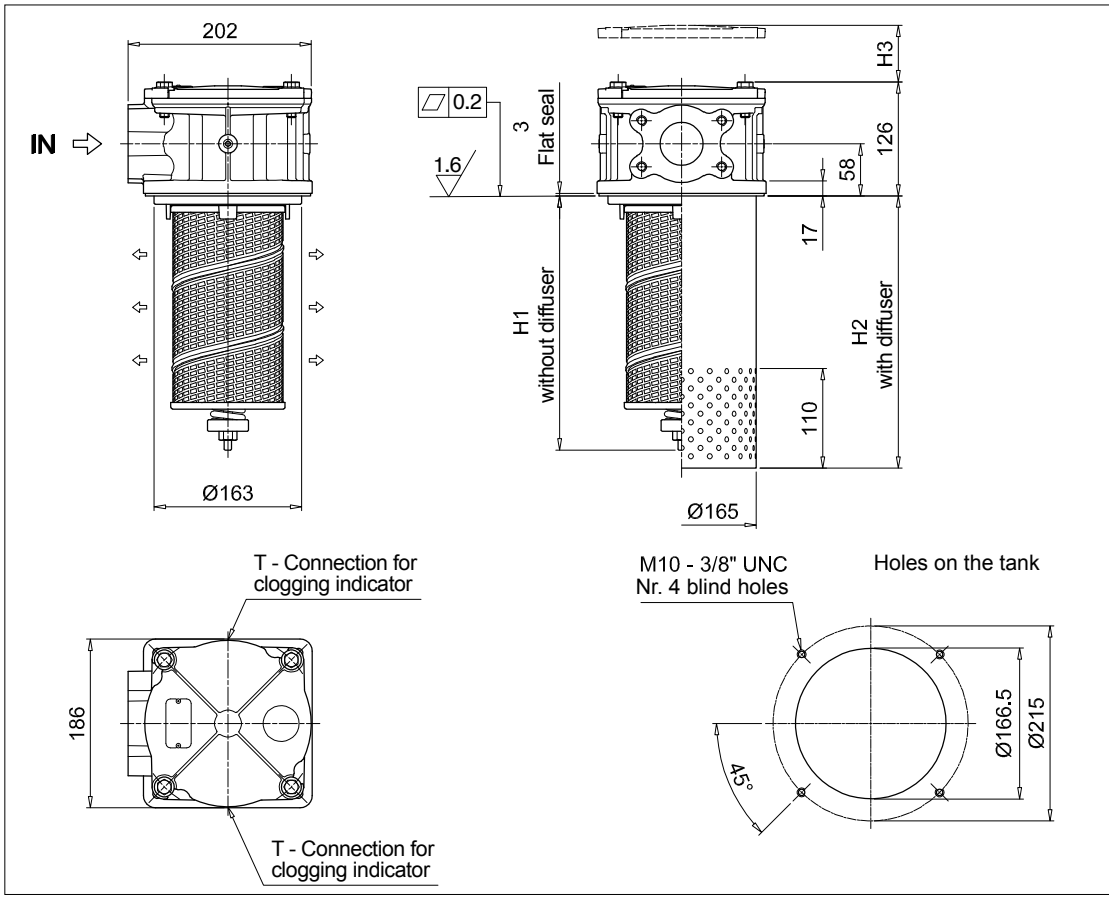

MPH630			
1 connection port			
Filter length	**H1 [mm]**	**H2 [mm]**	**H3 [mm]**
1	260	278	330
2	340	358	410
3	440	458	510
4	528	548	600
5	829	848	900

Connections	T
F1	G 1/8"
F3	1/8" NPT

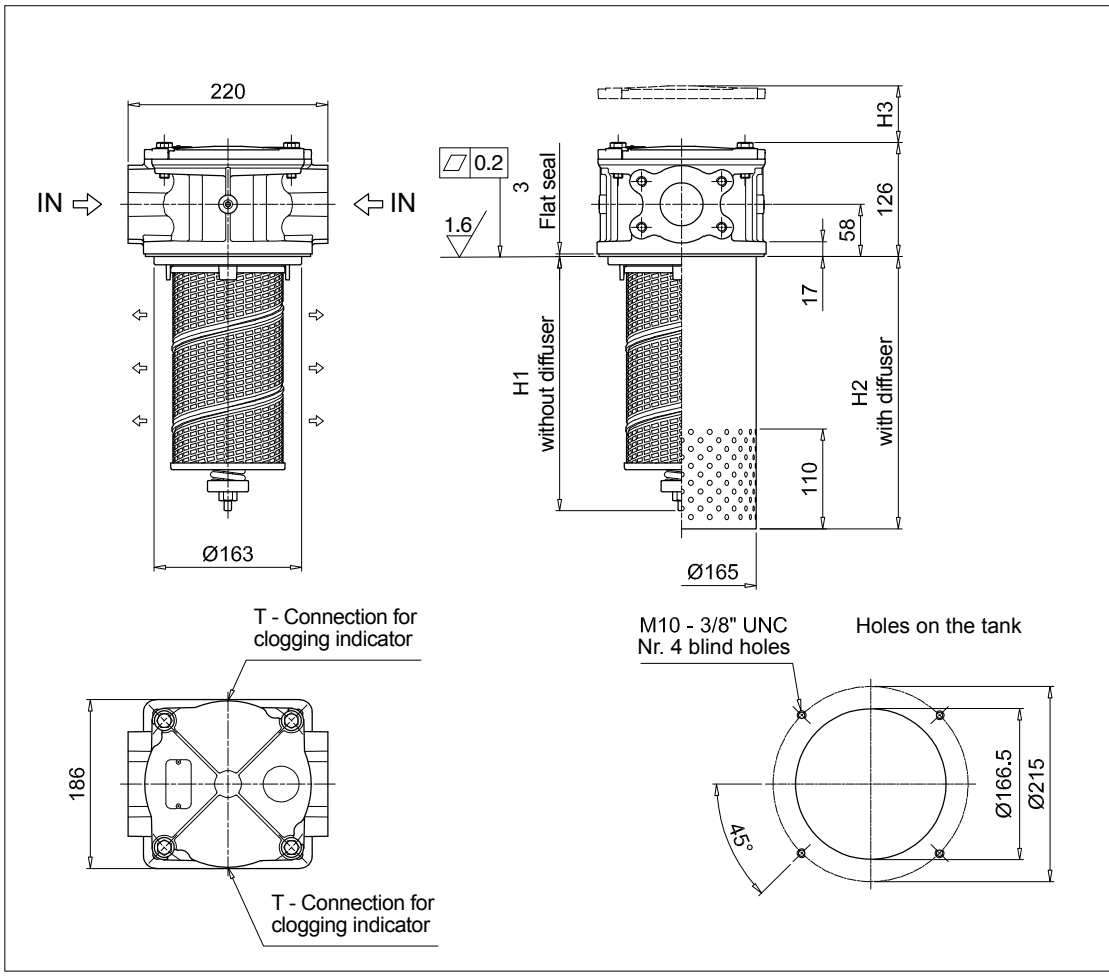

MPH630			
2 connection ports			
Filter length	**H1 [mm]**	**H2 [mm]**	**H3 [mm]**
1	260	278	330
2	340	358	410
3	440	458	510
4	528	548	600
5	829	848	900

Connections	T
F2	G 1/8"
F4	1/8" NPT

MPH MPH660

Designation & Ordering code

COMPLETE FILTER

Configuration example: MPH660 | 4 | C | D | S | A | F2 | A10 | P01

Series and size

MPH660

Length

4 | **5**

Bypass valve

S	Without bypass	**C**	1.75 bar	**E**	2.5 bar

Diffuser and magnetic filter

D With diffuser, with magnetic filter
F With diffuser, without magnetic filter
O Without diffuser, with magnetic filter
E Without diffuser, without magnetic filter

Air breather

S Without air breather

Seals and treatments

		Filtration rating Axx	Mxx	Pxx
A	NBR	•	•	•
V	FPM	•	•	•
W	NBR head anodized	•	•	-
Z	FPM head anodized	•	•	-

Main Connections

F1 3” SAE 3000 psi/M
F2 4” SAE 3000 psi/M

Filtration rating (filter media)

A03	Inorganic microfiber 3 µm	**M25**	Wire mesh 25 µm
A06	Inorganic microfiber 6 µm	**M60**	Wire mesh 60 µm
A10	Inorganic microfiber 10 µm	**M90**	Wire mesh 90 µm
A16	Inorganic microfiber 16 µm	**P10**	Resin impregnated paper 10 µm
A25	Inorganic microfiber 25 µm	**P25**	Resin impregnated paper 25 µm

Execution

P01 MP Filtri standard
Pxx Customized

FILTER ELEMENT

Configuration example: MR630 | 5 | M25 | A | P01

Element series and size

MR630

Element length

4 | **5**

Filtration rating (filter media)

A03	Inorganic microfiber 3 µm	**M25**	Wire mesh 25 µm
A06	Inorganic microfiber 6 µm	**M60**	Wire mesh 60 µm
A10	Inorganic microfiber 10 µm	**M90**	Wire mesh 90 µm
A16	Inorganic microfiber 16 µm	**P10**	Resin impregnated paper 10 µm
A25	Inorganic microfiber 25 µm	**P25**	Resin impregnated paper 25 µm

Seals

A NBR
V FPM

Execution

P01 MP Filtri standard
Pxx Customized

CLOGGING INDICATORS

See page 710-711

BVA Axial pressure gauge
BVR Radial pressure gauge
BVP Visual pressure indicator with automatic reset
BVQ Visual pressure indicator with manual reset
BEA Electrical pressure indicator
BEM Electrical pressure indicator
BLA Electrical / visual pressure indicator

MPH660			
Filter length	H1 [mm]	H2 [mm]	H3 [mm]
4	538	548	610
5	838	848	910

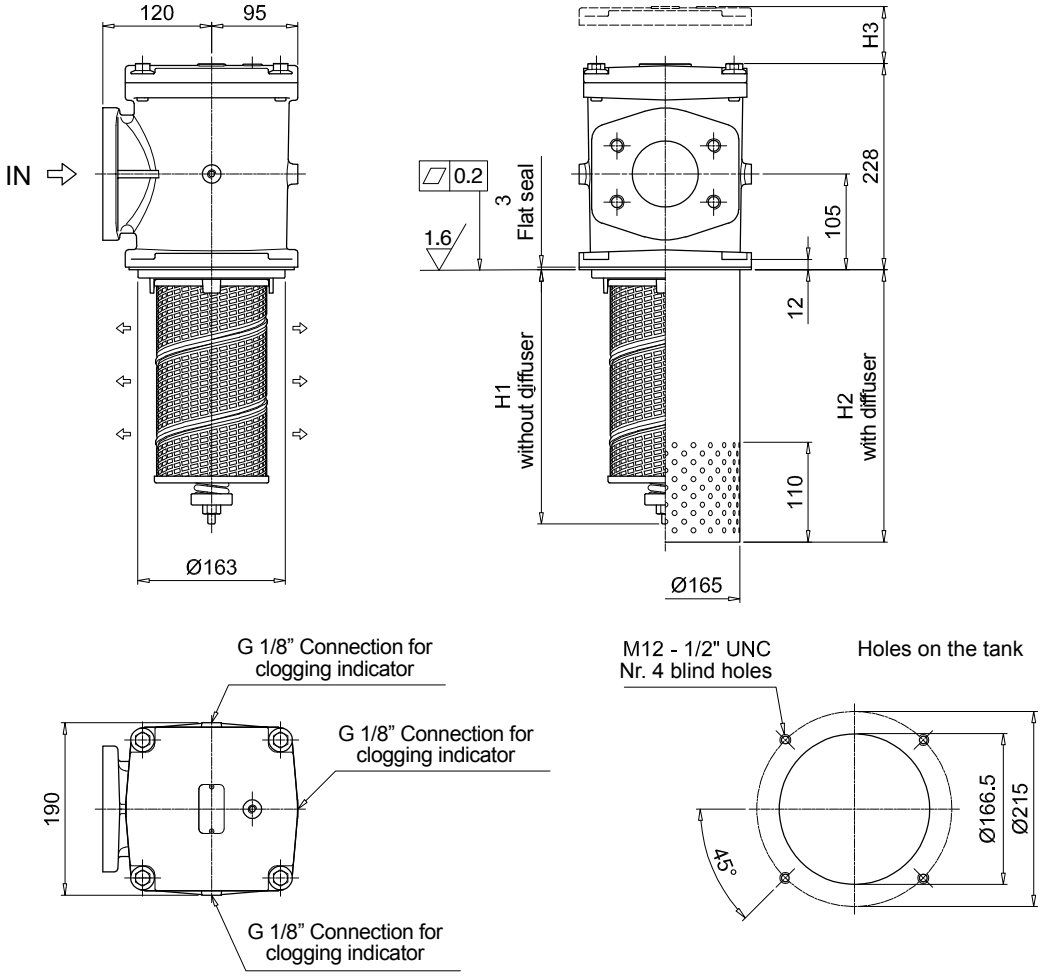

MPH MPH850

Designation & Ordering code

COMPLETE FILTER

Configuration example: MPH850 | 1 | C | D | S | A | F1 | A10 | P01

Series and size

MPH850

Length

1 | **2** | **3** | **4** |

Bypass valve

S	Without bypass	**C**	1.75 bar

Diffuser and magnetic filter

D	With diffuser, with magnetic filter
F	With diffuser, without magnetic filter
O	Without diffuser, with magnetic filter
E	Without diffuser, without magnetic filter

Air breather

S	Without air breather

Seals and treatments		Filtration rating Axx	Mxx	Pxx
A	NBR	•	•	•
V	FPM	•	•	•
W	NBR head anodized	•	•	-
Z	FPM head anodized	•	•	-

Main Connections		Rear connections
F1	UNI 2223 DN 100 PN 10/16	3” SAE 3000 psi/M
F2	UNI 2223 DN 100 PN 10/16	3” SAE 3000 psi/UNC
F5	Not machined	3” SAE 3000 psi/M
F6	Not machined	3” SAE 3000 psi/UNC
F7	4” SAE 3000 psi/M	3” SAE 3000 psi/M
F8	4” SAE 3000 psi/UNC	3” SAE 3000 psi/UNC

Filtration rating (filter media)

A03	Inorganic microfiber 3 µm	**M25**	Wire mesh 25 µm
A06	Inorganic microfiber 6 µm	**M60**	Wire mesh 60 µm
A10	Inorganic microfiber 10 µm	**M90**	Wire mesh 90 µm
A16	Inorganic microfiber 16 µm	**P10**	Resin impregnated paper 10 µm
A25	Inorganic microfiber 25 µm	**P25**	Resin impregnated paper 25 µm

Execution

P01	MP Filtri standard
Pxx	Customized

FILTER ELEMENT

Configuration example: MR850 | 1 | A10 | A | P01

Element series and size

MR850

Element length

1 | **2** | **3** | **4** |

Filtration rating (filter media)

A03	Inorganic microfiber 3 µm	**M25**	Wire mesh 25 µm
A06	Inorganic microfiber 6 µm	**M60**	Wire mesh 60 µm
A10	Inorganic microfiber 10 µm	**M90**	Wire mesh 90 µm
A16	Inorganic microfiber 16 µm	**P10**	Resin impregnated paper 10 µm
A25	Inorganic microfiber 25 µm	**P25**	Resin impregnated paper 25 µm

Seals

A	NBR
V	FPM

Execution

P01	MP Filtri standard
Pxx	Customized

CLOGGING INDICATORS

See page 710-711

BVA	Axial pressure gauge	**BEA**	Electrical pressure indicator
BVR	Radial pressure gauge	**BEM**	Electrical pressure indicator
BVP	Visual pressure indicator with automatic reset	**BLA**	Electrical / visual pressure indicator
BVQ	Visual pressure indicator with manual reset		

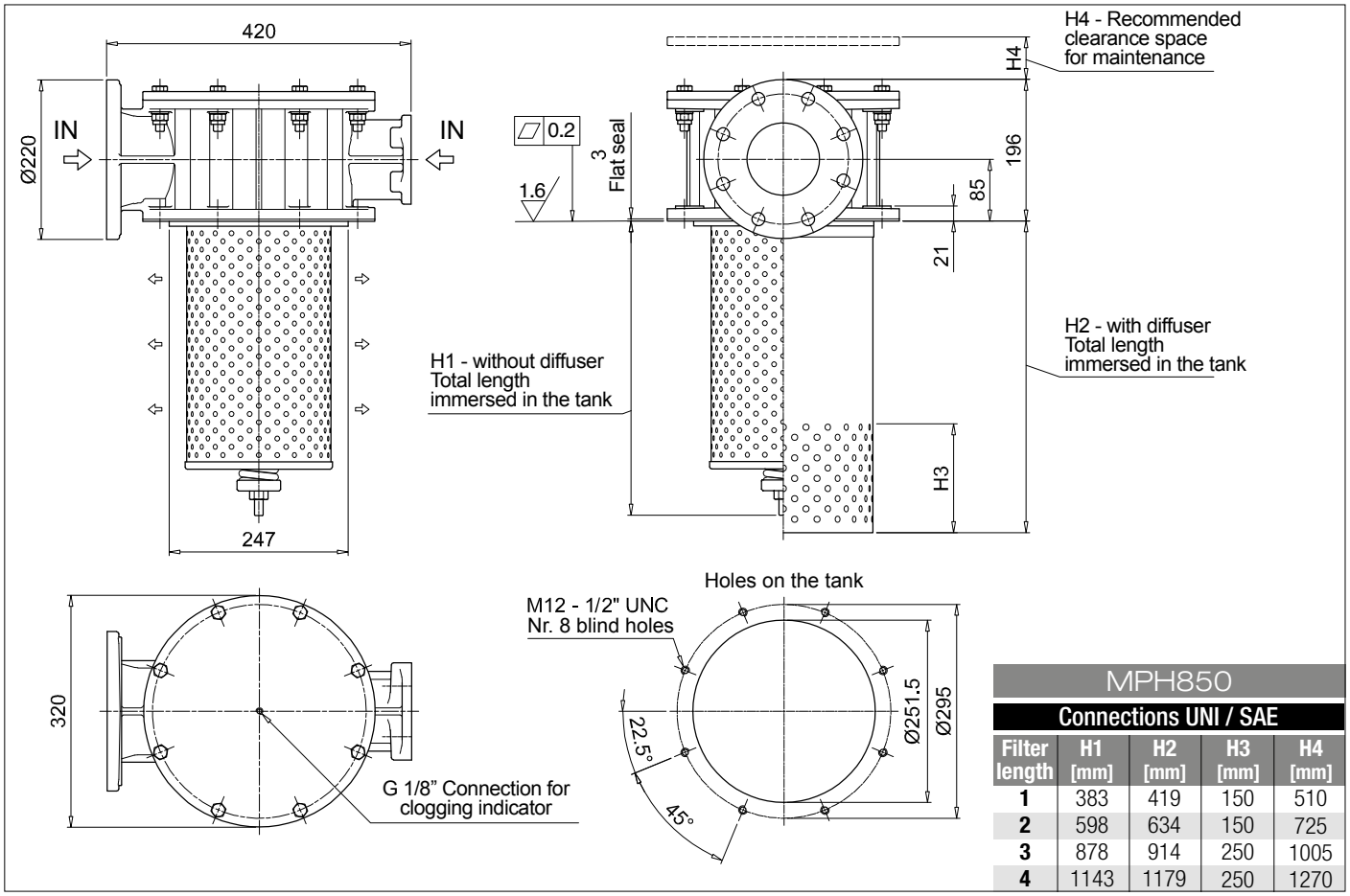

MPH850				
Connections UNI / SAE				
Filter length	**H1 [mm]**	**H2 [mm]**	**H3 [mm]**	**H4 [mm]**
1	383	419	150	510
2	598	634	150	725
3	878	914	250	1005
4	1143	1179	250	1270

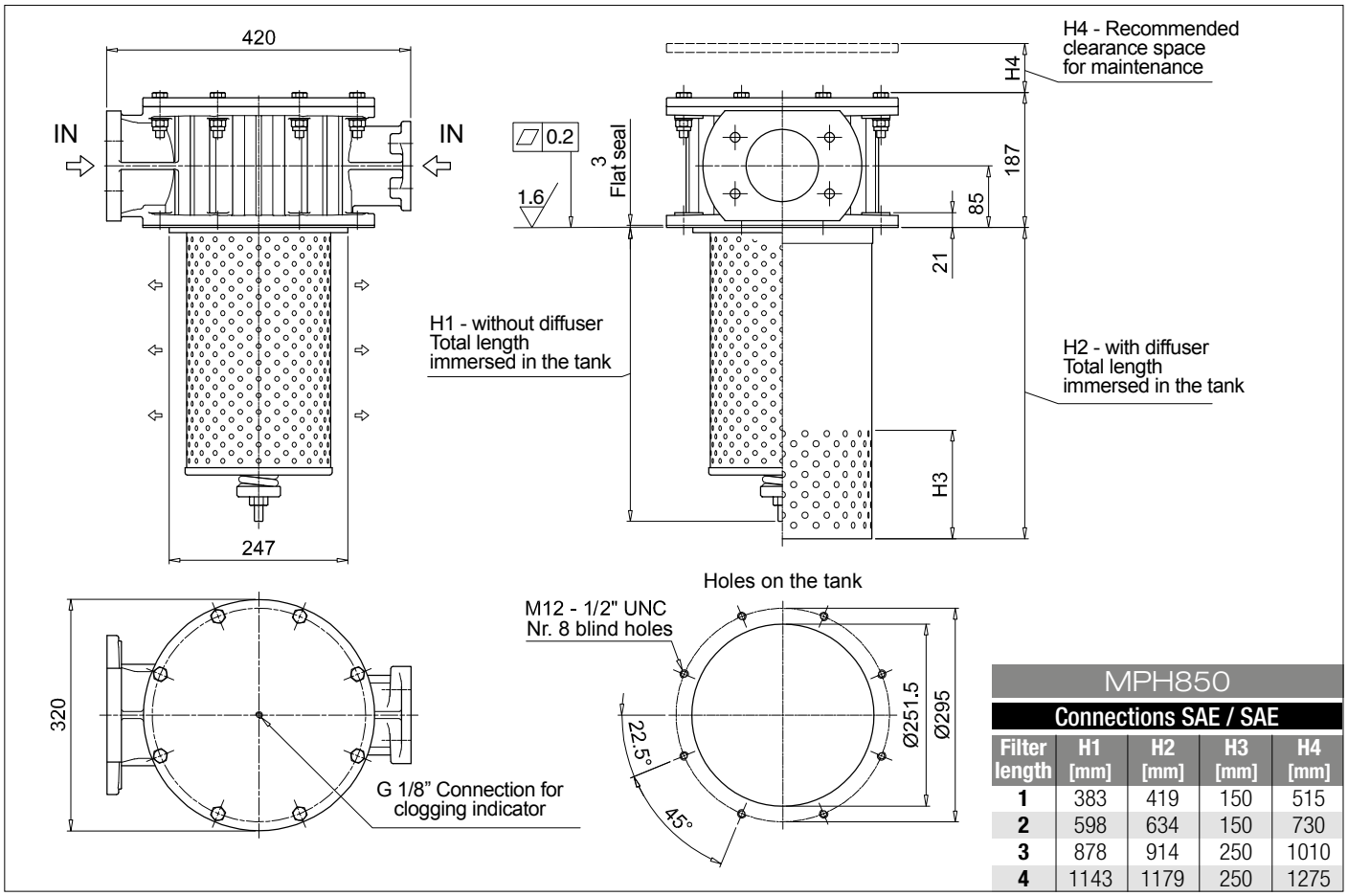

MPH850				
Connections SAE / SAE				
Filter length	**H1 [mm]**	**H2 [mm]**	**H3 [mm]**	**H4 [mm]**
1	383	419	150	515
2	598	634	150	730
3	878	914	250	1010
4	1143	1179	250	1275

Order number for spare parts

MPH 110 - 114

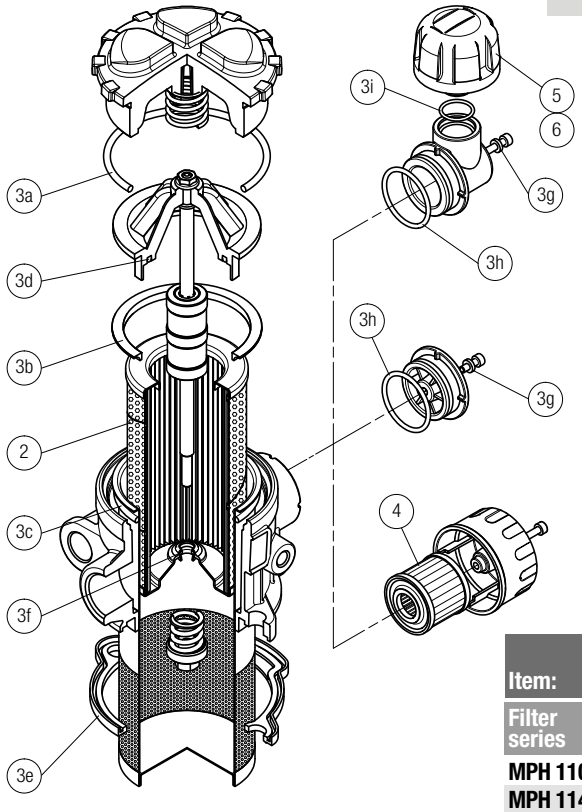

Item:	2	3 (3a ÷ 3i)		4	5	6
	Q.ty: 1 pc.	Q.ty: 1 pc.		Q.ty: 1 pc.	Q.ty: 1 pc.	Q.ty: 1 pc.
Filter series	Filter element	Seal Kit code number NBR	FPM	Air breather filter element - version: C	D	P
MPH 110	See order table	02050565	02050566	10 µm A3L03	10 µm SAP50G3L03A0P01	10 µm SAP50G3L03A1P01
MPH 114		02050582	02050583			

MPH 116

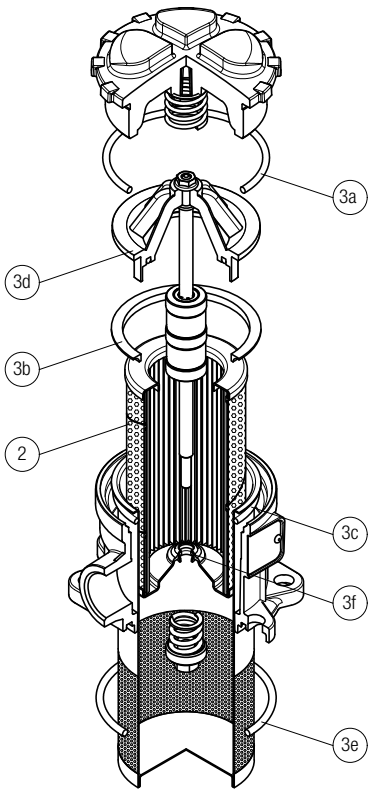

Item:	2	3 (3a ÷ 3f)	
	Q.ty: 1 pc.	Q.ty: 1 pc.	
Filter series	Filter element	Seal Kit code number NBR	FPM
MPH 116	See order table	02050741	02050742

MPH 120

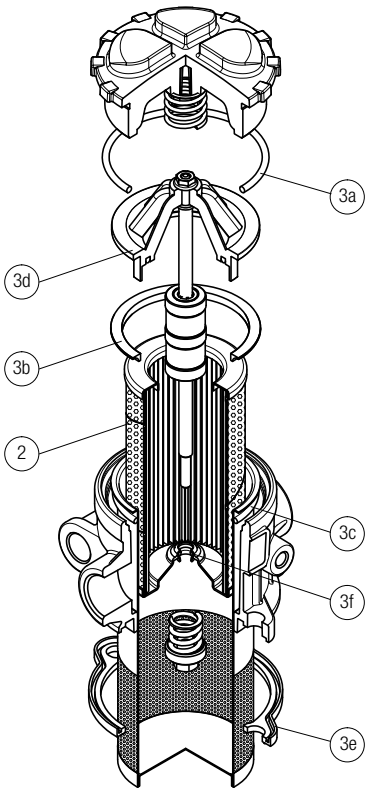

Item:	2	3 (3a ÷ 3f)	
	Q.ty: 1 pc.	Q.ty: 1 pc.	
Filter series	Filter element	Seal Kit code number NBR	FPM
MPH 120	See order table	02050567	02050568

Order number for spare parts

MPH 250 - 630

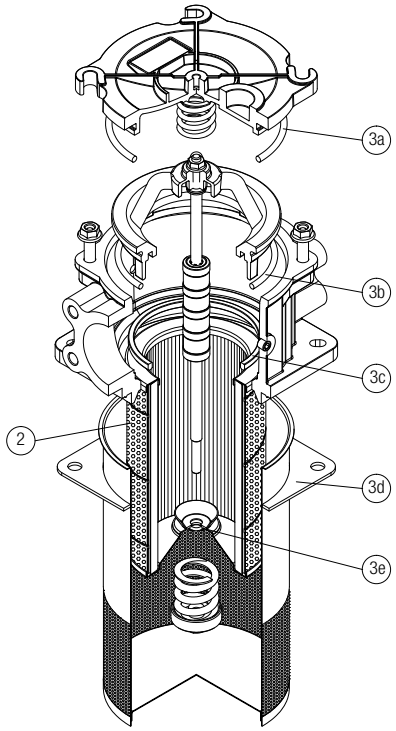

Item:	Q.ty: 1 pc. 2	Q.ty: 1 pc. 3 (3a ÷ 3e)	
Filter series	Filter element	Seal Kit code number NBR	FPM
MPH 250	See order table	02050151	02050152
MPH 630		02050153	02050154

MPH 660

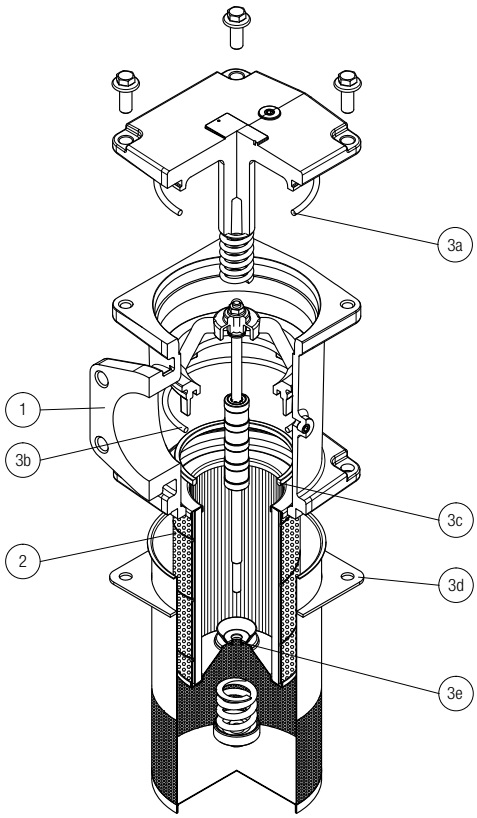

MPH 850

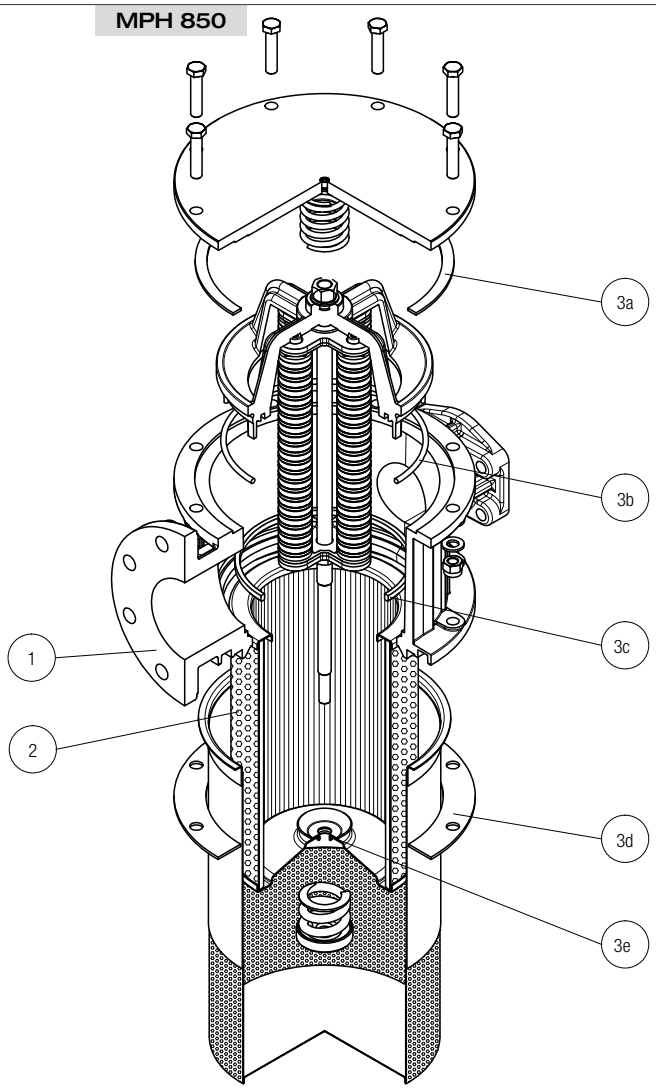

Item:	Q.ty: 1 pc. 2	Q.ty: 1 pc. 3 (3a ÷ 3e)	
Filter series	Filter element	Seal Kit code number NBR	FPM
MPH 660	See order table	02050153	02050154
MPH 850		02050155	02050156

MPI series

Maximum working pressure up to 1 MPa (10 bar) - Flow rate up to 3500 l/min

MPI GENERAL INFORMATION

Description

Return filter

Maximum working pressure up to 1 MPa (10 bar)
Flow rate up to 3500 l/min

MPI is a range of return filter kits for protection of the reservoir against the system contamination.
They are directly integrated in the reservoir in immersed or semi-immersed position to save space into the tank.
The use of the diffuser is recommended, to place the filter output always immersed into the fluid to avoid aeration or foam generation into the reservoir.
The filtration from inside to outside allows a cleaner filter element replacement, the dirty remains into the filter element.

Available features:
- Fine filtration rating, to get a good cleanliness level into the reservoir
- Bypass valve, to relieve excessive pressure drop across the filter media
- Magnetic filter, to hold the ferrous particles
- Oil dipstick, to easily check the level of the fluid into the reservoir (separate item)
- Diffuser, to reduce the risk of aeration, foaming and noise

Common applications:
Heavy duty industrial equipment

Technical data

Filter housing materials
- Insert assembly
  Polyamide, GF reinforced: MPI 100
  Aluminium: MPI 250-630-850

- Diffuser: Tinned Steel

- Valve: Steel

Bypass valve
- Opening pressure 175 kPa (1.75 bar) ±10%
- Opening pressure 250 kPa (2.5 bar) ±10%, except for MPI 850

Δp element type
- Microfibre filter elements - series MR: 10 bar
- Fluid flow through the filter element from IN to OUT

Seals
- Standard NBR series A
- Optional FPM series V

Temperature
From -25 °C to +110 °C

Note
MPI filters are provided for vertical mounting

Weights [kg] and volumes [dm³]

Filter series	Weights [kg]						Volumes [dm³]					
	Length	1	2	3	4	5	Length	1	2	3	4	5
MPI 100		0.90	1.00	1.20	1.50	1.80		0.90	0.90	1.20	1.60	1.80
MPI 250		2.20	2.50	2.90	4.30	-		3.50	3.50	4.50	7.00	-
MPI 630		3.40	3.90	4.30	5.40	6.60		5.80	7.40	9.50	11.40	13.50
MPI 850		15.20	18.20	21.20	25.20	-		8.80	12.20	16.70	20.80	-

FILTER ASSEMBLY SIZING
Flow rates [l/min]

Filters series	Length	A03	A06	A10	A16	A25	M25 M60 M90	P10	P25
MPI 100	1	26	29	72	79	107	282	164	190
	2	43	46	112	114	161	318	164	190
	3	64	72	132	156	178	324	219	251
	4	90	99	184	198	216	324	266	302
	5	117	128	201	219	244	324	282	318
MPI 250	1	93	102	210	251	315	1093	339	383
	2	124	151	327	412	421	1122	460	514
	3	189	221	418	445	500	1137	544	616
	4	261	304	592	670	766	1166	832	923
MPI 630	1	160	200	369	423	518	1894	565	632
	2	240	257	571	611	1045	1929	1137	1285
	3	330	374	745	788	1308	1938	1416	1577
	4	374	403	887	1010	1348	1956	1448	1612
	5	625	698	1210	1257	1723	2121	1839	1929
MPI 850	1	775	1041	1246	1568	2242	3311	2371	2625
	2	1176	1522	1682	1747	2449	3378	2684	2886
	3	1490	1914	1995	2014	3035	3405	3144	3220
	4	1668	2088	2305	2363	3169	3517	3272	3378

Maximum flow rate for a complete return filter with a pressure drop Δp = 0.5 bar.
The reference fluid has a kinematic viscosity of 30 mm^2/s (cSt) and a density of 0.86 kg/dm^3.
For different pressure drop or fluid viscosity we recommend to use our selection software available on www.mpfiltri.com.
You can also calculate the right size using the formulas present on the FILTER SIZING paragraph at the beginning of the full catalogue or at the beginning of the filter family brochure.
Please, contact our Sales Department for further additional information.

Hydraulic symbol

Filter series	Style 1 connection
MPI 100	•
MPI 250	•
MPI 630	•
MPI 850	•

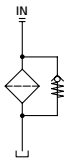

MPI MPI100 - MPI250 - MPI630 - MPI850

Designation & Ordering code

COMPLETE FILTER

Configuration example 1:	MPI100	1	C	D	A	A10	P01
Configuration example 2:	MPI630	5	E	D	Z	M25	P01

Series and size

- **MPI100**
- **MPI250**
- **MPI630**
- **MPI850**

Length	MPI100	MPI250	MPI630	MPI850
1	•	•	•	•
2	•	•	•	•
3	•	•	•	•
4	•	•	•	•
5	•	-	•	-

Bypass valve	MPI100	MPI250	MPI630	MPI850
S Without bypass	•	•	•	•
C 1.75 bar	•	•	•	•
E 2.5 bar	•	•	•	-

Diffuser and magnetic filter

- **D** With diffuser, with magnetic filter
- **F** With diffuser, without magnetic filter
- **O** Without diffuser, with magnetic filter
- **E** Without diffuser, without magnetic filter

Seals and treatments	Filtration rating Axx	Mxx	Pxx
A NBR	•	•	•
V FPM	•	•	•
W NBR head anodized	•	•	-
Z FPM head anodized	•	•	-

Filtration rating (filter media)

- **A03** Inorganic microfiber 3 µm
- **A06** Inorganic microfiber 6 µm
- **A10** Inorganic microfiber 10 µm
- **A16** Inorganic microfiber 16 µm
- **A25** Inorganic microfiber 25 µm
- **M25** Wire mesh 25 µm
- **M60** Wire mesh 60 µm
- **M90** Wire mesh 90 µm
- **P10** Resin impregnated paper 10 µm
- **P25** Resin impregnated paper 25 µm

Execution

- **P01** MP Filtri standard
- **Pxx** Customized

FILTER ELEMENT

Configuration example 1:	MR100	1	A10	A	P01
Configuration example 2:	MR630	5	M25	V	P01

Element series and size

- **MR100**
- **MR250**
- **MR630**
- **MR850**

Element length	Size 100	Size 250	Size 630	Size 850
1	•	•	•	•
2	•	•	•	•
3	•	•	•	•
4	•	•	•	•
5	•	-	•	-

Filtration rating (filter media)

- **A03** Inorganic microfiber 3 µm
- **A06** Inorganic microfiber 6 µm
- **A10** Inorganic microfiber 10 µm
- **A16** Inorganic microfiber 16 µm
- **A25** Inorganic microfiber 25 µm
- **M25** Wire mesh 25 µm
- **M60** Wire mesh 60 µm
- **M90** Wire mesh 90 µm
- **P10** Resin impregnated paper 10 µm
- **P25** Resin impregnated paper 25 µm

Seals

- **A** NBR
- **V** FPM

Execution

- **P01** MP Filtri standard
- **Pxx** Customized

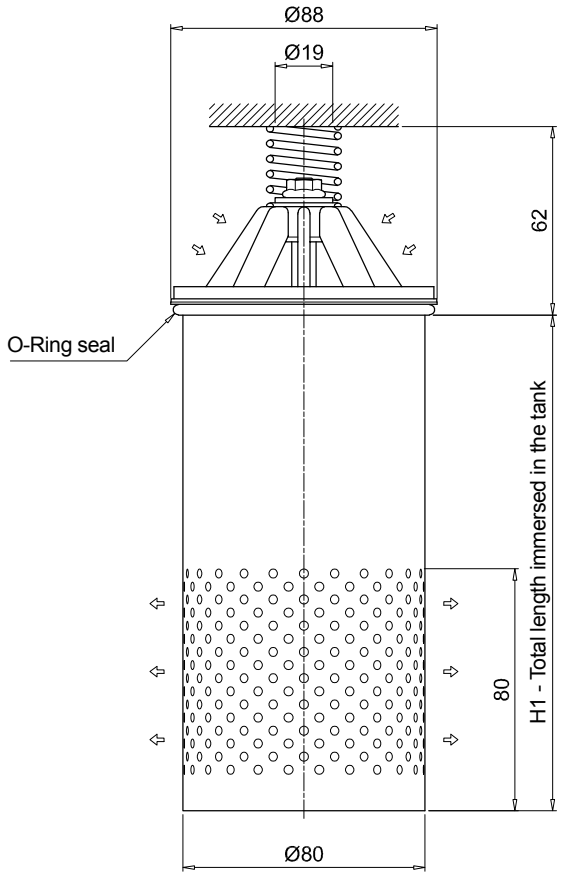

MPI100 with diffuser	
Filter length	H1 [mm]
1	198
2	198
3	248
4	348
5	448

Filter seat

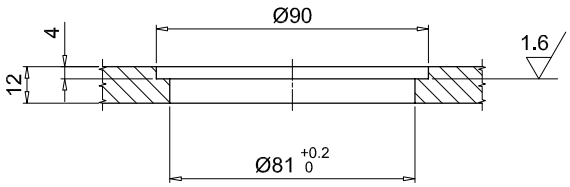

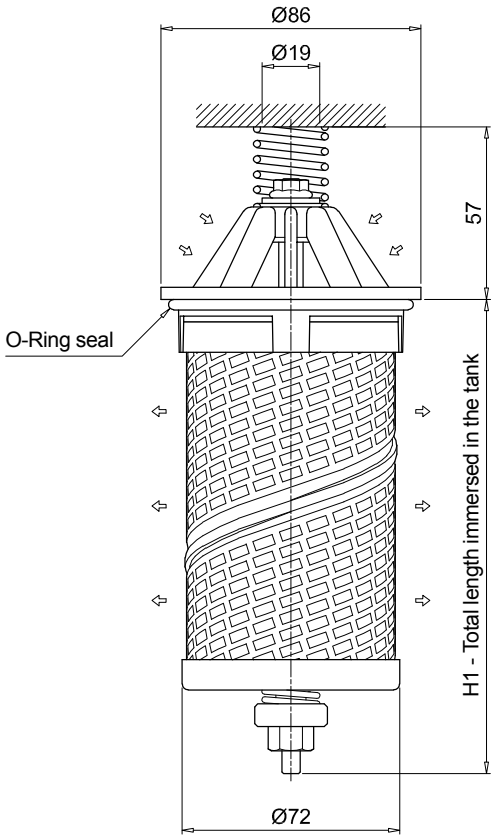

MPI100 without diffuser	
Filter length	H1 [mm]
1	141
2	185
3	235
4	335
5	435

Filter seat

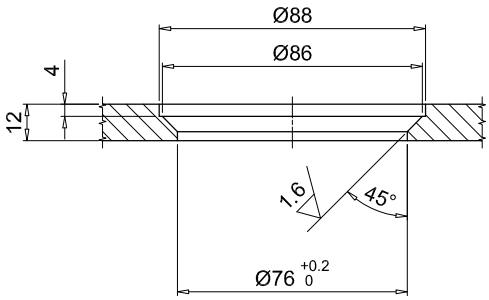

Dimensions

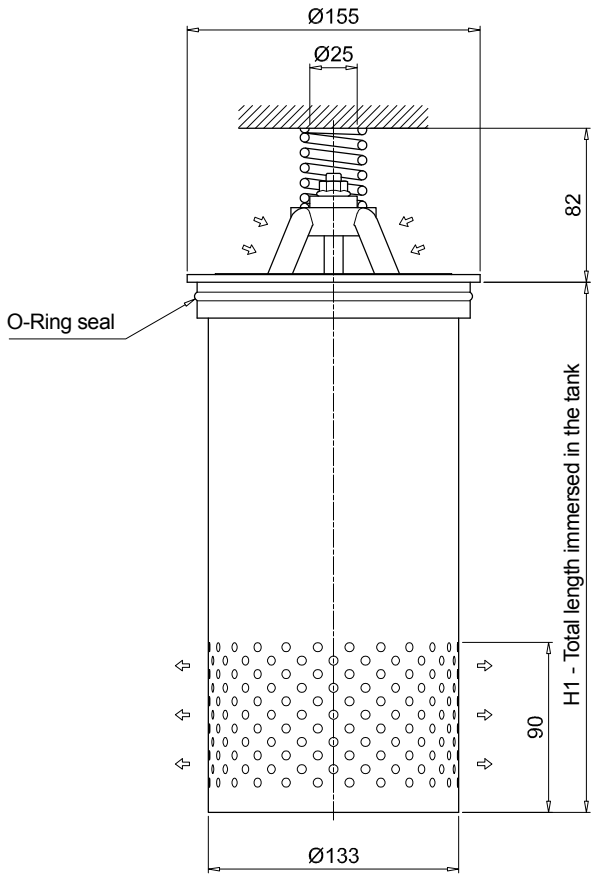

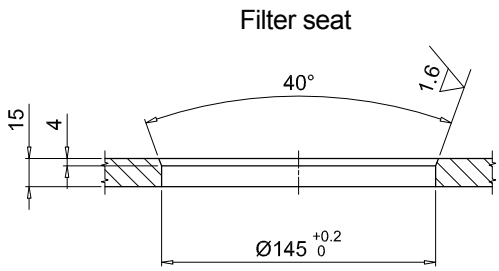

MPI250 with diffuser	
Filter length	H1 [mm]
1	266
2	266
3	336
4	524

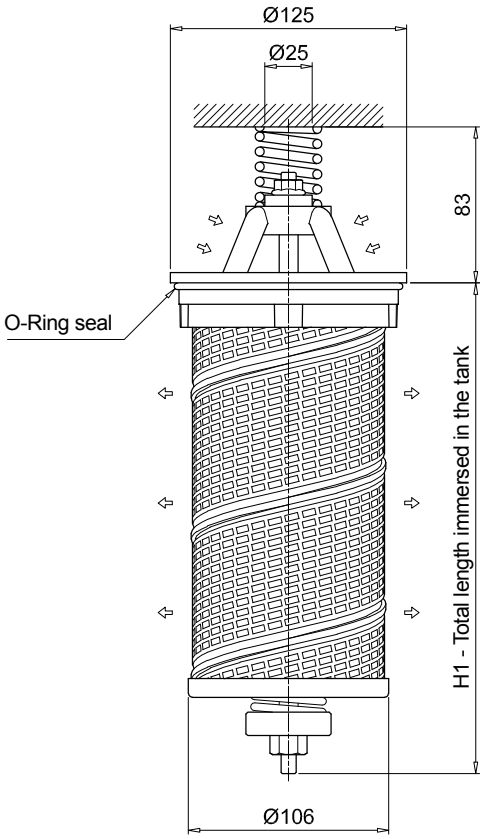

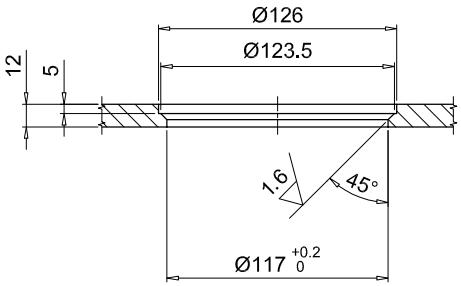

MPI250 without diffuser	
Filter length	H1 [mm]
1	193
2	243
3	313
4	516

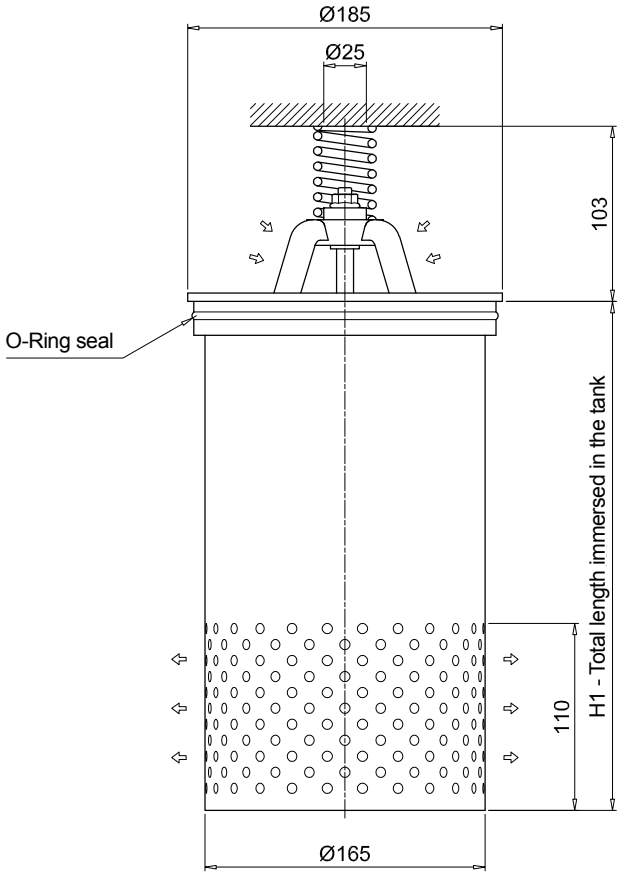

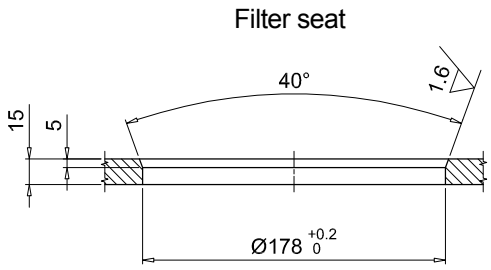

MPI630 with diffuser	
Filter length	H1 [mm]
1	298
2	378
3	478
4	568
5	868

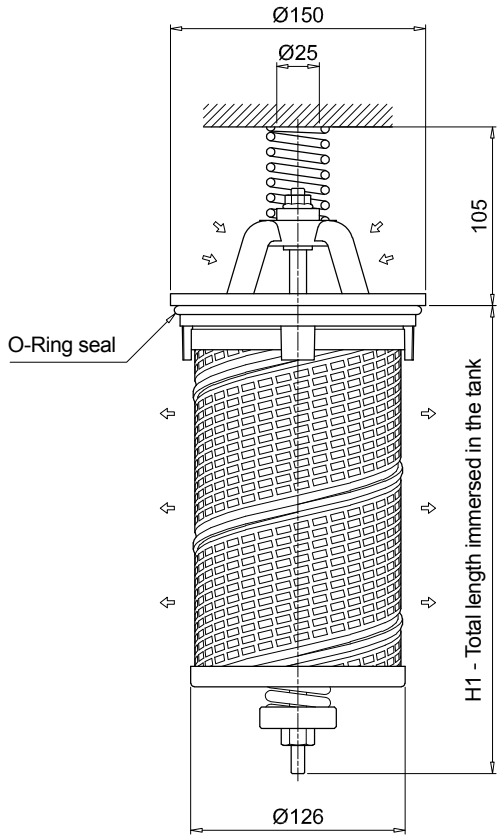

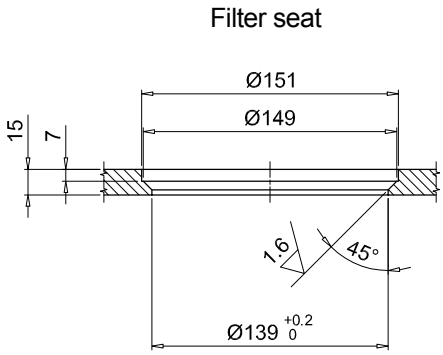

MPI630 without diffuser	
Filter length	H1 [mm]
1	275
2	355
3	455
4	540
5	841

Dimensions

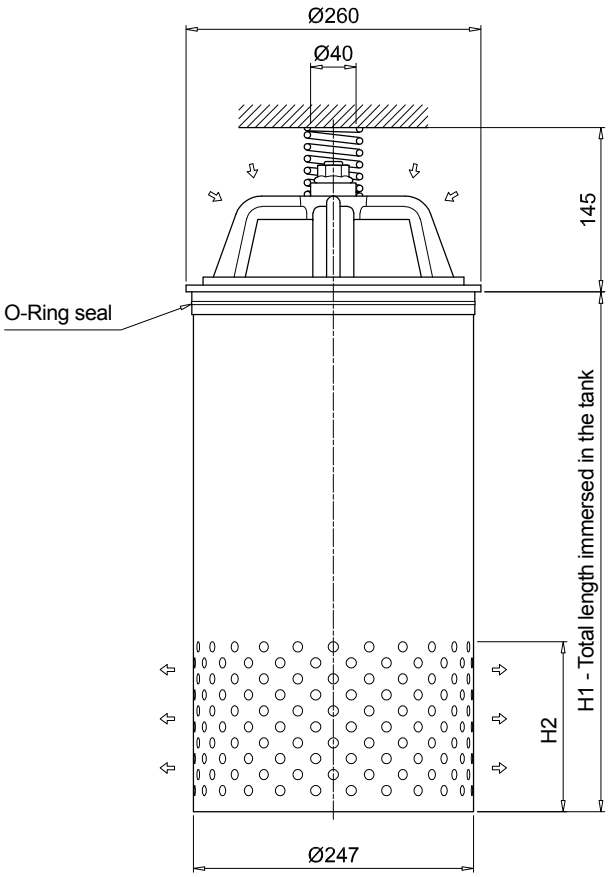

MPI850 with diffuser		
Filter length	H1 [mm]	H2 [mm]
1	427	150
2	642	150
3	922	250
4	1187	250

Filter seat

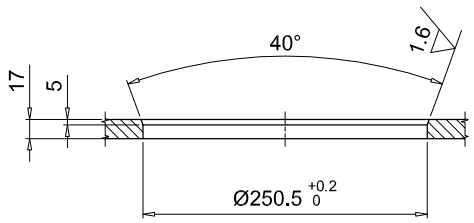

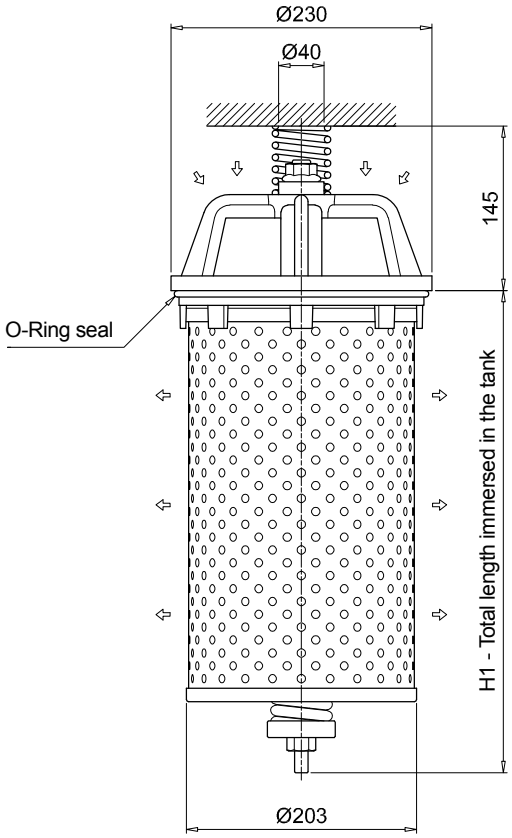

MPI850 without diffuser	
Filter length	H1 [mm]
1	405
2	620
3	900
4	1165

Filter seat

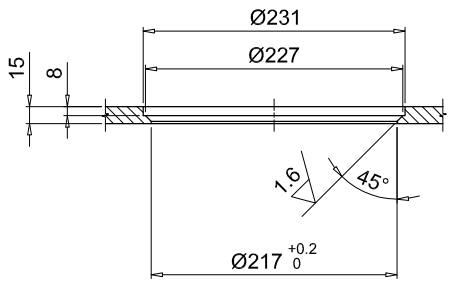

Order number for spare parts

MPI 100

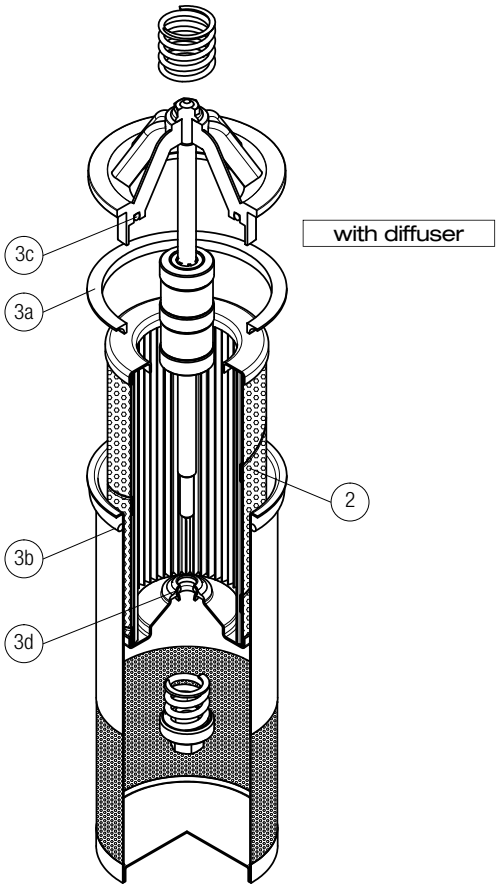

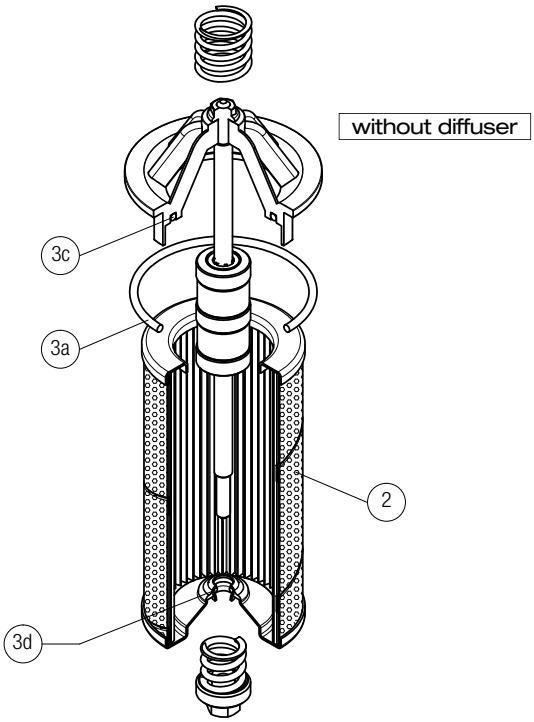

Item:	Q.ty: 1 pc. 2	Q.ty: 1 pc. 3 (3a ÷ 3d)	
Filter series	**Filter element**	**Seal Kit code number NBR**	**FPM**
MPI 100	See order table	02050145	02050146

MPI 250 - 630

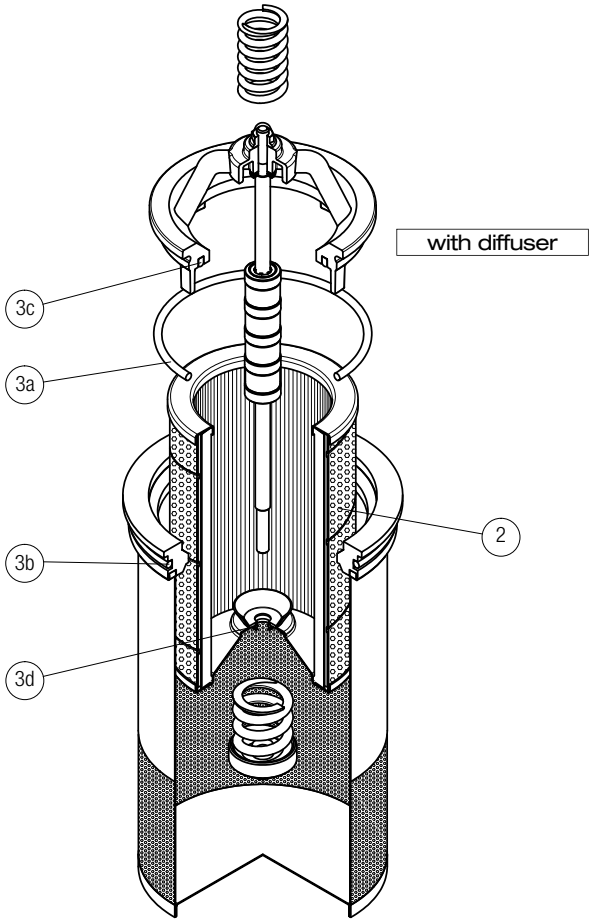

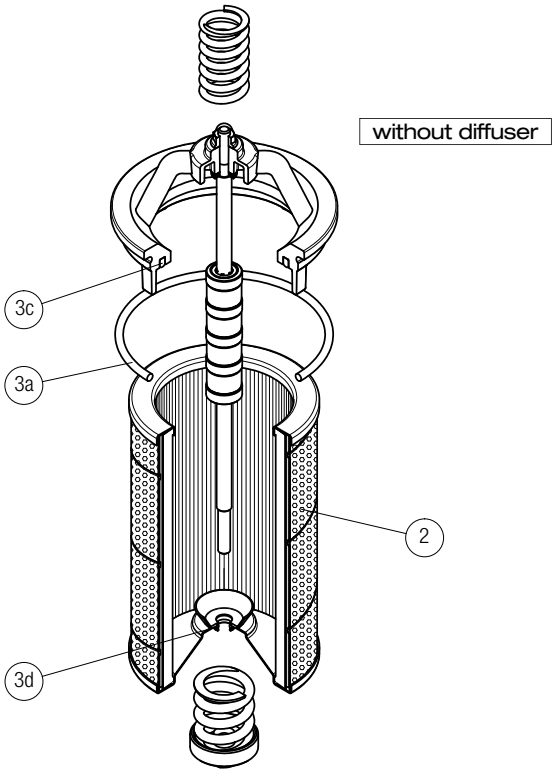

Item:	Q.ty: 1 pc. 2	Q.ty: 1 pc. 3 (3a ÷ 3d)	
Filter series	**Filter element**	**Seal Kit code number NBR**	**FPM**
MPI 250	See order table	02050147	02050148
MPI 630		02050112	02050113

Order number for spare parts

MPI 850

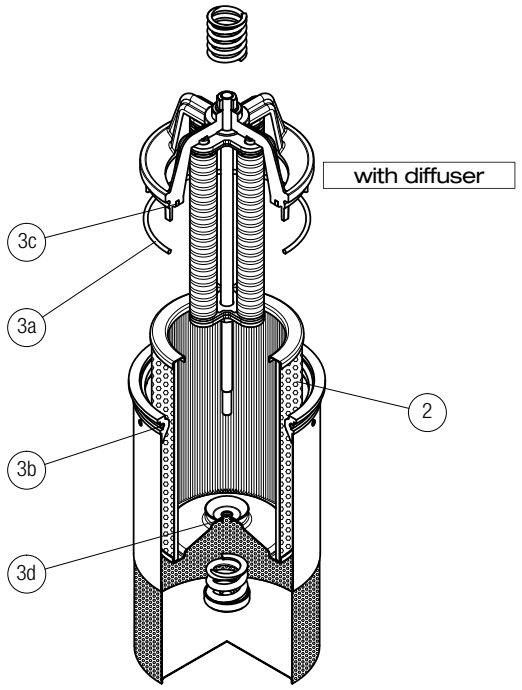

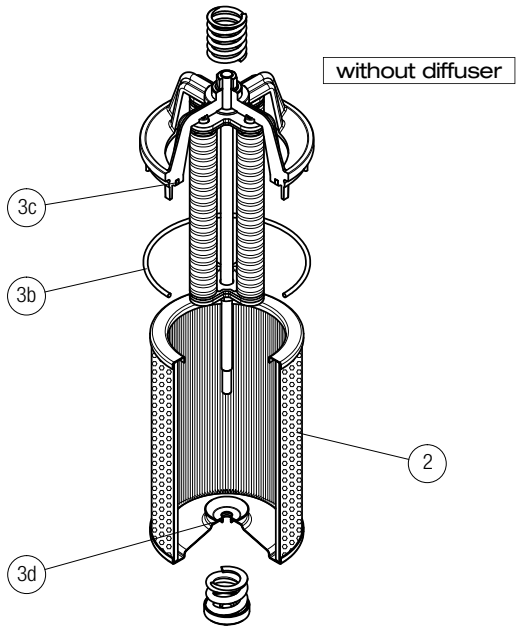

Item:	Q.ty: 1 pc. 2	Q.ty: 1 pc. 3 (3a ÷ 3d)	
Filter series	Filter element	Seal Kit code number NBR	FPM
MPI 850	See order table	02050114	02050115

FRI series

Maximum working pressure up to 2 MPa (20 bar) - Flow rate up to 2500 l/min

FRI GENERAL INFORMATION

Description

Return filter

Maximum working pressure up to 2 MPa (20 bar)
Flow rate up to 2500 l/min

FRI is a range of return filters for protection of the reservoir against the system contamination.
They could be directly fixed to the reservoir in immersed or semi-immersed position or connected to the lines of the system through the hydraulic fittings.
The filter output must be always immersed into the fluid to avoid aeration or foam generation into the reservoir.

Available features:
- Female threaded connections up to 2 1/2" and flanged connections up to 3 1/2", for a maximum flow rate of 2500 l/min
- Double input connections, to connect several return lines or drains
- Fine filtration rating, to get a good cleanliness level into the reservoir
- Bypass valve, to relieve excessive pressure drop across the filter media
- Visual, electrical and electronic differential clogging indicators

Common applications:
Heavy duty industrial equipment

Technical data

Filter housing materials
- Filter body
  Aluminium: FRI 255
  Anodized Aluminium: FRI 025-040-100-250-630
  Phosphatized Steel: FRI 850

- Cover
  Polyamide, GF reinforced: FRI 255
  Anodized Aluminium: FRI 025-040-100-250-630-850

- Valve: Polyamide, GF reinforced - Steel

Bypass valve
Opening pressure 240 kPa (2.4 bar) ±10%

Δp element type
- Microfibre filter elements - series N: 10 bar
- Fluid flow through the filter element from OUT to IN

Seals
- Standard NBR series A
- Optional FPM series V

Temperature
From -25 °C to +110 °C

Note
FRI filters are provided
for vertical mounting

Weights [kg] and volumes [dm³]

Filter series	Weights [kg]	Volumes [dm³]
	Length 1	Length 1
FRI 025	1.0	0.28
FRI 040	2.0	0.70
FRI 100	3.8	1.09
FRI 250	6.3	2.60
FRI 255	4.2	3.20
FRI 630	13.8	7.05
FRI 850	48.0	21.50

FILTER ASSEMBLY SIZING
Flow rates [l/min]

		Filter element design - N Series							
Filter series	Length	A03	A06	A10	A16	A25	M25 M60 M90	P10	P25
FRI 025	**1**	6	10	17	19	43	122	43	47
FRI 040	**1**	19	23	43	45	94	155	94	102
FRI 100	**1**	32	34	89	92	187	260	187	206
FRI 250	**1**	144	179	271	300	448	645	448	490
FRI 255	**1**	144	179	271	300	448	645	448	490
FRI 630	**1**	242	279	508	577	834	1446	834	911
FRI 850	**1**	440	541	971	1143	1705	2528	1705	1880

Maximum flow rate for a complete return filter with a pressure drop Δp = 0.5 bar.
The reference fluid has a kinematic viscosity of 30 mm^2/s (cSt) and a density of 0.86 kg/dm^3.
For different pressure drop or fluid viscosity we recommend to use our selection software available on www.mpfiltri.com.
You can also calculate the right size using the formulas present on the FILTER SIZING paragraph at the beginning of the full catalogue or at the beginning of the filter family brochure.
Please, contact our Sales Department for further additional information.

Hydraulic symbols

Filter series	Style 1 connection + Diff. indic.	Style 2 connections + Diff. indic.
FRI 025		•
FRI 040		•
FRI 100		•
FRI 250		•
FRI 255	•	
FRI 630		•
FRI 850	•	

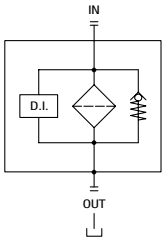

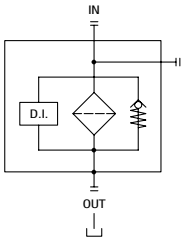

Pressure drop

Filter housings Δp pressure drop

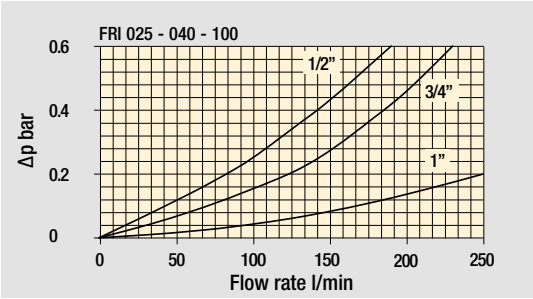

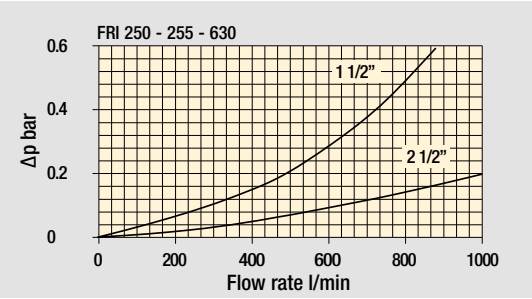

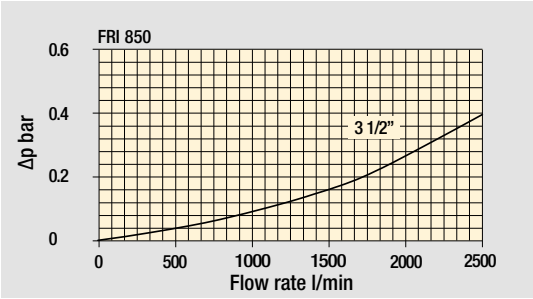

Bypass valve pressure drop

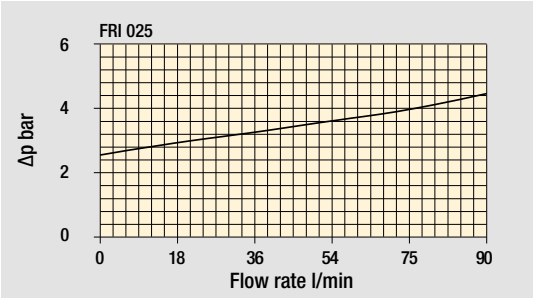

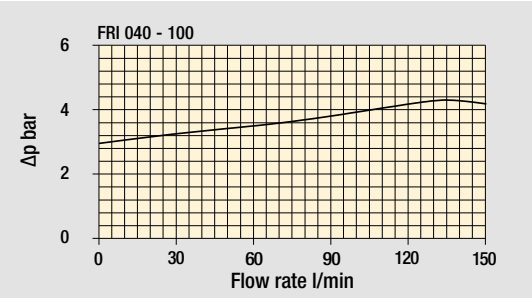

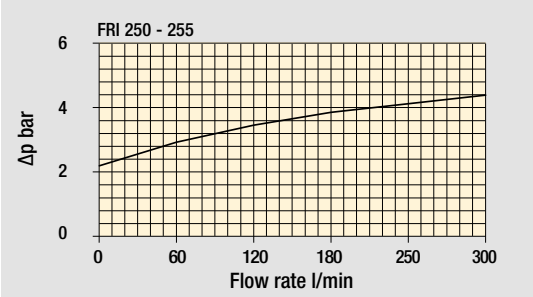

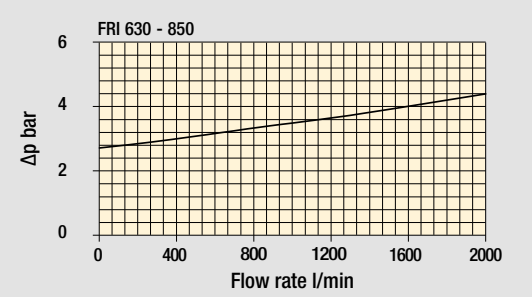

The curves are plotted using mineral oil with density of 0.86 kg/dm^3 in compliance with ISO 3968. Δp varies proportionally with density.

Designation & Ordering code

COMPLETE FILTER

Configuration example 1:	FRI025	B	A	G1	A25	N	P01
Configuration example 2:	FRI040	S	V	G2	M25	N	P01

Series and size

FRI025
FRI040

Bypass valve

B With bypass 2.4 bar
S Without bypass

Seals and treatments

A NBR
V FPM

Connections for FRI025	Connections for FRI040
G1 G 1/2"	G 3/4"
G2 1/2" NPT	3/4" NPT
G3 SAE 8 - 3/4" - 16 UNF	SAE 12 - 1 1/16" - 12 UN

Filtration rating (filter media)

A03 Inorganic microfiber 3 µm	**M25** Wire mesh 25 µm
A06 Inorganic microfiber 6 µm	**M60** Wire mesh 60 µm
A10 Inorganic microfiber 10 µm	**M90** Wire mesh 90 µm
A16 Inorganic microfiber 16 µm	**P10** Resin impregnated paper 10 µm
A25 Inorganic microfiber 25 µm	**P25** Resin impregnated paper 25 µm

Element Δp

N 10 bar

Execution

P01 MP Filtri standard
Pxx Customized

FILTER ELEMENT

Configuration example 1:	CU025	A25	N	P01
Configuration example 2:	CU040	M25	V	P01

Element series and size

CU025
CU040

Filtration rating (filter media)

A03 Inorganic microfiber 3 µm	**M25** Wire mesh 25 µm
A06 Inorganic microfiber 6 µm	**M60** Wire mesh 60 µm
A10 Inorganic microfiber 10 µm	**M90** Wire mesh 90 µm
A16 Inorganic microfiber 16 µm	**P10** Resin impregnated paper 10 µm
A25 Inorganic microfiber 25 µm	**P25** Resin impregnated paper 25 µm

Seals and treatments

N NBR
V FPM

Execution

P01 MP Filtri standard
Pxx Customized

CLOGGING INDICATORS

See page 710-711

DEA Electrical differential pressure indicator
DEM Electrical differential pressure indicator
DEU Electrical differential pressure indicator
DLA Electrical / visual differential pressure indicator
DLE Electrical / visual differential pressure indicator
DTA Electronic differential pressure indicator
DVA Visual differential pressure indicator
DVM Visual differential pressure indicator

PLUGS

See page 737

T2 Plug (not included)

FRI025

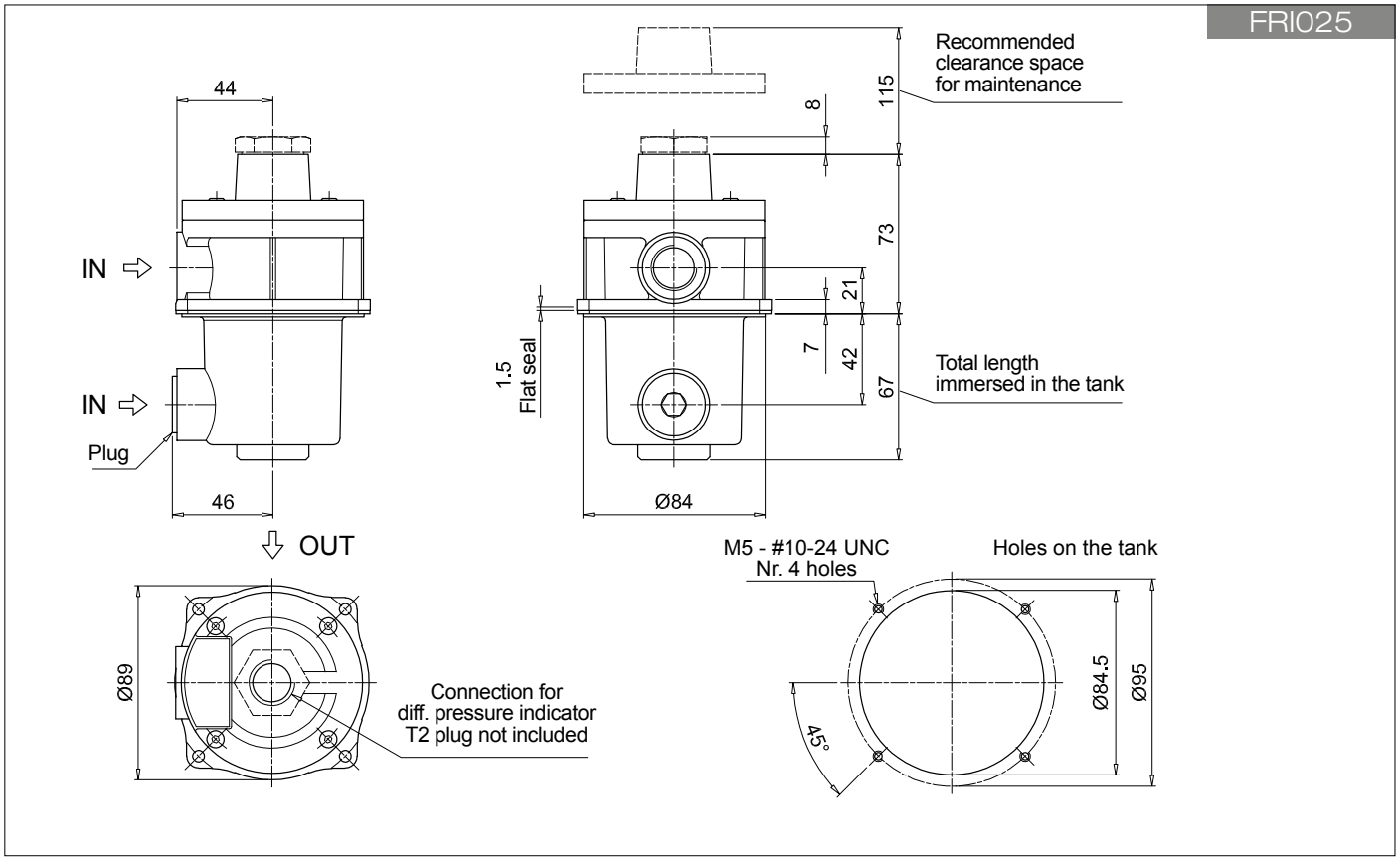

FRI040

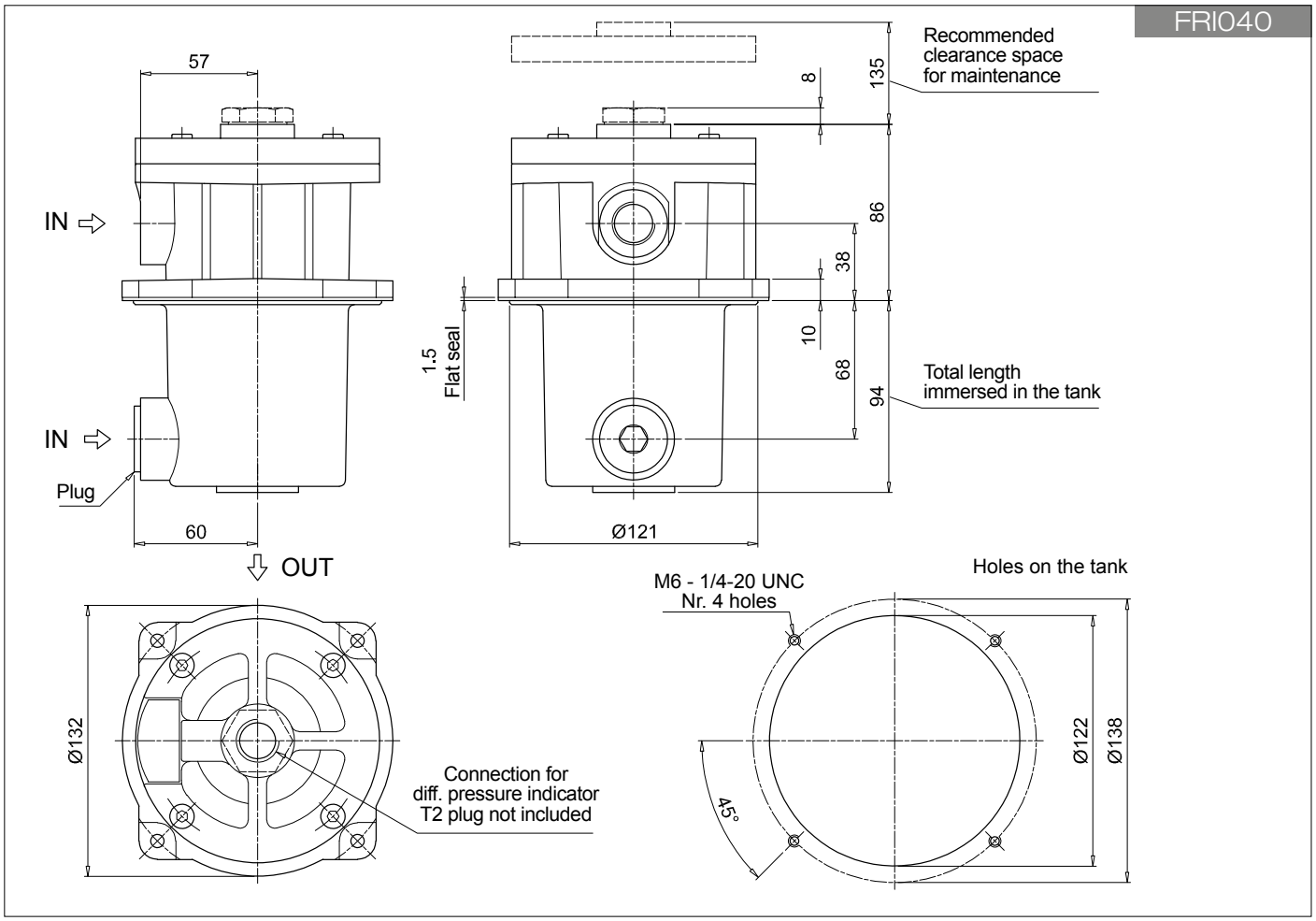

Designation & Ordering code

COMPLETE FILTER

Configuration example 1:	FRI100	B	A	G1	A25	N	P01
Configuration example 2:	FRI630	S	V	F2	M25	N	P01

Series and size

FRI100
FRI250
FRI630

Bypass valve

B With bypass 2.4 bar
S Without bypass

Seals and treatments

A NBR
V FPM

Connections for FRI100	Connections for FRI250	Connections for FRI630
G1 G 1”	G 1 1/2”	G 2 1/2”
G2 1” NPT	1 1/2” NPT	2 1/2” NPT
G3 SAE 16 - 1 5/16” - 12 UN	SAE 24 - 1 7/8” - 12 UN	SAE 32 - 2 1/2” - 12 UN
F1 1” SAE 3000 psi/M	1 1/2” SAE 3000 psi/M	2 1/2” SAE 3000 psi/M
F2 1” SAE 3000 psi/UNC	1 1/2” SAE 3000 psi/UNC	2 1/2” SAE 3000 psi/UNC

Filtration rating (filter media)

A03 Inorganic microfiber 3 µm
A06 Inorganic microfiber 6 µm
A10 Inorganic microfiber 10 µm
A16 Inorganic microfiber 16 µm
A25 Inorganic microfiber 25 µm
M25 Wire mesh 25 µm
M60 Wire mesh 60 µm
M90 Wire mesh 90 µm
P10 Resin impregnated paper 10 µm
P25 Resin impregnated paper 25 µm

Element Δp

N 10 bar

Execution

P01 MP Filtri standard
Pxx Customized

FILTER ELEMENT

Configuration example 1:	CU100	A25	N	P01
Configuration example 2:	CU630	M25	V	P01

Element series and size

CU100
CU250
CU630

Filtration rating (filter media)

A03 Inorganic microfiber 3 µm
A06 Inorganic microfiber 6 µm
A10 Inorganic microfiber 10 µm
A16 Inorganic microfiber 16 µm
A25 Inorganic microfiber 25 µm
M25 Wire mesh 25 µm
M60 Wire mesh 60 µm
M90 Wire mesh 90 µm
P10 Resin impregnated paper 10 µm
P25 Resin impregnated paper 25 µm

Seals and treatments

N NBR
V FPM

Execution

P01 MP Filtri standard
Pxx Customized

CLOGGING INDICATORS

See page 710-711

DEA Electrical differential pressure indicator
DEM Electrical differential pressure indicator
DEU Electrical differential pressure indicator
DLA Electrical / visual differential pressure indicator
DLE Electrical / visual differential pressure indicator
DTA Electronic differential pressure indicator
DVA Visual differential pressure indicator
DVM Visual differential pressure indicator

PLUGS

See page 737

T2 Plug (not included)

FRI100
Threaded connections "G"

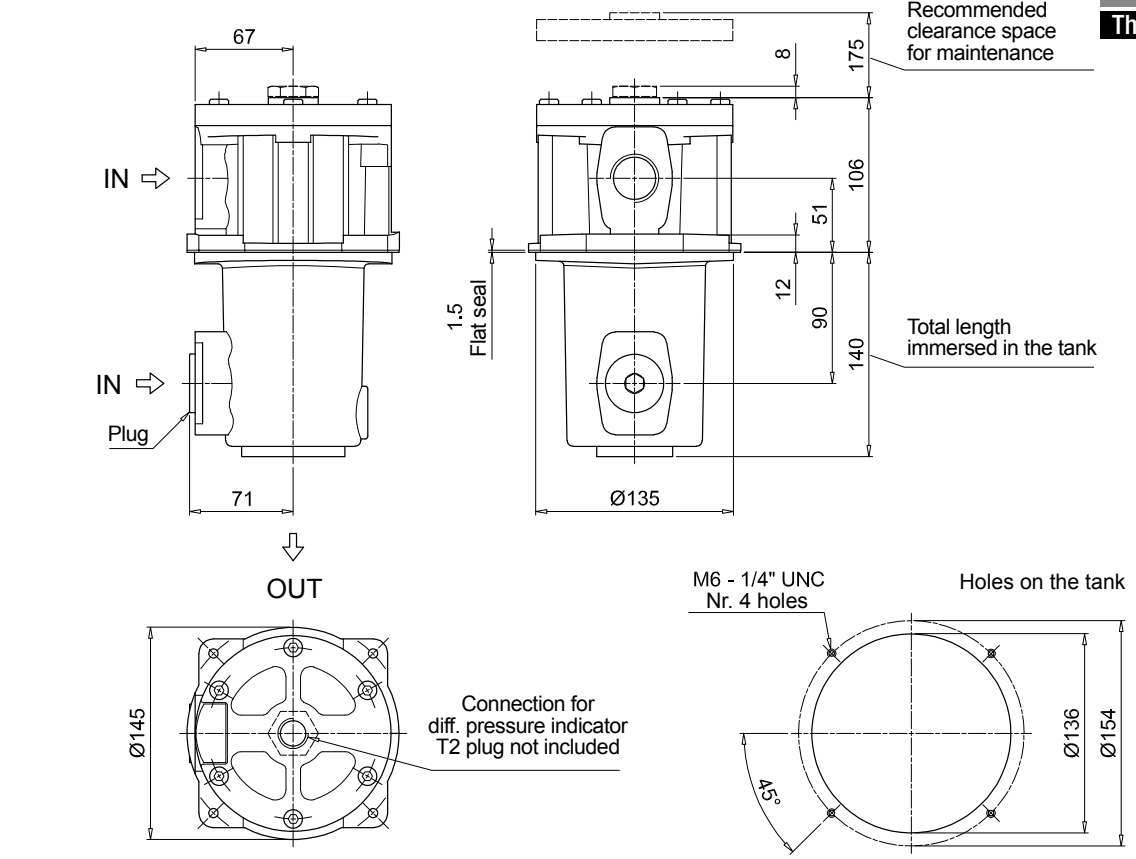

FRI100
Flange connections "F"

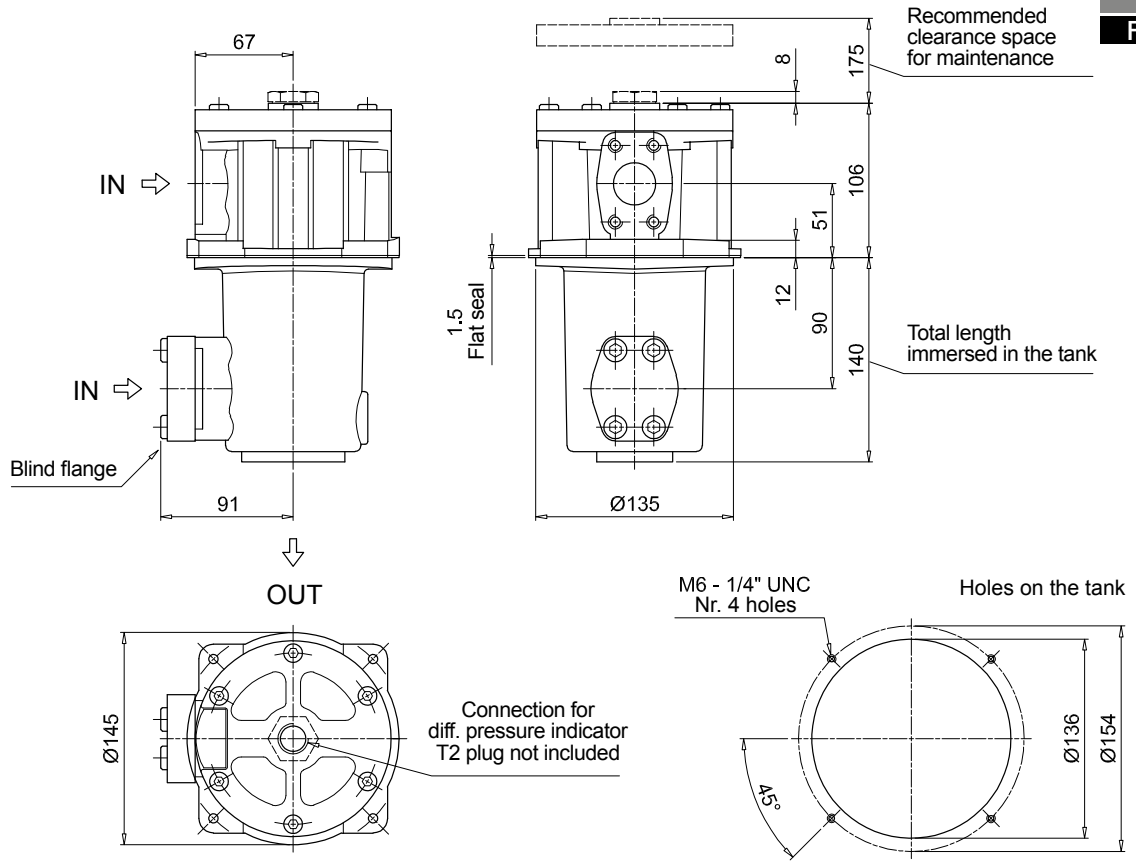

Dimensions

FRI250
Threaded connections "G"

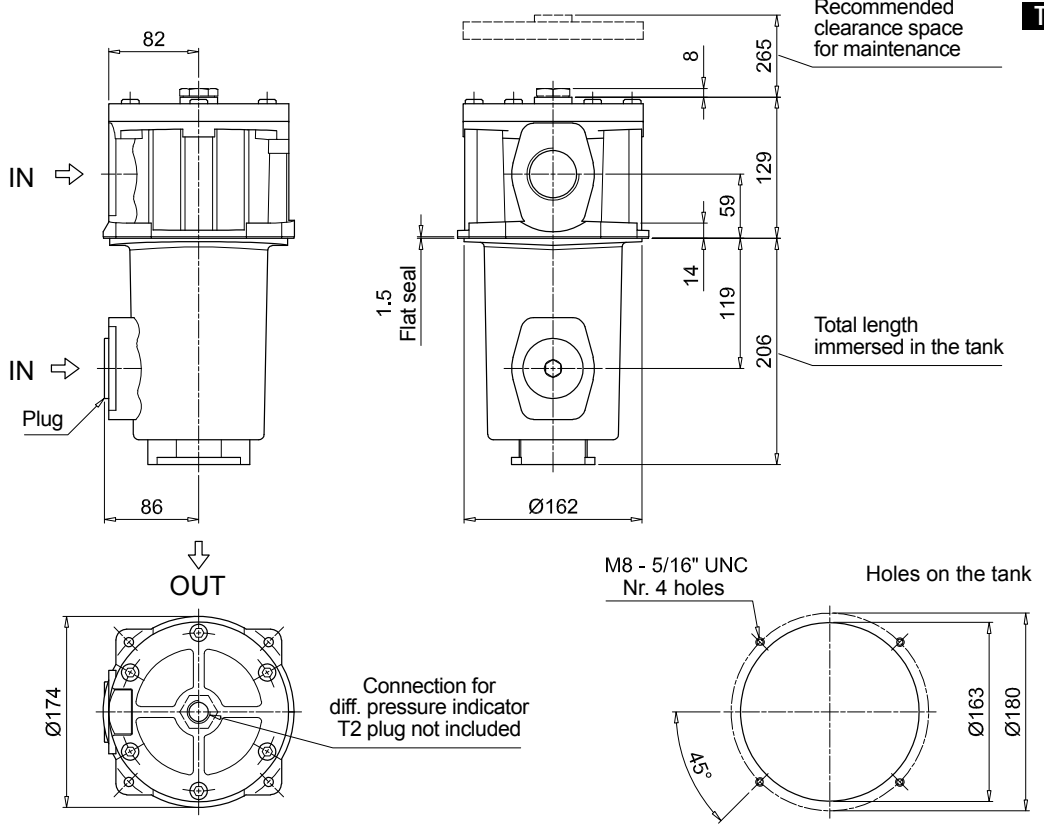

FRI250
Flange connections "F"

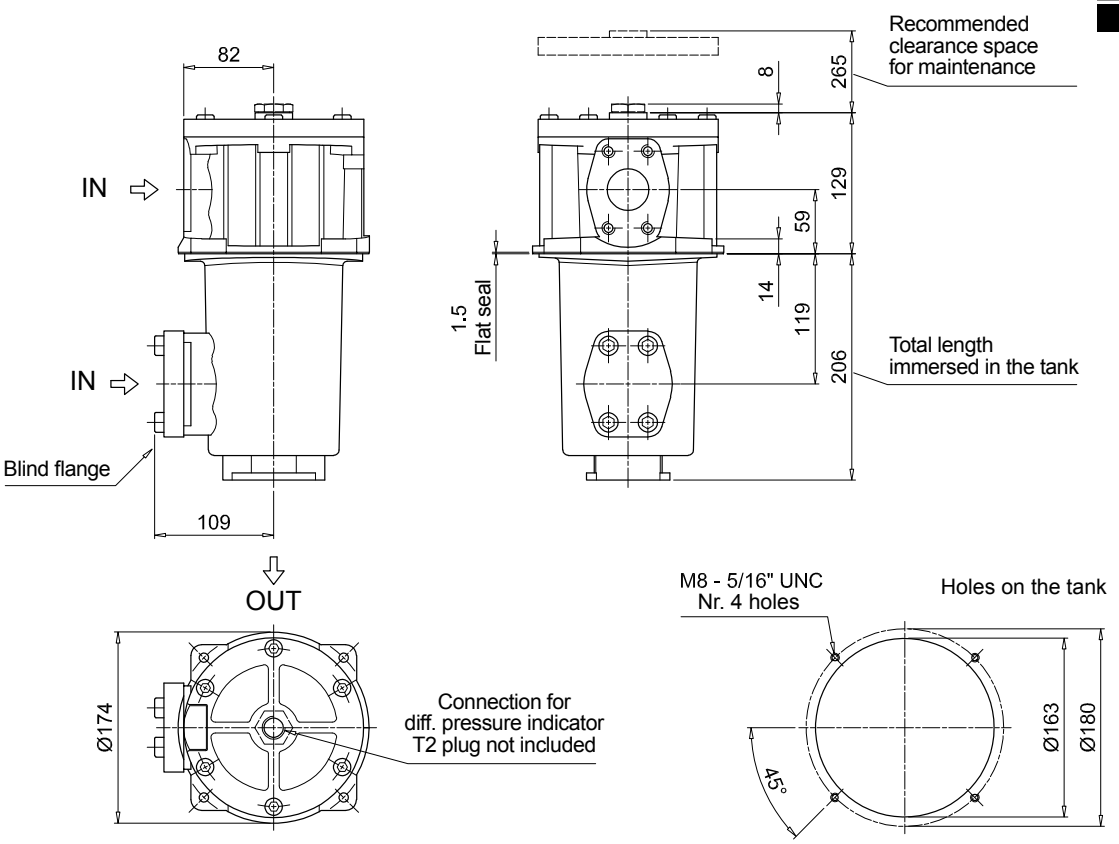

FRI630
Threaded connections "G"

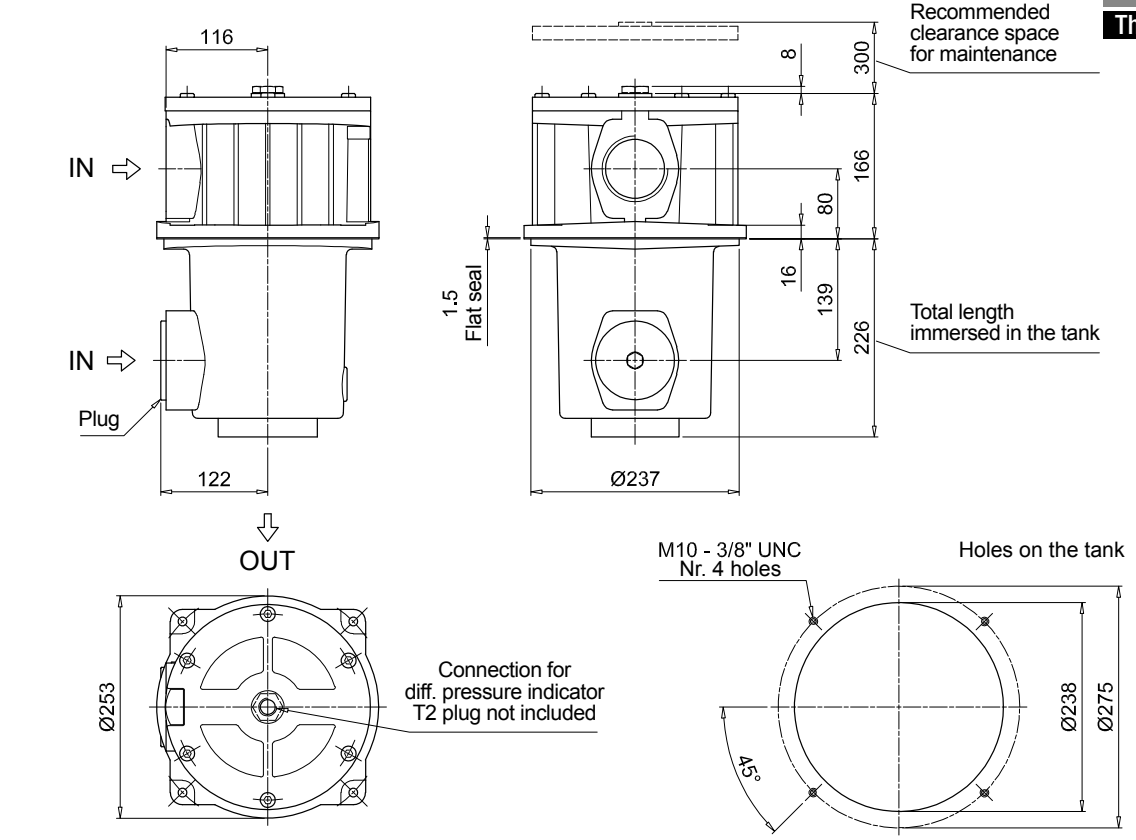

FRI630
Flange connections "F"

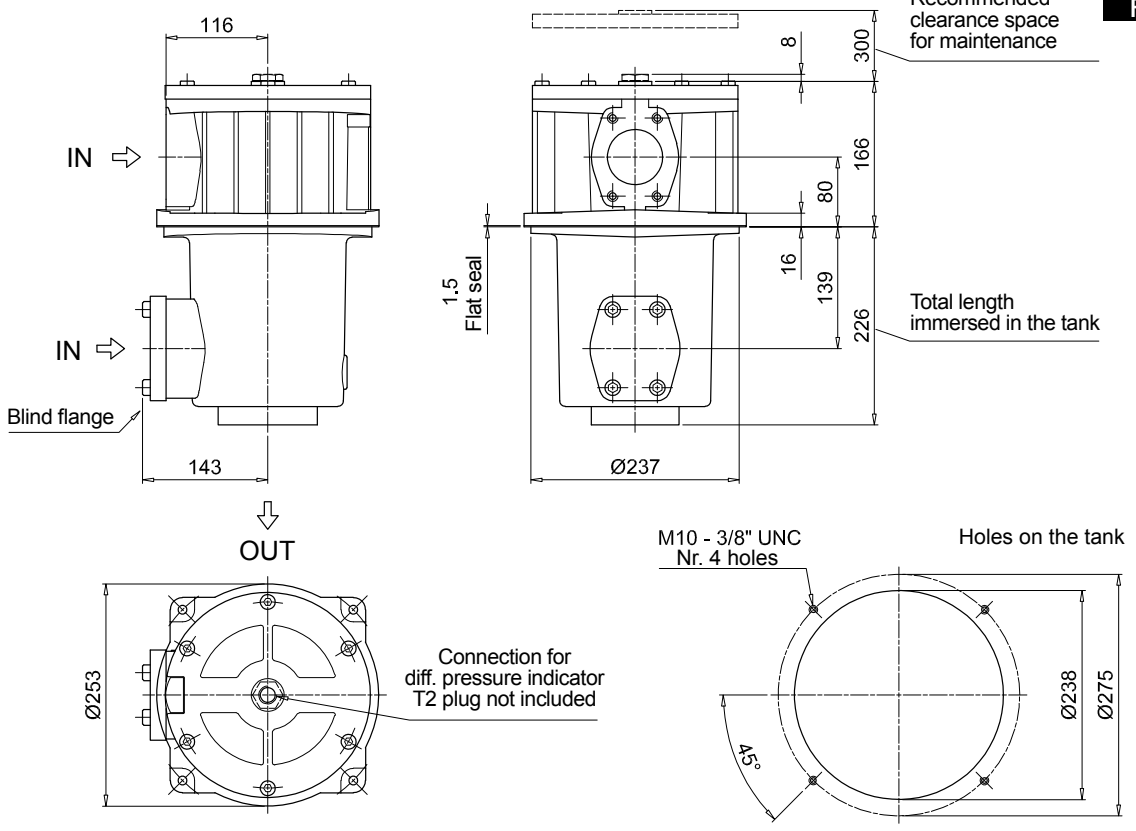

Designation & Ordering code

COMPLETE FILTER

Configuration example 1:	FRI255	S	V	F2	M25	N	P01
Configuration example 2:	FRI850	B	A	F1	A25	V	P01

Series and size
- **FRI255**
- **FRI850**

Bypass valve
- **B** With bypass 2.4 bar
- **S** Without bypass

Seals for FRI255
- **A** NBR
- **V** FPM

Seals and treatments for FRI850		Filtration rating Axx	Mxx	Pxx
A	NBR	•	•	•
V	FPM	•	•	•
W	NBR head anodized	•	•	-
Z	FPM head anodized	•	•	-

Connections for FRI255
- **G1** G 1 1/2"
- **G2** 1 1/2" NPT
- **G3** SAE 24 - 1 7/8" - 12 UN
- **G4** G 1 1/4"
- **G5** 1 1/4" NPT
- **G6** SAE 20 - 1 5/8" - 12 UN
- **F1** 1 1/2" SAE 3000 psi/M
- **F2** 1 1/2" SAE 3000 psi/UNC

Connections for FRI850
- **F1** 3 1/2" SAE 3000 psi/M
- **F2** 3 1/2" SAE 3000 psi/UNC

Filtration rating (filter media)
- **A03** Inorganic microfiber 3 µm
- **A06** Inorganic microfiber 6 µm
- **A10** Inorganic microfiber 10 µm
- **A16** Inorganic microfiber 16 µm
- **A25** Inorganic microfiber 25 µm
- **M25** Wire mesh 25 µm
- **M60** Wire mesh 60 µm
- **M90** Wire mesh 90 µm
- **P10** Resin impregnated paper 10 µm
- **P25** Resin impregnated paper 25 µm

Element Δp
- **N** 10 bar

Execution
- **P01** MP Filtri standard
- **Pxx** Customized

FILTER ELEMENT

Configuration example 1:	CU250	M25	V	P01
Configuration example 2:	CU850	A25	N	P01

Element series and size
- **CU250**
- **CU850**

Filtration rating (filter media)
- **A03** Inorganic microfiber 3 µm
- **A06** Inorganic microfiber 6 µm
- **A10** Inorganic microfiber 10 µm
- **A16** Inorganic microfiber 16 µm
- **A25** Inorganic microfiber 25 µm
- **M25** Wire mesh 25 µm
- **M60** Wire mesh 60 µm
- **M90** Wire mesh 90 µm
- **P10** Resin impregnated paper 10 µm
- **P25** Resin impregnated paper 25 µm

Seals for FRI255
- **N** NBR
- **V** FPM

Seals and treatments for FRI850		Filtration rating Axx	Mxx	Pxx
N	NBR	•	•	•
V	FPM	•	•	•
W	NBR head anodized	•	•	-
Z	FPM head anodized	•	•	-

Execution
- **P01** MP Filtri standard
- **Pxx** Customized

FRI255 CLOGGING INDICATORS

See page 710-711

- **BVA** Axial pressure gauge
- **BVR** Radial pressure gauge
- **BVP** Visual pressure indicator with automatic reset
- **BVQ** Visual pressure indicator with manual reset
- **BEA** Electrical pressure indicator
- **BEM** Electrical pressure indicator
- **BLA** Electrical / visual pressure indicator

FRI850 CLOGGING INDICATORS

See page 710-711

- **DEA** Electrical differential pressure indicator
- **DEM** Electrical differential pressure indicator
- **DLA** Electrical / visual differential pressure indicator
- **DLE** Electrical / visual differential pressure indicator
- **DTA** Electrical differential pressure indicator
- **DVA** Visual differential pressure indicator
- **DVM** Visual differential pressure indicator

PLUGS

See page 737

- **T2** Plug (not included)

FRI255

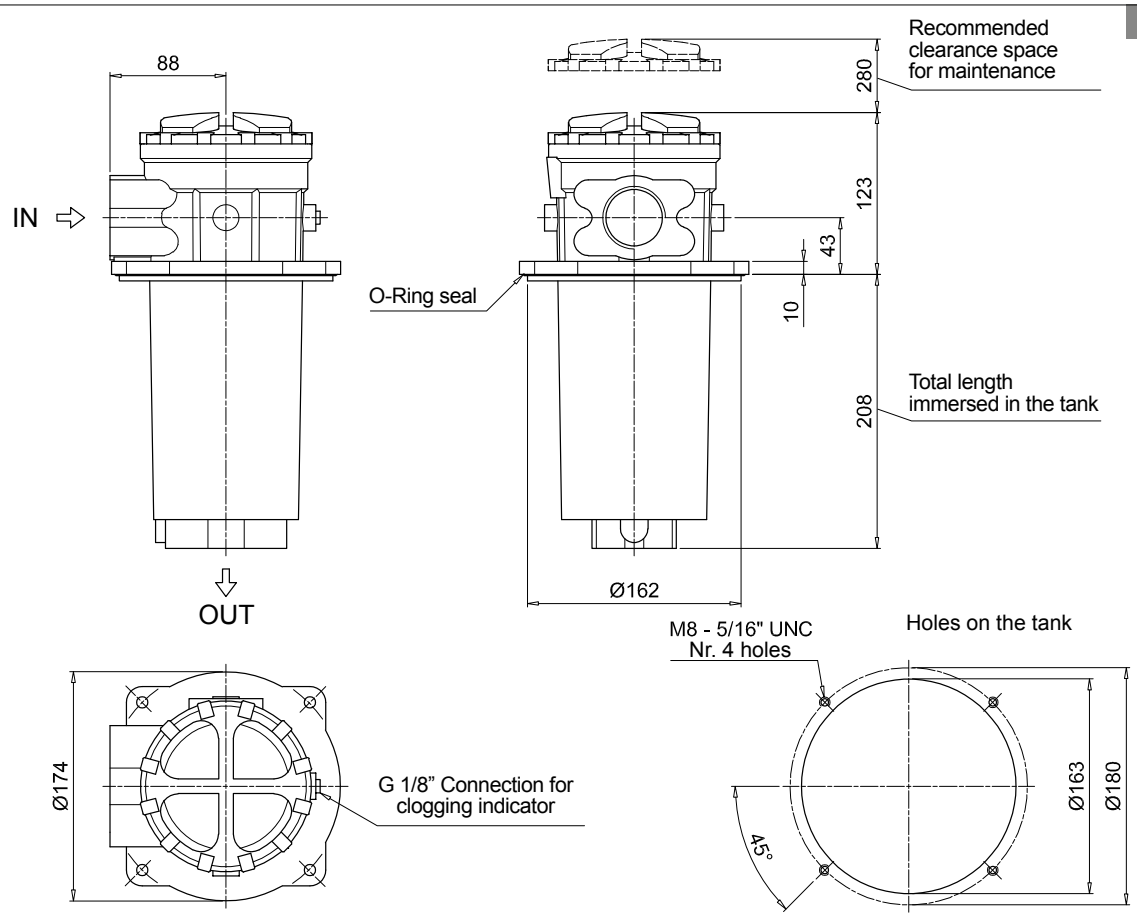

FRI850

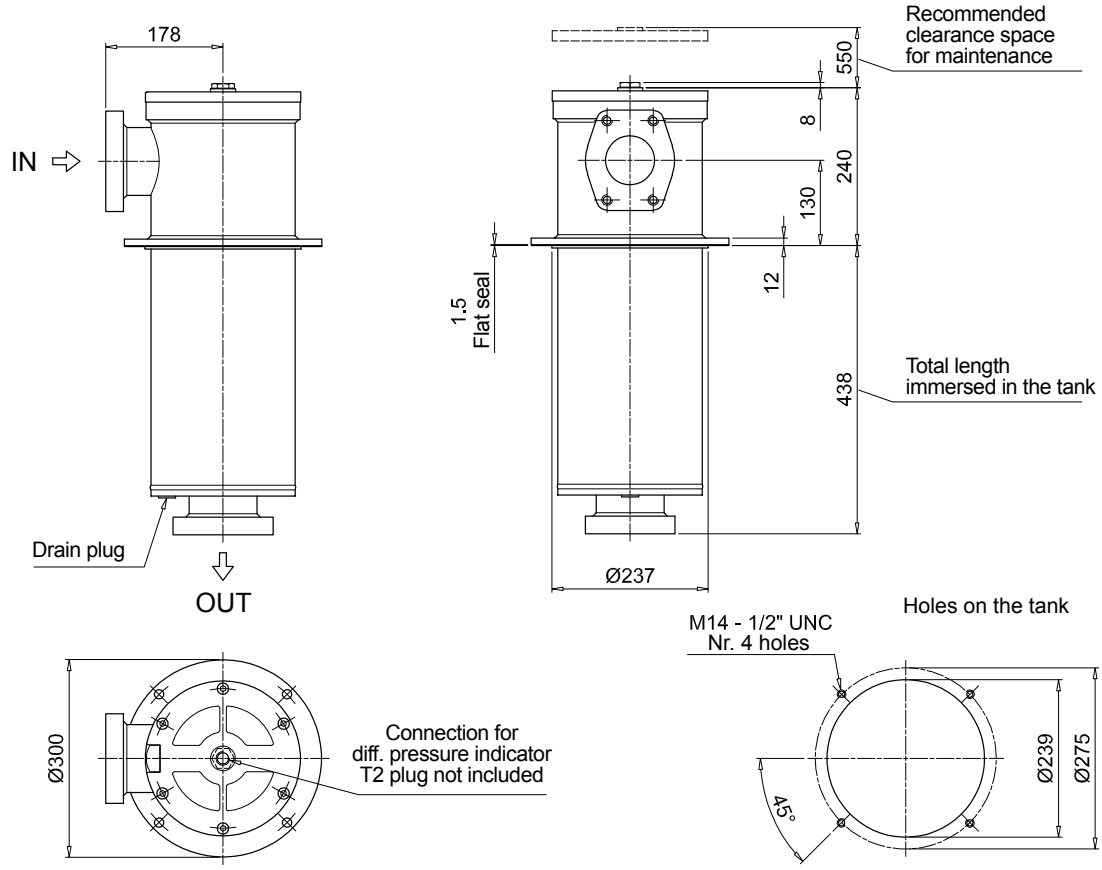

Order number for spare parts

FRI 025 - 040

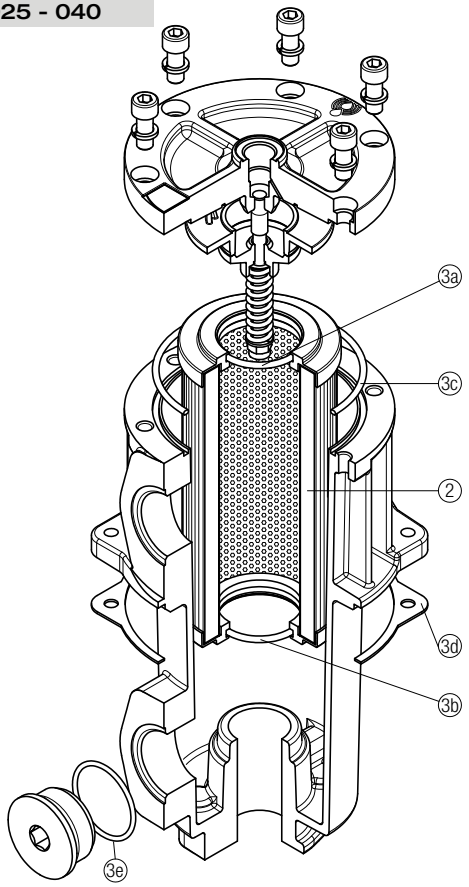

Item:	Q.ty: 1 pc. 2	Q.ty: 1 pc. 3 (3a ÷ 3e)	
Filter series	Filter element	Seal Kit code number NBR	FPM
FRI 025	See order table	02050213	02050220
FRI 040		02050214	02050221

FRI 100 - 250 - 630

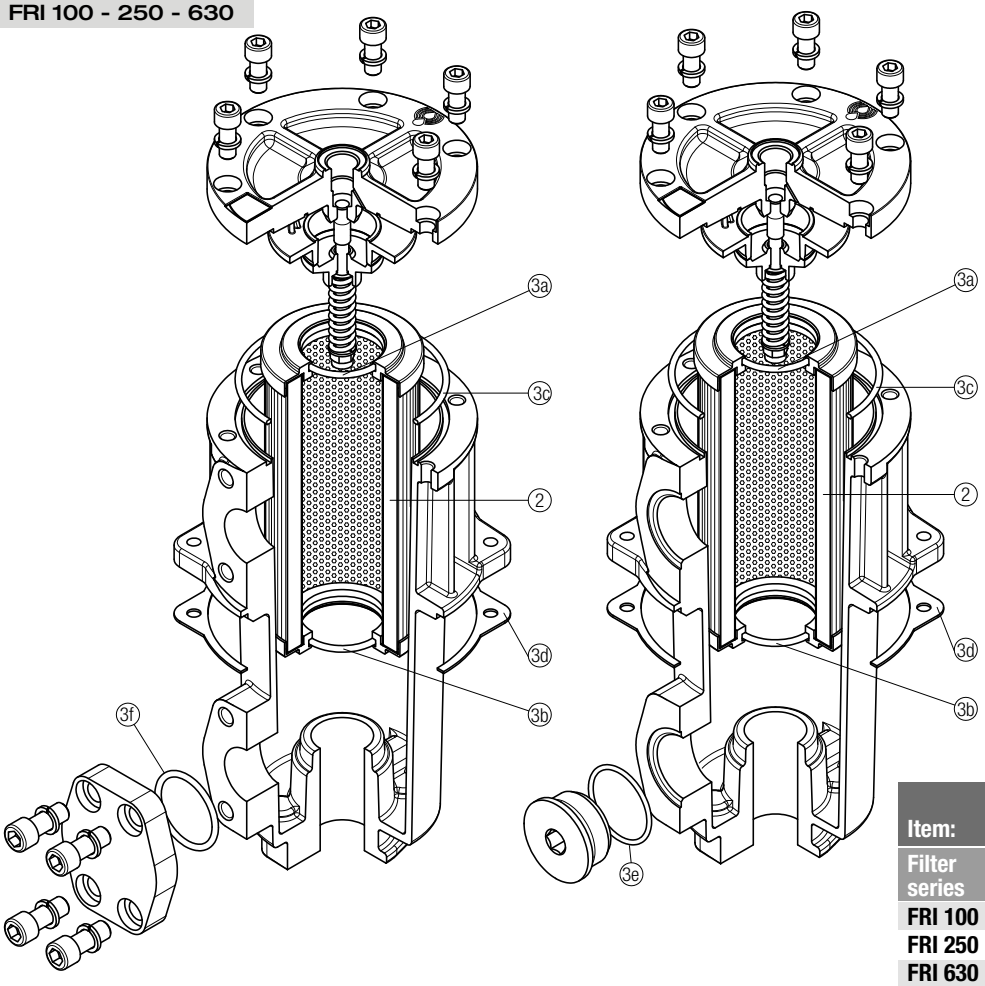

Item:	Q.ty: 1 pc. 2	Q.ty: 1 pc. 3 (3a ÷ 3f)	
Filter series	Filter element	Seal Kit code number NBR	FPM
FRI 100	See order table	02050215	02050222
FRI 250		02050216	02050223
FRI 630		02050217	02050224

Order number for spare parts

FRI 255

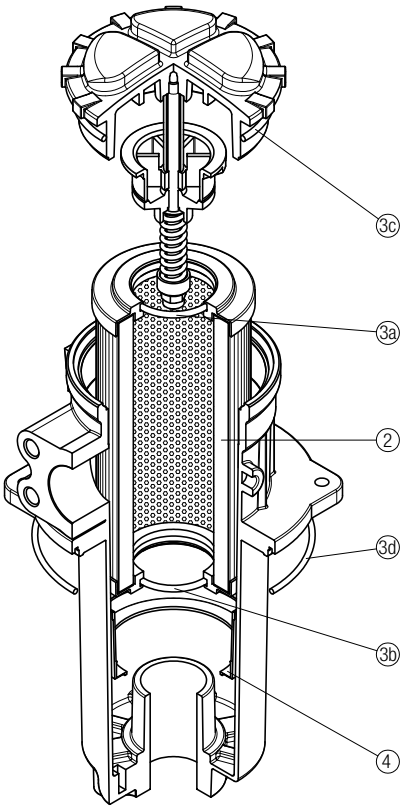

Item:	Q.ty: 1 pc. 2	Q.ty: 1 pc. 3 (3a ÷ 3d)		Q.ty: 1 pc. 4
Filter series	Filter element	Seal Kit code number NBR	FPM	Contamination retainer binder
FRI 255	See order table	02050013	02050014	01060301

FRI 850

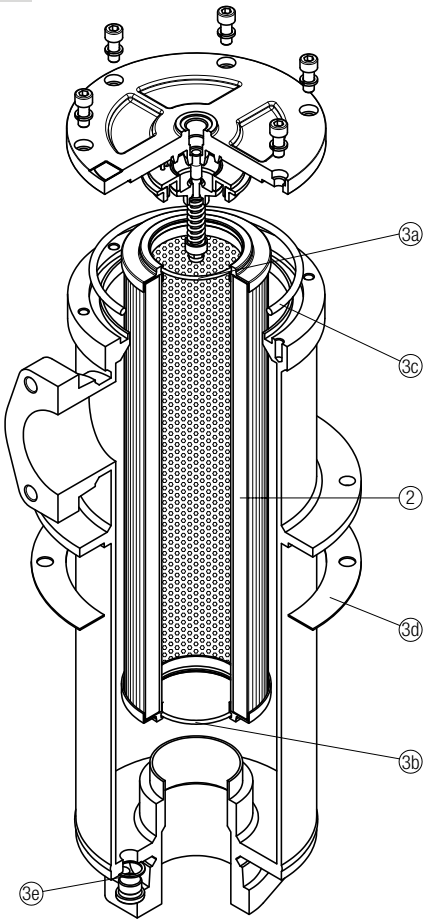

Item:	Q.ty: 1 pc. 2	Q.ty: 1 pc. 3 (3a ÷ 3e)	
Filter series	Filter element	Seal Kit code number NBR	FPM
FRI 850	See order table	02050218	02050225

RF2 series

Maximum working pressure up to 2 MPa (20 bar) - Flow rate up to 615 l/min

RF2 GENERAL INFORMATION

Description

Return filter

Maximum working pressure up to 2 MPa (20 bar)
Flow rate up to 615 l/min

RF2250 and RF2350 are ranges of return filters for side tank mounting with integrated shut-off valve for protection of the reservoir against the system contamination.
They are placed below the minimum oil level, directly connected to the return line of the system.
The shut-off valve closes automatically when the cover is removed, allowing the filter element replacement without the fluid drop.

Available features:
- Female threaded connections up to 1" and flanged connections up to 1 1/2", for a maximum flow rate of 615 l/min
- Bypass valve, to relieve excessive pressure drop across the filter media
- Magnetic filter, to hold the ferrous particles
- Visual, electrical and electronic clogging indicators

Common applications:
- Compact mobile machines
- Compact industrial equipment

Technical data

Filter housing materials
- Filter body: Aluminium
- Cover: Polyamide, GF reinforced
- Valve: Polyamide, GF reinforced - Steel
- Anti-Emptying valve: Steel

Bypass valve
Opening pressure 175 kPa (1.75 bar) ±10%

Δp element type
- Microfibre filter elements - series CU: 10 bar
- Fluid flow through the filter element from OUT to IN

Seals
- Standard NBR series A
- Optional FPM series V

Temperature
From -25 °C to +110 °C

Note
RF2 250-350 filters mounting, see the drawings on page 263 and following

Weights [kg] and volumes [dm³]

Filter series	Weights [kg]	Volumes [dm³]
	Length 1	Length 1
RF2 250	2.6	2.0
RF2 350	2.8	2.0

FILTER ASSEMBLY SIZING
Flow rates [l/min]

		Filter element design - N Series							
Filter series	Length	A03	A06	A10	A16	A25	M25 M60 M90	P10	P25
RF2 250	**1**	148	184	278	307	447	615	447	485
RF2 350	**1**	148	184	278	307	447	615	447	485

Maximum flow rate for a complete return filter with a pressure drop Δp = 0.5 bar.
The reference fluid has a kinematic viscosity of 30 mm^2/s (cSt) and a density of 0.86 kg/dm^3.
For different pressure drop or fluid viscosity we recommend to use our selection software available on www.mpfiltri.com.
You can also calculate the right size using the formulas present on the FILTER SIZING paragraph at the beginning of the full catalogue or at the beginning of the filter family brochure.
Please, contact our Sales Department for further additional information.

Hydraulic symbols

Filter series	Style B - E
RF2 250	•
RF2 350	•

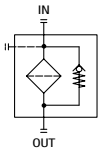

Pressure drop
Filter housings Δp pressure drop

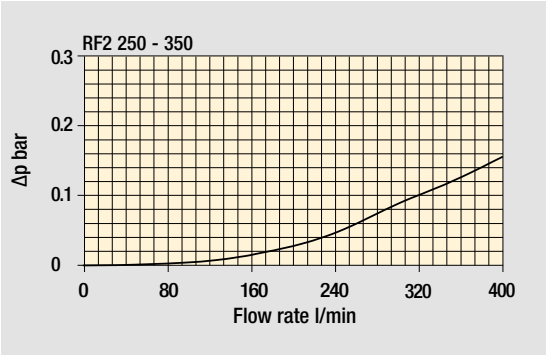

Bypass valve pressure drop

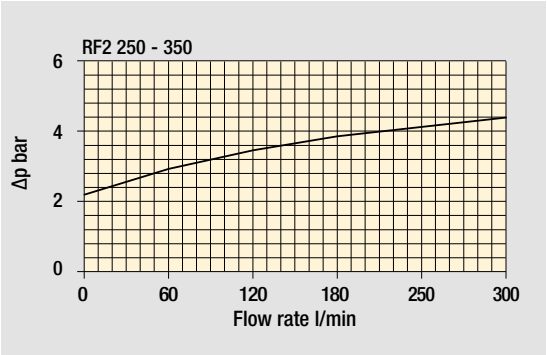

The curves are plotted using mineral oil with density of 0.86 kg/dm^3 in compliance with ISO 3968. Δp varies proportionally with density.

RF2 RF2250 - RF2350

Designation & Ordering code

COMPLETE FILTER

Configuration example 1:	RF2250	V	F2	E	M25	P01
Configuration example 2:	RF2350	A	G1	B	A25	P01

Series and size

RF2250
RF2350

Seals and treatments

A NBR
V FPM

Connections		Aux (only RF2350)	Mxx	Pxx
G1	G 1 1/2"	G 1"	•	•
G2	1 1/2" NPT	-	•	-
G3	SAE 24 - 1 7/8" - 12 UN	SAE 16 - 1 5/16" - 12 UN	•	•
G4	G 1 1/4"	-	•	-
G5	1 1/4" NPT	-	•	-
G6	SAE 20 - 1 5/8" - 12 UN	-	•	-
G7	G 1"	-	•	-
G8	1" NPT	-	•	-
G9	SAE 16 - 1 5/16" - 12 UN	-	•	-
F1	1 1/2" SAE 3000 psi/M	-	•	-
F2	1 1/2" SAE 3000 psi/UNC	-	•	-

Bypass valve

B With bypass 1.75 bar
E With bypass 3 bar

Filtration rating (filter media)

A03	Inorganic microfiber 3 µm	**M25**	Wire mesh 25 µm
A06	Inorganic microfiber 6 µm	**M60**	Wire mesh 60 µm
A10	Inorganic microfiber 10 µm	**M90**	Wire mesh 90 µm
A16	Inorganic microfiber 16 µm	**P10**	Resin impregnated paper 10 µm
A25	Inorganic microfiber 25 µm	**P25**	Resin impregnated paper 25 µm

Execution

P01 MP Filtri standard
Pxx Customized

FILTER ELEMENT

Configuration example 1:	CU250	M25	N	P01
Configuration example 2:	CU250	A25	V	P01

Element series and size

CU250

Filtration rating (filter media)

A03	Inorganic microfiber 3 µm	**M25**	Wire mesh 25 µm
A06	Inorganic microfiber 6 µm	**M60**	Wire mesh 60 µm
A10	Inorganic microfiber 10 µm	**M90**	Wire mesh 90 µm
A16	Inorganic microfiber 16 µm	**P10**	Resin impregnated paper 10 µm
A25	Inorganic microfiber 25 µm	**P25**	Resin impregnated paper 25 µm

Seals and treatments

N NBR
V FPM

Execution

P01 MP Filtri standard
Pxx Customized

RF2250
Threaded connections "G"

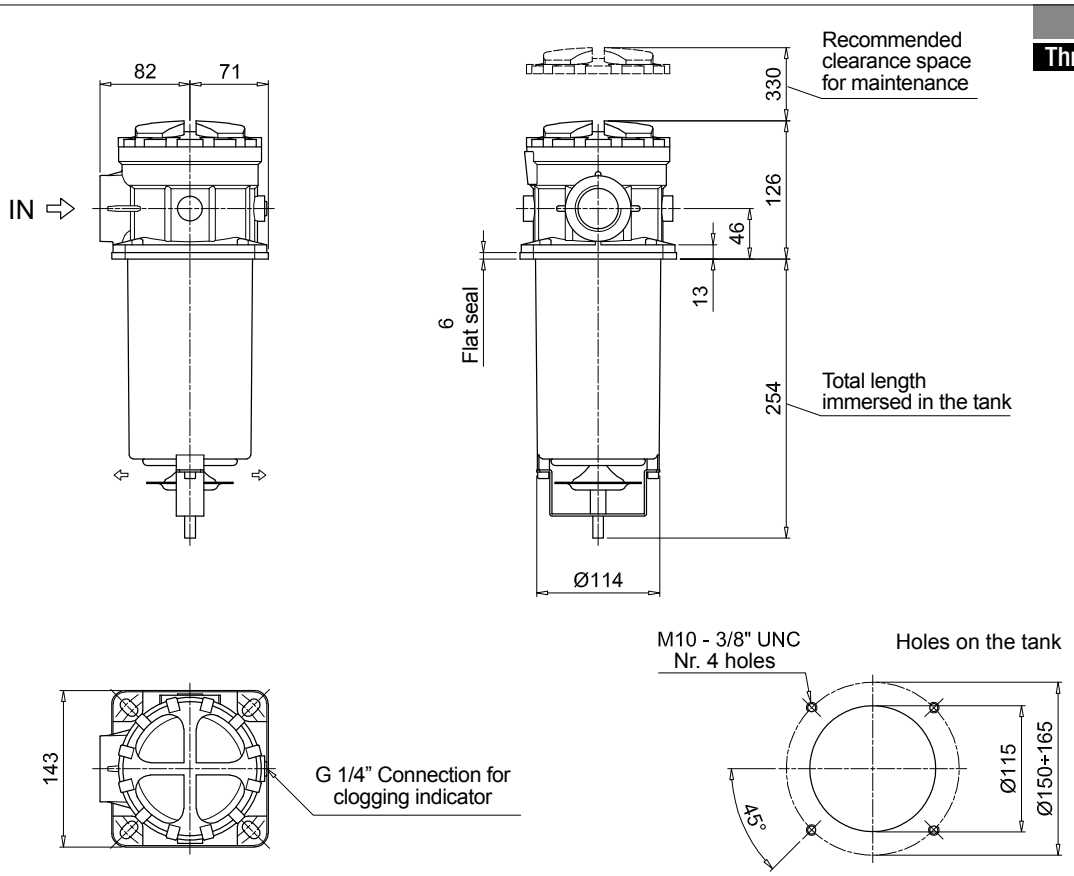

RF2250
Flange connections "F"

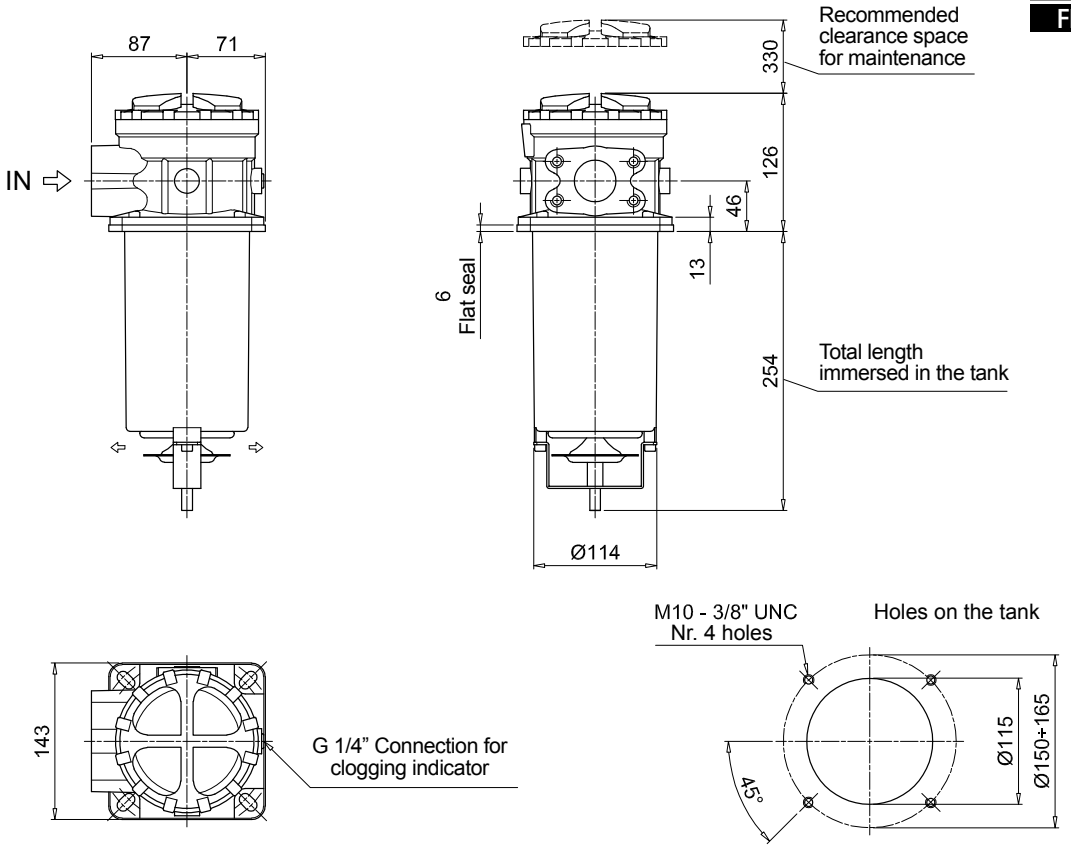

Dimensions

RF2350

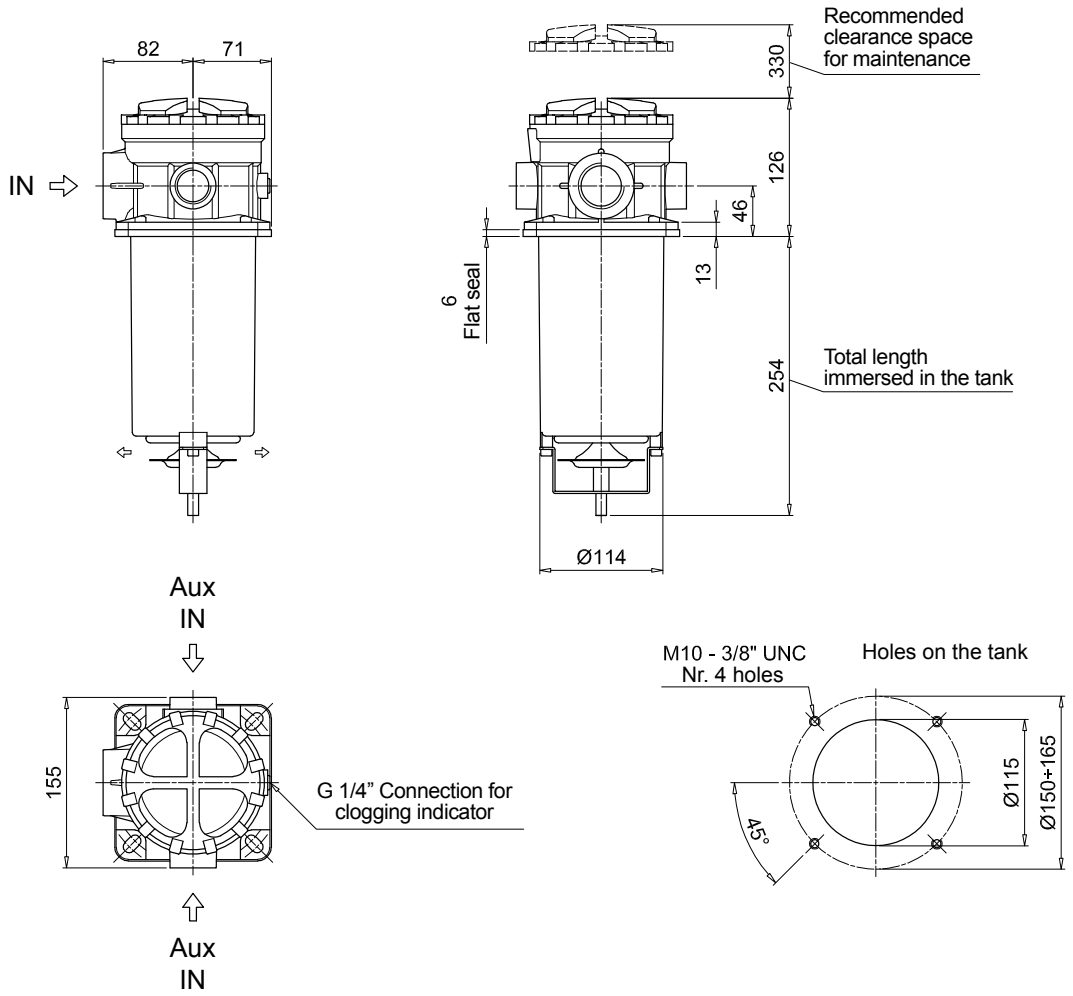

Order number for spare parts

RF2 250 - 350

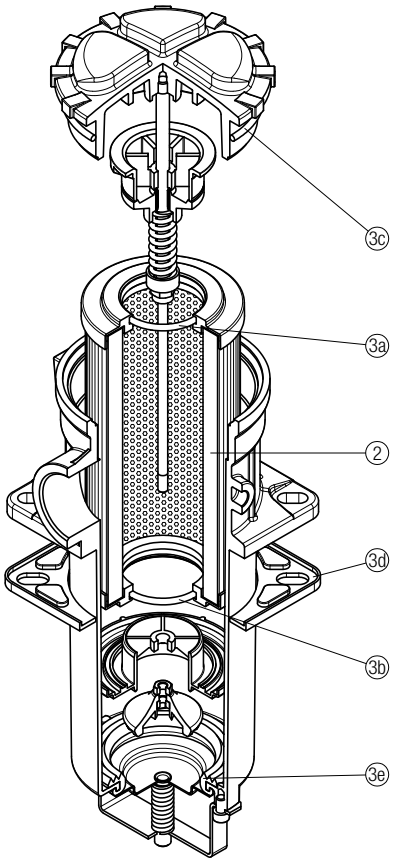

Item:	Q.ty: 1 pc. 2	Q.ty: 1 pc. 3 (3a ÷ 3e)	
Filter series	Filter element	Seal Kit code number NBR	FPM
RF2 250 RF2 350	See order table	02050586	02050587

Accessories

POLYAMIDE EXTENSION TUBE

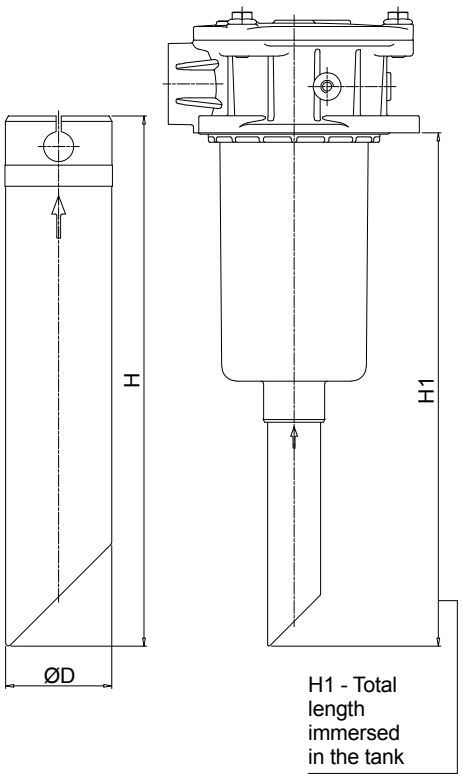

Configuration example: TE | 40 | A | 250

Series
TE

Size	ø D [mm]
25	25
32	32
40	40

Material	
A	Polyamide

Length	H [mm]
200	200
250	250
300	300
350	350
400	400
450	450
500	500

COMPATIBILITY TABLE

Filter series	Filter size				Filter length	TE25	TE32	TE40	Tube length H1 [mm] 200	250	300	350	400	450	500
MPF - MPFX	30				1	•	-	-	266	316	366	416	466	516	566
MPF	100	104	110		1	-	•	-	275	325	375	425	475	525	575
					2				322	372	422	472	522	572	622
					3	-	-	•	400	450	500	550	600	650	700
					4				502	552	602	652	702	752	802
MPFX	100	104	110		1	-	-	•	277	327	377	427	477	527	577
					2				322	372	422	472	522	572	622
					3				400	450	500	550	600	650	700
					4				502	552	602	652	702	752	802
MPF MPFX	181	182	184		1	-	-	•	410	460	510	560	610	660	710
					2				623	673	723	773	823	873	923
MPT MPTX	025		027		1	•	-	-	278	328	378	428	478	528	578
					2				342	392	442	492	542	592	642
					3				380	430	480	530	580	630	680
MPT	110	114	116	120	1	-	•	-	273	323	373	423	473	523	573
					2				320	370	420	470	520	570	620
					3	-	-	•	396	446	496	546	596	646	696
					4				498	548	598	648	698	748	798
MPTX	110	114	116	120	1	-	-	•	273	323	373	423	473	523	573
					2				318	368	418	468	518	568	618
					3				396	446	496	546	596	656	696
					4				498	548	598	648	698	748	798

STEEL EXTENSION TUBE

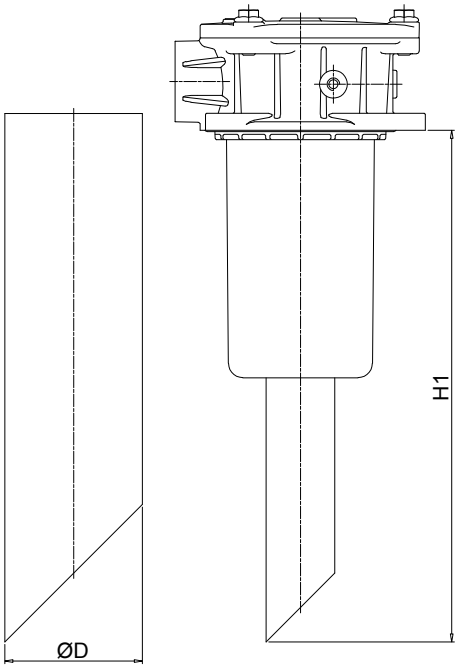

Configuration example:

MPF191 | 2 | A | F1 | A10 | H | B | S60

Length	H1 [mm]
S30	300
S35	350
S40	400
S45	450
S50	500
S60	600
S70	700
S80	800
S90	900

COMPATIBILITY TABLE

Filter series	Filter size				Filter length	ø D [mm] 52	65
MPF	191	192	194		2	•	-
	400	410	450	451	1	•	-
					2	-	•
					3		
	750				1	-	•

DIFFUSER WITH FAST LOCK CONNECTION

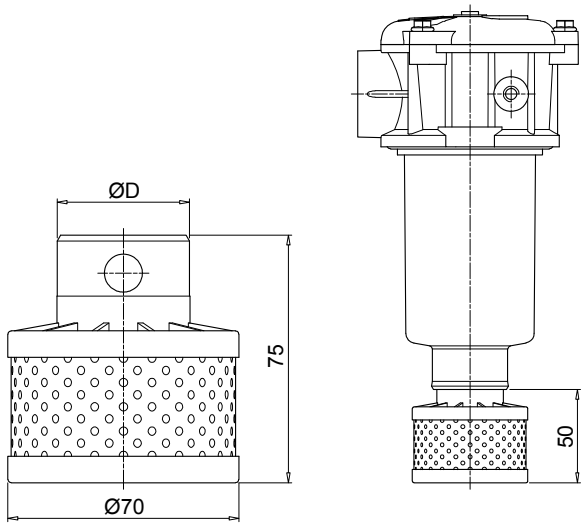

Configuration example: DFS | 32 | A | 075

Series
DFS

Size	ø D [mm]
32	32
40	40

Version	
A	Standard

Length	
075	Standard

COMPATIBILITY TABLE

Filter series	Filter size				Filter Length	DFS32	DFS40
MPF	100	104	110		1	•	-
					2		
					3	-	•
					4		
MPFX	100	104	110		1	-	•
					2		
					3		
					4		
MPT	110	114	116	120	1	•	-
					2		
					3	-	•
					4		
MPTX	110	114	116	120	1	-	•
					2		
					3		
					4		

DIPSTICK

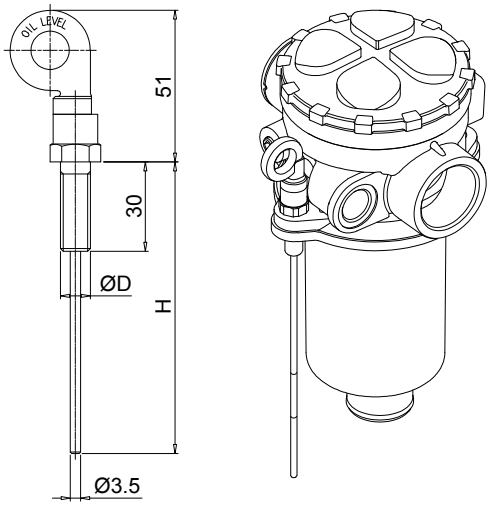

Materials
- Screw: phosphatized steel
- Stick: phosphatized steel
- Handle: Polyamide

Technical data
Working temperature: from -25 °C to +110 °C

Configuration example: DPT | 20 | M10 | A | P01

Series
DPT

Length	H [mm]
15	134
20	184
25	234
30	284
35	334

Fastening	
M8	Fastening with screws ø D = M8
M10	Fastening with screws ø D = M10

Seals	
A	NBR
V	FPM

Execution	
P01	MP Filtri standard
Pxx	Customized

FILLER PLUG

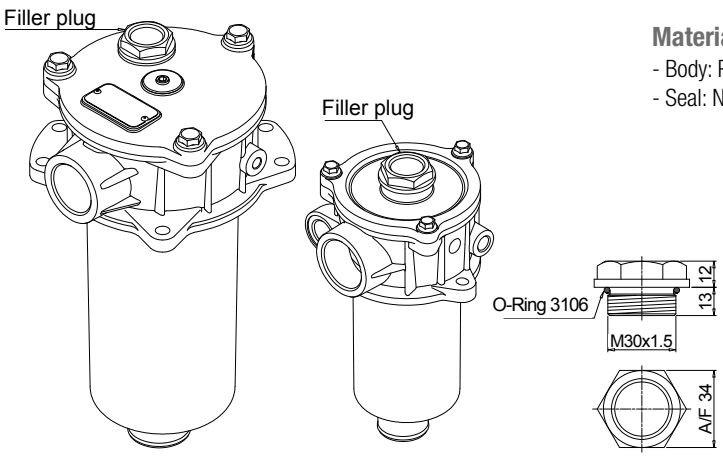

Materials
- Body: Polyamide
- Seal: NBR

Technical data
Tightening torque:
15 N·m

For any further information, please, contact our commercial dept.

CLOGGING INDICATORS

Clogging indicators are devices that check the life time of the filter elements. They measure the pressure drop through the filter element directly connected to the filter housing.
These devices trip when the clogging of the filter element causes a pressure drop increasing across the filter element.
Filter elements are efficient only if their Dirt Holding Capacity is fully exploited. This is achieved by using filter housings equipped with clogging indicators.
The indicator is set to alarm before the element becomes fully clogged.

MP Filtri can supply indicators of the following designs:
- Vacuum switches and gauges
- Pressure switches and gauges
- Differential pressure indicators

These type of devices can be provided with a visual, electrical or both signals. The electronic differential pressure clogging indicator is also available. It provides both analogical 4-20 mA output and digital warning (75% of clogging) and alarm (clogging) outputs.

In the following pages you can find a reference guide about the types of clogging indicators available in the different families of MP Filtri's Hydraulic Filtration range of products.

Clogging Indicators

DESIGNATION, ORDERING CODES & TECHNICAL DATA

INDEX

	Page
QUICK REFERENCE GUIDE	704
CLOGGING INDICATORS ORDERING CODES	
SUCTION FILTERS INDICATORS	709
RETURN FILTERS INDICATORS	710
RETURN / SUCTION FILTERS INDICATORS	712
SPIN-ON FILTERS INDICATORS	714
LOW & MEDIUM PRESSURE FILTERS INDICATORS	716
HIGH PRESSURE FILTERS INDICATORS	717
STAINLESS STEEL HIGH PRESSURE FILTERS INDICATORS	718
FILTERS FOR POTENTIALLY EXPLOSIVE ATMOSPHERE INDICATORS	719
TECHNICAL DATA	
VACUUM INDICATORS	720
BAROMETRIC (PRESSURE) INDICATORS	722
DIFFERENTIAL PRESSURE INDICATORS	726
PLUGS	737

QUICK REFERENCE GUIDE

Ordering codes

Filter family	Filter series		Visual indicators	Electrical indicators	Electronic / Electrical-Visual indicators
SUCTION FILTERS	With bypass valve 0.3 bar	ELIXIR® SFEX060-080-110-160	VVB20P01 VVS20P01	VEB21AA50P01	VLB21AA51P01 VLB21AA52P01 VLB21AA53P01 VLB21AA71P01
		SF2 250 - 350 SF2 500 - 501 - 503 - 504 - 505 SF2 510 - 535 - 540	VVA20P01 VVR20P01	VEA21xA50P01 VEA21xA50P01UL	VLA21xA51P01 VLA21xA52P01 VLA21xA53P01 VLA21xA71P01
RETURN FILTERS	With bypass 1.75 bar	ELIXIR® RFEX060-080-110-160	BVA14P01 BVR14P01 BVP15HP01 BVQ15HP01	BEA15HA50P01 BEA15HA50P01UL BEM15HA41P01	BLA15HA51P01 BLA15HA52P01 BLA15HA53P01 BLA15HA71P01
	Without bypass	ELIXIR® RFEX060-080-110-160	BVA25P01 BVR25P01 BVP20HP01 BVQ20HP01	BEA20HA50P01 BEA20HA50P01UL BEM20HA41P01	BLA20HA51P01 BLA20HA52P01 BLA20HA53P01 BLA20HA71P01
	With bypass 1.75 bar	MDH 250	BVA14P01 BVR14P01 BVP15HP01 BVQ15HP01 DVS12HP01	BEA15HA50P01 BEA15HA50P01UL BEM15HA41P01 DES12HA10P01 DES12HA30P01 DES12HA80P01	BLA15HA51P01 BLA15HA52P01 BLA15HA53P01 BLA15HA71P01
	With bypass 3 bar	MDH 250	BVA25P01 BVR25P01 BVP20HP01 BVQ20HP01 DVS25HP01	BEA20HA50P01 BEA20HA50P01UL BEM20HA41P01 DES25HA10P01 DES25HA30P01 DES25HA80P01	BLA20HA51P01 BLA20HA52P01 BLA20HA53P01 BLA20HA71P01
	With bypass 1.75 bar	MPFX MPTX MPF MPT MPH	BVA14P01 BVR14P01 BVP15HP01 BVQ15HP01	BEA15HA50P01 BEA15HA50P01UL BEM15HA41P01	BLA15HA51P01 BLA15HA52P01 BLA15HA53P01 BLA15HA71P01
	With bypass 3 bar	MPFX MPTX MPF MPT	BVA25P01 BVR25P01 BVP20HP01 BVQ20HP01	BEA20HA50P01 BEA20HA50P01UL BEM20HA41P01	BLA20HA51P01 BLA20HA52P01 BLA20HA53P01 BLA20HA71P01
	With bypass 2.5 bar	MPH			
	With bypass 4.5 bar	MPLX	DVA20xP01 DVM20xP01	DEA20xA50P01 DEA20xA50P01UL DEM20xx10P01 DEM20xx20P01 DEM20xx30P01 DEM20xx35P01 DEU20xA50P01UL	DLA20xA51P01 DLA20xA52P01 DLA20xA71P01 DLE20xA50P01 DLE20xF50P01 DTA20xF70P01
	With bypass 2.4 bar	FRI			

Ordering codes

Filter family	Filter series		Visual indicators	Electrical indicators	Electronic / Electrical-Visual indicators
RETURN / SUCTION FILTERS	With bypass valve 2.5 bar	MRSX 116 - 165 - 166 Suction line	VVB20P01 VVS20P01	VEB21AA50P01	VLB21AA51P01 VLB21AA52P01 VLB21AA53P01 VLB21AA71P01
		MRSX 116 - 165 - 166 Return line	BVA25P01 BVR25P01 BVP20HP01 BVQ20HP01	BEA20HA50P01 BEA20HA50P01UL BEM20HA41P01 BET25HF10P01 BET25HF30P01 BET25HF50P01	BLA20HA51P01 BLA20HA52P01 BLA20HA53P01 BLA20HA71P01
	With bypass valve 2.5 bar	LMP 124 MULTIPORT	BVA25P01 BVR25P01 BVP20HP01 BVQ20HP01 DVA20xP01 DVM20xP01	BEA20HA50P01 BEA20HA50P01UL BEM20HA41P01 BET25HF10P01 BET25HF30P01 BET25HF50P01 DEA20xA50P01 DEM20xx10P01 DEM20xx20P01 DEM20xx30P01 DEM20xx35P01 DEU20xA50P01UL	BLA20HA51P01 BLA20HA52P01 BLA20HA53P01 BLA20HA71P01 DLA20xA51P01 DLA20xA52P01 DLA20xA71P01 DLE20xA50P01 DLE20xF50P01 DTA20xF70P01
SPIN-ON FILTERS	Suction line	MPS 050 - 070 - 100 - 150 MPS 200 - 250 - 300 - 350	VVB20P01 VVS20P01	VEB21AA50P01	VLB21AA51P01 VLB21AA52P01 VLB21AA53P01 VLB21AA71P01
	Return line	MPS 050 - 070 - 100 - 150 MPS 200 - 250 - 300 - 350 MST 050 - 070 - 100 - 150	BVA14P01 BVR14P01 BVP15HP01 BVQ15HP01	BEA15HA50P01 BEA15HA50P01UL BEM15HA41P01	BLA15HA51P01 BLA15HA52P01 BLA15HA53P01 BLA15HA71P01
	In-line	MPS 051 - 071 - 101 - 151 MPS 301 - 351 MSH 050 - 070 - 100 - 150	DVA12xP01 DVM12xP01	DEA12xA50P01 DEM12xAxxP01 DEU20xA50P01UL	DLA12xA51P01 DLA12xA52P01 DLA12xA71P01 DLE12xA50P01 DLE12xF50P01 DLE20xF50P01 DLE20xF50P01 DTA12xF70P01 DTA20xF70P01

QUICK REFERENCE GUIDE

Ordering codes

Filter family	Filter series		Visual indicators	Electrical indicators	Electronic / Electrical-Visual indicators
LOW & MEDIUM PRESSURE FILTERS	With bypass valve 3.5 bar	ELIXIR® LFEX060-080-110-160	DVS25HP01	DES25HA10P01 DES25HA30P01 DES25HA80P01	
		LMP 110 LMP 112 - 116 - 118 - 119 MULTIPORT LMP 120 - 122 - 123 MULTIPORT LMP 210 - 211 - LDP LMP 400 - 401 & 430 - 431 LMP 900 - 901 LMP 902 - 903 LMP 950 - 951 LMP 952 - 953 - 954 LMD 211 - 400 - 401 - 431 - 951 - LDD	DVA20xP01 DVM20xP01	DEA20xA50P01 DEM20xx10P01 DEM20xx20P01 DEM20xx30P01 DEM20xx35P01 DEU20xA50P01UL	DLA20xA51P01 DLA20xA52P01 DLA20xA71P01 DLE20xA50P01 DLE20xF50P01 DTA20xF70P01
	With bypass valve 2.5 bar	LPH 630	DVA20xP01 DVM20xP01	DEA20xA50P01 DEM20xx10P01 DEM20xx20P01 DEM20xx30P01 DEM20xx35P01 DEU20xA50P01UL	DLA20xA51P01 DLA20xA52P01 DLA20xA71P01 DLE20xA50P01 DLE20xF50P01 DTA20xF70P01
	With bypass valve 1.75 bar	LPH 630	DVA12xP01 DVM12xP01 DVS12HP01	DEA12xA50P01 DEM12xx10P01 DEM12xx20P01 DEM12xx30P01 DEM12xx35P01	DLA12xA51P01 DLA12xA52P01 DLA12xA71P01 DLE12xA50P01 DLE12xF50P01 DTA12xF70P01
	Without bypass valve	ELIXIR® LFEX060-080-110-160	DVS40HP01	DES40HA10P01 DES40HA30P01 DES40HA80P01	
		LMP 110 LMP 112 - 116 - 118 - 119 MULTIPORT LMP 120 - 122 - 123 MULTIPORT LMP 210 - 211 - LDP LMP 400 - 401 & 430 - 431 LMP 900 - 901 LMP 902 - 903 LMP 950 - 951 LMP 952 - 953 - 954 LMD 211 - 400 - 401 - 431 - 951 - LDD LPH 630	DVA50xP01 DVM50xP01	DEA50xA50P01 DEM50xx10P01 DEM50xx20P01 DEM50xx30P01 DEM50xx35P01 DEU50xA50P01UL	DLA50xA51P01 DLA50xA52P01 DLA50xA71P01 DLE50xA50P01 DLE50xF50P01 DTA50xF70P01
HIGH PRESSURE FILTERS	With bypass valve 6 bar	FMP 039 - 065 - 135 - 320 FHP 010 - 011 - 065 - 135 - 350 - 351 - 500 FMMX 050 FMM 050 - 150 FHA 051 FHM 006 - 007 - 010 - 050 - 065 - 135 - 320 - 500 FHB 050 - 135 - 320 FHF 325 FHD 021 - 051 - 326 - 333	DVA50xP01 DVM50xP01	DEA50xA50P01 DEM50xx10P01 DEM50xx20P01 DEM50xx30P01 DEM50xx35P01 DEU50xA50P01UL	DLA50xA51P01 DLA50xA52P01 DLA50xA71P01 DLE50xA50P01 DLE50xF50P01
	Without bypass valve	FMP 039 - 065 - 135 - 320 FHP 010 - 011 - 065 - 135 - 350 - 351 - 500 FMMX 050 FMM 050 - 150 FHA 051 FHM 006 - 007 - 010 - 050 - 065 - 135 - 320 - 500 FHB 050 - 135 - 320 FHF 325 FHD 021 - 051 - 326 - 333	DVA70xP01 DVA95xP01 DVM70xP01 DVM95xP01	DEA70xA50P01 DEA95xA50P01 DEM70xx10P01 DEM70xx20P01 DEM70xx30P01 DEM70xx35P01 DEU70xA50P01UL DEM95xx10P01 DEM95xx20P01 DEM95xx30P01 DEM95xx35P01	DLA70xA51P01 DLA70xA52P01 DLA70xA71P01 DLA95xA51P01 DLA95xA52P01 DLA95xA71P01 DLE70xA50P01 DLE70xF50P01 DLE95xA50P01 DLE95xF50P01 DTA70xF70P01 DTA95xF70P01

Ordering codes

Filter family	Filter series		Visual indicators	Electrical indicators	Electronic / Electrical-Visual indicators
STAINLESS STEEL HIGH PRESSURE FILTERS	With bypass valve 6 bar	FZH 012 - 040	DVZ50xP01	DEZ50xA50P01	DLZ50xA51P01 DLZ50xA52P01
	Without bypass valve	FZH 012 - 040	DVZ70xP01 DVZ95xP01	DEZ70xA50P01 DEZ95xA50P01	DLZ70xA51P01 DLZ70xA52P01 DLZ95xA51P01 DLZ95xA52P01
	With bypass valve 6 bar	FZP 039 - 136 FZB 039 FZM 039 FZD 051	DVX50xP01 DVY50xP01	DEX50xA50P01	DLX50xA51P01 DLX50xA52P01
	Without bypass valve	FZP 039 - 136 FZB 039 FZM 039 FZD 010 - 021 - 051	DVX70xP01 DVX95xP01 DVY70xP01 DVY95xP01	DEX70xA50P01 DEX95xA50P01	DLX70xA51P01 DLX70xA52P01 DLX95xA51P01 DLX95xA52P01
FILTERS FOR POTENTIALLY EXPLOSIVE ATMOSPHERE	With bypass valve 6 bar	FMMX 050	DVA50xP01 DVM50xP01	DEH50xA48P01 DEH50xA49P01 DEH50xA70P01	
	Without bypass valve	FMMX 050	DVA70xP01 DVA95xP01 DVM70xP01 DVM95xP01	DEH70xA48P01 DEH70xA49P01 DEH70xA70P01 DEH95xA48P01 DEH95xA49P01 DEH95xA70P01	
	With bypass valve 6 bar	FZP 039 - 136	DVX50xP01 DVY50xP01	DEH50xA48P01 DEH50xA49P01 DEH50xA70P01	
	Without bypass valve	FZP 039 - 136	DVX70xP01 DVX95xP01 DVY70xP01 DVY95xP01	DEH70xA48P01 DEH70xA49P01 DEH70xA70P01 DEH95xA48P01 DEH95xA49P01 DEH95xA70P01	
	With bypass valve 6 bar	FZH 012 - 040	DVZ50xP01		
	Without bypass valve	FZH 012 - 040	DVZ70xP01 DVZ95xP01		

Suitable indicator types

V ACUUM INDICATORS

Vacuum indicators are used on the Suction line to check the efficiency of the filter element.
They measure the pressure downstream of the filter element.
Standard items are produced with R 1/4” EN 10226 connection.
Available products with R 1/8” EN 10226 to be fitted on MPS series.
Vacuum indicators are identified in the Hydraulic Filtration catalogue and in the Quick Reference Guide table by the letter "V".

Example:
V VVB20P01

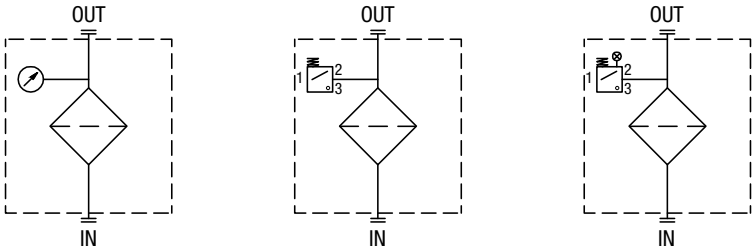

B AROMETRIC (PRESSURE) INDICATORS

Pressure indicators are used on the Return line to check the efficiency of the filter element.
They measure the pressure upstream of the filter element.
Standard items are produced with R 1/8” EN 10226 connection.
Barometric (pressure) indicators are identified in the Hydraulic Filtration catalogue and in the Quick Reference Guide table by the letter "B"

Example:
B BVA14P01

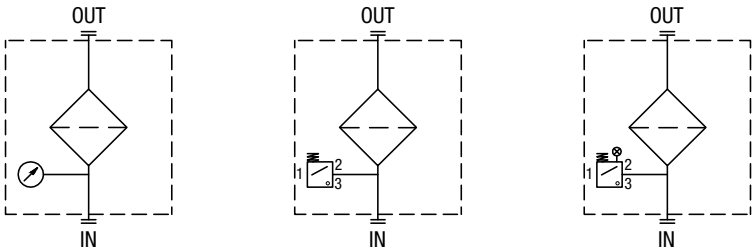

D IFFERENTIAL PRESSURE INDICATORS

Differential pressure indicators are used on the Pressure line to check the efficiency of the filter element.
They measure the pressure upstream and downstream of the filter element (differential pressure).
Standard items are produced with special connection G 1/2” size.
Also available in Stainless Steel models.
Differential pressure indicators are identified in the Hydraulic Filtration catalogue and in the Quick Reference Guide table by the letter "D"

Example:
D DVA20xP01

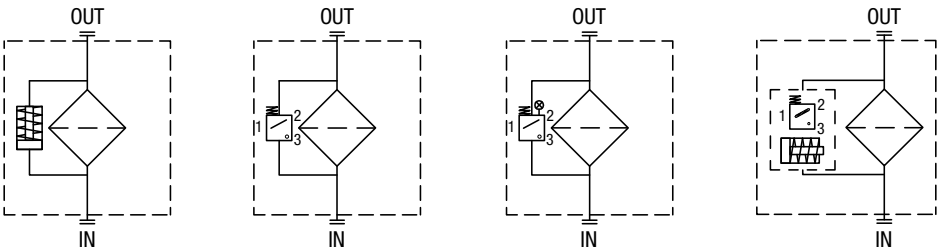

Designation & Ordering code

BAROMETRIC (PRESSURE) INDICATORS

Configuration example 1:	BE	A	15	H	A	41	P01	EX
Configuration example 2:	BL	A	20	H	A	71	P01	
Configuration example 3:	BV	R	14				P01	
Configuration example 4:	BV	P	20	H			P01	

Series	
BE	Electrical pressure indicator
BL	Electrical/Visual pressure indicator
BV	Visual pressure indicator

Type	BE	BL
A Standard type	•	•
M With wired electrical connection	•	-
T With thermal switch	•	-

BV	
A	Axial connection pressure gauge
R	Radial connection pressure gauge
P	Visual indicator with automatic reset
Q	Visual indicator with manual reset

Pressure setting	BEA-BEM	BET	BLA	BVA-BVR	BVP-BVQ
14 1.4 bar	-	-	-	•	-
15 1.5 bar	•	-	•	-	-
20 2.0 bar	•	•	•	-	•
25 2.5 bar	-	•	-	•	-

Seals	BE	BLA	BVA-BVR	BVP-BVQ
H HNBR	•	•	-	•

Thermostat	BEA-BEM	BET	BLA
A Without thermostat	•	-	•
F With thermostat	-	•	-

Electrical connections	BEA	BEM	BET	BL
10 Connection AMP Superseal series 1,5	-	-	•	-
30 Connection Deutsch DT-04-2-P	-	-	•	-
41 Connection via four-core cable	-	•	-	-
50 Connection EN 175301-803	•	-	-	-
51 Connection EN 175301-803, transparent base with lamps 24 Vdc	-	-	-	•
52 Connection EN 175301-803, transparent base with lamps 110 Vdc	-	-	-	•
53 Connection EN 175301-803, transparent base with lamps 230 Vac	-	-	-	•
71 Connection IEC 61076-2-101 D (M12), black base with lamps 24 Vdc	-	-	-	•

Option	
P01	MP Filtri standard
Pxx	Customized

Certifications	BEA	BEM-BET	BL	BV
Without	•	•	•	•
EX ATEX certification	•	-	-	-
UL UL certification	•	-	-	-

DIFFERENTIAL PRESSURE INDICATORS

Configuration example 1:	DE	M	20	H	F	50	P01	
Configuration example 2:	DE	U	50	H	A	50	P01	UL
Configuration example 3:	DL	E	20	V	A	71	P01	
Configuration example 4:	DT	A	20	H	F	70	P01	
Configuration example 5:	DV	M	20	V			P01	

Series	
DE	Electrical differential pressure indicator
DL	Electrical/Visual differential pressure indicator
DT	Electrical differential pressure indicator
DV	Visual differential pressure indicator

Type		DE	DL	DT
A	Standard type	•	•	•
M	With wired electrical connection	•	-	-
U	Standard type 210 bar, UL certified	•	-	-
E	For high power supply	-	•	-
S	Compact version	•	-	-

DV	
A	With automatic reset
M	With manual reset
S	With automatic reset

Pressure setting		DE	DL	DT	DV
12	1.2 bar	•	•	•	•
20	2.0 bar	•	•	•	•
25	2.5 bar	•	-	-	•
40	4.0 bar	•	-	-	•
50	5.0 bar	•	•	•	•
70	7.0 bar	•	•	•	•
95	9.5 bar	•	•	•	•

Seals		DEA	DEM	DES	DL	DT	DVA	DVM	DVS
H	HNBR	•	•	•	•	•	•	•	•
V	FPM	•	•	-	•	•	•	•	-

Thermostat		DEA	DEM	DES	DLA	DLE	DT
A	Without thermostat	•	•	•	•	•	-
F	With thermostat	-	•	-	-	•	•

Electrical connections		DEA	DEM	DES	DLA	DLE	DT
10	Connection AMP Superseal series 1.5	-	•	•	-	-	-
20	Connection AMP Timer Junior	-	•	-	-	-	-
30	Connection Deutsch DT-04-2-P	-	•	•	-	-	-
35	Connection Deutsch DT-04-3-P	-	•	-	-	-	-
50	Connection EN 175301-803	•	-	-	-	•	-
51	Connection EN 175301-803, transparent base with lamps 24 Vdc	-	-	-	•	-	-
52	Connection EN 175301-803, transparent base with lamps 110 Vdc	-	-	-	•	-	-
70	Connection IEC 61076-2-101 D (M12)	-	-	-	-	-	•
71	Connection IEC 61076-2-101 D (M12), black base with lamps 24 Vdc	-	-	-	•	-	-
80	Connection Stud #10-32 UNF	-	-	•	-	-	-

Option	
P01	MP Filtri standard
Pxx	Customized

Certifications		DEU	OTHERS
	Without	-	•
UL	UL certification	•	-

PLUGS

Configuration example	T2	H						

Series		DEA	DEM	DES	DL	DT	DVA	DVM	DVS
T2	Plug	•	•	-	•	•	•	•	-
T4	Plug	-	-	•	-	-	-	-	•

Seals		T2	T4
A	NBR	-	•
H	HNBR	•	-
V	FPM	•	-

Dimensions

DEA*50

Electrical Differential Pressure Indicator
Connection: EN 175301-803

Settings	Ordering code
1.2 bar ±10%	DE A 12 x A 50 P01
2.0 bar ±10%	DE A 20 x A 50 P01
5.0 bar ±10%	DE A 50 x A 50 P01
7.0 bar ±10%	DE A 70 x A 50 P01
9.5 bar ±10%	DE A 95 x A 50 P01

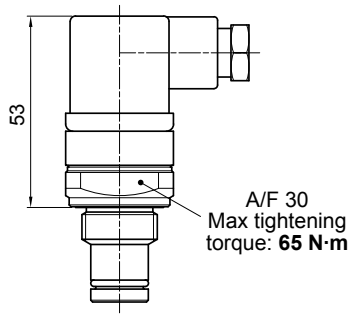

Hydraulic symbol

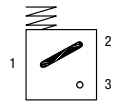

Electrical symbol

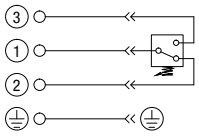

Materials
- Body: Brass
- Base: Black polyamide
- Contacts: Silver
- Seal: HNBR - FPM

Technical data
- Max working pressure: 420 bar
- Proof pressure: 630 bar
- Burst pressure: 1260 bar
- Working temperature: From -25 °C to +110 °C
- Compatibility with fluids: Mineral oils, Synthetic fluids HFB and HFC according to ISO 2943
- Degree protection: IP66 according to EN 60529 IP69K according to ISO 20653

Electrical data
- Electrical connection: EN 175301-803
- Resistive load: 0.2 A / 115 Vdc

DEH*48

Hazardous Area
Electrical Differential Pressure Indicator
Connection via three-core cable - fitting M20x1.5

Settings	Ordering code
2.0 bar ±10%	DE H 20 x A 48 P01
5.0 bar ±10%	DE H 50 x A 48 P01
7.0 bar ±10%	DE H 70 x A 48 P01

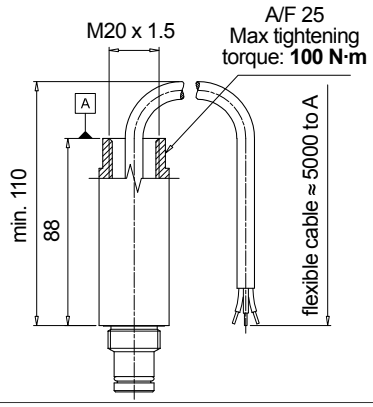

Hydraulic symbol

Electrical symbol

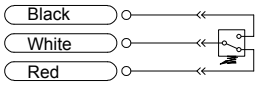

- Certification / Approvals: ATEX, IECEx, EAC TR CU, INMETRO
- Certification included as standard

Materials
- Body: AISI 316L
- Contacts: Rhodium
- Seal: FPM - MFQ

Technical data
- Max working pressure: 420 bar
- Proof pressure: 630 bar
- Burst pressure: 1260 bar
- Working temperature: From -60 °C to +125 °C
- Compatibility with fluids: Mineral oils, Synthetic fluids HFB and HFC according to ISO 2943
- Temperature class: T4 (135 °C) and T6 (85 °C)
- Degree of protection: IP 66/67/68 according to EN 60529
- Connection type:Three-core cable, fitting M20x1.5
- Contact type: SPCO/SPDT (Hermetically sealed - Volt-free contacts)

Electrical data
- Connection via three-core cable - fitting M20x1.5
- Resistive Load: 830 mA / 24 Vdc - 180 mA / 110 Vac
- Electrical Ratings: Ui = 30 Vdc / Ii = 250 mA / Pi = 1.3 W
- Available ATEX product: II 1 GD Ex ia IIC T6 Ga -60°C ≤ Ta ≤ 80°C
  Ex ia IIC T4 Ga -60°C ≤ Ta ≤ 125°C
  II 2 GD Ex db IIC T6* Gb Ex tb IIIC T85°C* Db
  (Tamb : = -60°C to +70°C)* IP66/67
  * alternative T/Class and ambients T4, T135°C
  (Tamb = -60°C to +120°C)

DEH*49

Hazardous Area
Electrical Differential Pressure Indicator
Connection via four-core cable - fitting 1/2" NPT

Settings	Ordering code
2.0 bar ±10%	DE H 20 x A 49 P01
5.0 bar ±10%	DE H 50 x A 49 P01
7.0 bar ±10%	DE H 70 x A 49 P01

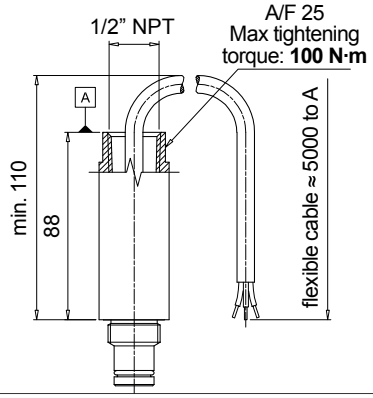

Hydraulic symbol

Electrical symbol

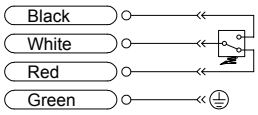

- Certification / Approvals: ATEX, IECEx, EAC TR CU, INMETRO, UL/CSA Class I Division 1 Groups A-D, UL/CSA Class II Division 1 Groups E-G
- Certification included as standard

Materials
- Body: AISI 316L
- Contacts: Rhodium
- Seal: FPM - MFQ

Technical data
- Max working pressure: 420 bar
- Proof pressure: 630 bar
- Burst pressure: 1260 bar
- Working temperature: From -60 °C to +120 °C : ATEX, IECEx, EAC TR CU, INMETRO
  From -60 °C to +105 °C : UL/CSA
- Compatibility with fluids: Mineral oils, Synthetic fluids HFB and HFC according to ISO 2943
- Temperature class: T4 (135 °C) and T6 (85 °C)
- Degree of protection: IP 66/67/68 according to EN 60529
- Connection type:Four-core cable, fitting 1/2" NPT
- Contact type: SPCO/SPDT (Hermetically sealed - Volt-free contacts)

Electrical data
- Connection via four-core cable - fitting 1/2" NPT
- Resistive Load: 830 mA / 24 Vdc - 180 mA / 110 Vac
- Max voltage 150 Vac/dc
- Power 20 W
- Available ATEX product: II 1 GD Ex ia IIC T6 Ga -60°C ≤ Ta ≤ 80°C
  Ex ia IIC T4 Ga -60°C ≤ Ta ≤ 125°C
  II 2 GD Ex db IIC T6* Gb Ex tb IIIC T85°C* Db
  (Tamb : = -60°C to +70°C)* IP66/67
  * alternative T/Class and ambients T4, T135°C
  (Tamb = -60°C to +120°C)

DEH*70

Hazardous Area
Electrical Differential Pressure Indicator
Connection IEC 61076-2-101 D (M12)

Settings	Ordering code
2.0 bar ±10%	DE H 20 x A 70 P01
5.0 bar ±10%	DE H 50 x A 70 P01
7.0 bar ±10%	DE H 70 x A 70 P01

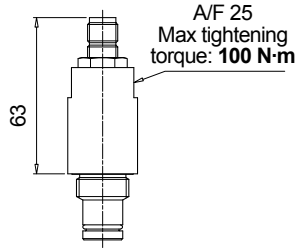

Hydraulic symbol

Electrical symbol

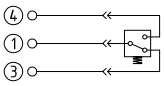

- Certification / Approvals: ATEX, IECEx, EAC TR CU, INMETRO
- Certification included as standard

Materials
- Body: AISI 316L with internal engineered resin switch
- Contacts: Rhodium
- Seal: FPM - MFQ

Technical data
- Max working pressure: 420 bar
- Proof pressure: 630 bar
- Burst pressure: 1260 bar
- Working temperature: From -60 °C to +80 °C
- Compatibility with fluids: Mineral oils, Synthetic fluids HFB and HFC according to ISO 2943
- Temperature class: T6 (85 °C)
- Degree of protection: IP 66/67 according to EN 60529
- Connection type:IEC 61076-2-101 D (M12)
- Contact type: SPCO/SPDT (Hermetically sealed - Volt-free contacts)

Electrical data
- Connection IEC 61076-2-101 D (M12)
- Resistive Load: 830 mA / 24 Vdc - 180 mA / 110 Vdc
- Electrical Ratings: Ui = 30 Vdc, Ii = 250 mA, Pi = 1.3 W
- Available ATEX product: II 1 GD Ex ia IIC T6 Ga -60°C ≤ Ta ≤ 80°C; Ex ia IIC T4 Ga -60°C ≤ Ta ≤ 125°C; II 2 GD Ex db IIC T6* Gb Ex tb IIIC T85°C* Db (Tamb : = -60°C to +70°C)* IP66/67; * alternative T/Class and ambients T4, T135°C (Tamb = -60°C to +120°C)

DEM*F10

Electrical Differential Pressure Indicator
Connection: AMP Superseal series 1.5

Settings	Ordering code
1.2 bar ±10%	DE M 12 x F 10 P01
2.0 bar ±10%	DE M 20 x F 10 P01
5.0 bar ±10%	DE M 50 x F 10 P01
7.0 bar ±10%	DE M 70 x F 10 P01
9.5 bar ±10%	DE M 95 x F 10 P01

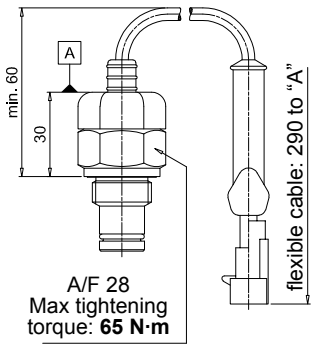

Hydraulic symbol

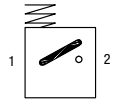

Electrical symbol

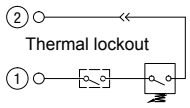

Materials
- Body: Brass
- Base: Black polyamide
- Contacts: Silver
- Seal: HNBR - FPM

Technical data
- Max working pressure: 420 bar
- Proof pressure: 630 bar
- Burst pressure: 1260 bar
- Working temperature: From -25 °C to +110 °C
- Compatibility with fluids: Mineral oils, Synthetic fluids HFB and HFC according to ISO 2943
- Degree protection: IP66 according to EN 60529

Electrical data
- Electrical connection: AMP Superseal series 1.5
- Resistive load: 0.2 A / 115 Vdc
- Switching type: Normally open contacts (NC on request)
- Thermal lockout: Normally open up to 30 °C (option "F")

DEM*F20

Electrical Differential Pressure Indicator
AMP Time junior

Settings	Ordering code
1.2 bar ±10%	DE M 12 x F 20 P01
2.0 bar ±10%	DE M 20 x F 20 P01
5.0 bar ±10%	DE M 50 x F 20 P01
7.0 bar ±10%	DE M 70 x F 20 P01
9.5 bar ±10%	DE M 95 x F 20 P01

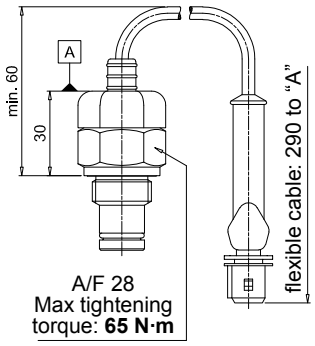

Hydraulic symbol

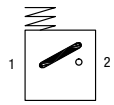

Electrical symbol

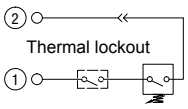

Materials
- Body: Brass
- Base: Black polyamide
- Contacts: Silver
- Seal: HNBR - FPM

Technical data
- Max working pressure: 420 bar
- Proof pressure: 630 bar
- Burst pressure: 1260 bar
- Working temperature: From -25 °C to +110 °C
- Compatibility with fluids: Mineral oils, Synthetic fluids HFB and HFC according to ISO 2943
- Degree protection: IP66 according to EN 60529

Electrical data
- Electrical connection: AMP Time junior
- Resistive load: 0.2 A / 115 Vdc
- Switching type: Normally open contacts (NC on request)
- Thermal lockout: Normally open up to 30 °C (option "F")

Dimensions

DEM*F30

Electrical Differential Pressure Indicator
Deutsch DT-04-2-P

Settings	Ordering code
1.2 bar ±10%	DE M 12 x F 30 P01
2.0 bar ±10%	DE M 20 x F 30 P01
5.0 bar ±10%	DE M 50 x F 30 P01
7.0 bar ±10%	DE M 70 x F 30 P01
9.5 bar ±10%	DE M 95 x F 30 P01

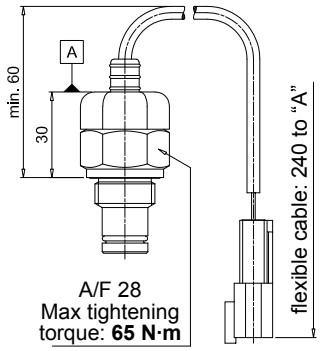

Hydraulic symbol

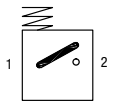

Electrical symbol

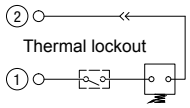

Materials
- Body: Brass
- Base: Black polyamide
- Contacts: Silver
- Seal: HNBR - FPM

Technical data
- Max working pressure: 420 bar
- Proof pressure: 630 bar
- Burst pressure: 1260 bar
- Working temperature: From -25 °C to +110 °C
- Compatibility with fluids: Mineral oils, Synthetic fluids HFB and HFC according to ISO 2943
- Degree protection: IP66 according to EN 60529

Electrical data
- Electrical connection: Deutsch DT-04-2-P
- Resistive load: 0.2 A / 115 Vdc
- Switching type: Normally open contacts (NC on request)
- Thermal lockout: Normally open up to 30 °C (option "F")

DEM*F35

Electrical Differential Pressure Indicator
Deutsch DT-04-3-P

Settings	Ordering code
1.2 bar ±10%	DE M 12 x F 35 P01
2.0 bar ±10%	DE M 20 x F 35 P01
5.0 bar ±10%	DE M 50 x F 35 P01
7.0 bar ±10%	DE M 70 x F 35 P01
9.5 bar ±10%	DE M 95 x F 35 P01

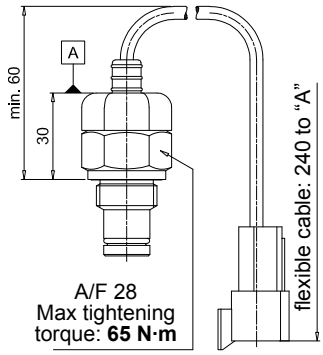

Hydraulic symbol

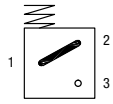

Electrical symbol

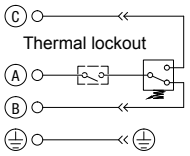

Materials
- Body: Brass
- Base: Black polyamide
- Contacts: Silver
- Seal: HNBR - FPM

Technical data
- Max working pressure: 420 bar
- Proof pressure: 630 bar
- Burst pressure: 1260 bar
- Working temperature: From -25 °C to +110 °C
- Compatibility with fluids: Mineral oils, Synthetic fluids HFB and HFC according to ISO 2943
- Degree protection: IP66 according to EN 60529

Electrical data
- Electrical connection: Deutsch DT-04-3-P
- Resistive load: 0.2 A / 115 Vdc
- Switching type: SPDT contact
- Thermal lockout: Normally open up to 30 °C (option "F")

DEM*A10

Electrical Differential Pressure Indicator
Connection: AMP Superseal series 1.5

Settings	Ordering code
1.2 bar ±10%	DE M 12 x A 10 P01
2.0 bar ±10%	DE M 20 x A 10 P01
5.0 bar ±10%	DE M 50 x A 10 P01
7.0 bar ±10%	DE M 70 x A 10 P01
9.5 bar ±10%	DE M 95 x A 10 P01

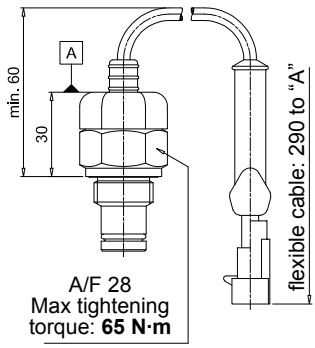

Hydraulic symbol

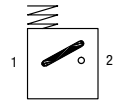

Electrical symbol

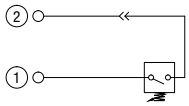

Materials
- Body: Brass
- Base: Black polyamide
- Contacts: Silver
- Seal: HNBR - FPM

Technical data
- Max working pressure: 420 bar
- Proof pressure: 630 bar
- Burst pressure: 1260 bar
- Working temperature: From -25 °C to +110 °C
- Compatibility with fluids: Mineral oils, Synthetic fluids HFB and HFC according to ISO 2943
- Degree protection: IP66 according to EN 60529

Electrical data
- Electrical connection: AMP Superseal series 1.5
- Resistive load: 0.2 A / 115 Vdc
- Switching type: Normally open contacts (NC on request)

DEM*A20

Electrical Differential Pressure Indicator
AMP Time junior

Settings	Ordering code
1.2 bar ±10%	DE M 12 x A 20 P01
2.0 bar ±10%	DE M 20 x A 20 P01
5.0 bar ±10%	DE M 50 x A 20 P01
7.0 bar ±10%	DE M 70 x A 20 P01
9.5 bar ±10%	DE M 95 x A 20 P01

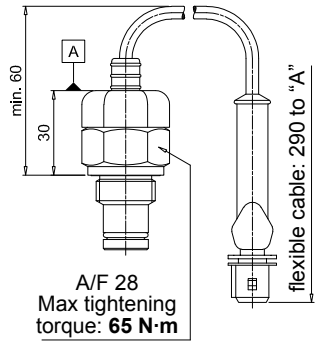

Hydraulic symbol

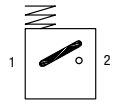

Electrical symbol

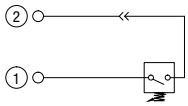

Materials
- Body: Brass
- Base: Black polyamide
- Contacts: Silver
- Seal: HNBR - FPM

Technical data
- Max working pressure: 420 bar
- Proof pressure: 630 bar
- Burst pressure: 1260 bar
- Working temperature: From -25 °C to +110 °C
- Compatibility with fluids: Mineral oils, Synthetic fluids HFB and HFC according to ISO 2943
- Degree protection: IP66 according to EN 60529

Electrical data
- Electrical connection: AMP Time junior
- Resistive load: 0.2 A / 115 Vdc
- Switching type: Normally open contacts (NC on request)

DEM*A30

Electrical Differential Pressure Indicator
Deutsch DT-04-2-P

Settings	Ordering code
1.2 bar ±10%	DE M 12 x A 30 P01
2.0 bar ±10%	DE M 20 x A 30 P01
5.0 bar ±10%	DE M 50 x A 30 P01
7.0 bar ±10%	DE M 70 x A 30 P01
9.5 bar ±10%	DE M 95 x A 30 P01

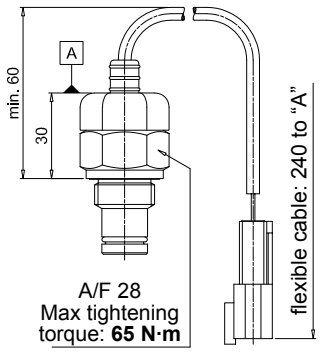

Hydraulic symbol

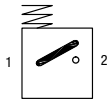

Electrical symbol

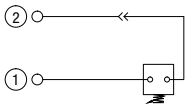

Materials
- Body: Brass
- Base: Black polyamide
- Contacts: Silver
- Seal: HNBR - FPM

Technical data
- Max working pressure: 420 bar
- Proof pressure: 630 bar
- Burst pressure: 1260 bar
- Working temperature: From -25 °C to +110 °C
- Compatibility with fluids: Mineral oils, Synthetic fluids HFB and HFC according to ISO 2943
- Degree protection: IP66 according to EN 60529

Electrical data
- Electrical connection: Deutsch DT-04-2-P
- Resistive load: 0.2 A / 115 Vdc
- Switching type: Normally open contacts (NC on request)

DEM*A35

Electrical Differential Pressure Indicator
Deutsch DT-04-3-P

Settings	Ordering code
1.2 bar ±10%	DE M 12 x A 35 P01
2.0 bar ±10%	DE M 20 x A 35 P01
5.0 bar ±10%	DE M 50 x A 35 P01
7.0 bar ±10%	DE M 70 x A 35 P01
9.5 bar ±10%	DE M 95 x A 35 P01

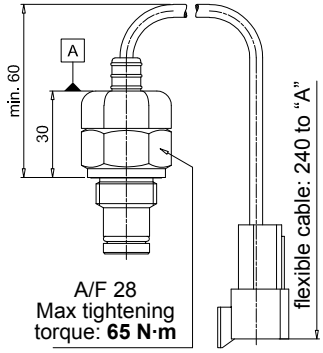

Hydraulic symbol

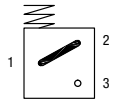

Electrical symbol

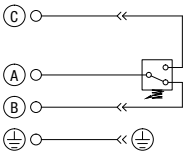

Materials
- Body: Brass
- Base: Black polyamide
- Contacts: Silver
- Seal: HNBR - FPM

Technical data
- Max working pressure: 420 bar
- Proof pressure: 630 bar
- Burst pressure: 1260 bar
- Working temperature: From -25 °C to +110 °C
- Compatibility with fluids: Mineral oils, Synthetic fluids HFB and HFC according to ISO 2943
- Degree protection: IP66 according to EN 60529

Electrical data
- Electrical connection: Deutsch DT-04-3-P
- Resistive load: 0.2 A / 115 Vdc
- Switching type: SPDT contact

Dimensions

DES*10

Electrical Differential Pressure Indicator
AMP Superseal series 1.5

Settings	Ordering code
1.2 bar ±10%	DE S 12 H A 10 P01
2.5 bar ±10%	DE S 25 H A 10 P01
4.0 bar ±10%	DE S 40 H A 10 P01

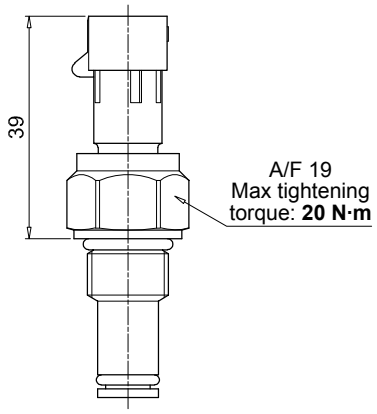

Hydraulic symbol

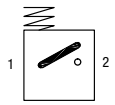

Electrical symbol

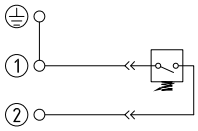

Materials
- Body: Brass
- Internal parts: Brass - Polyamide
- Contacts: Silver
- Seal: HNBR

Technical data
- Max working pressure: 16 bar
- Proof pressure: 24 bar
- Burst pressure: 48 bar
- Working temperature: From -25 °C to +110 °C
- Compatibility with fluids: Mineral oils, Synthetic fluids HFB and HFC according to ISO 2943
- Degree protection: IP67 according to EN 60529

Electrical data
- Electrical connection: AMP Superseal series 1.5
- Resistive load: 0.2 A / 24 Vdc
- Switching type: Normally open contacts (NC on request)

DES*30

Electrical Differential Pressure Indicator
Deutsch DT-04-2-P

Settings	Ordering code
1.2 bar ±10%	DE S 12 H A 30 P01
2.5 bar ±10%	DE S 25 H A 30 P01
4.0 bar ±10%	DE S 40 H A 30 P01

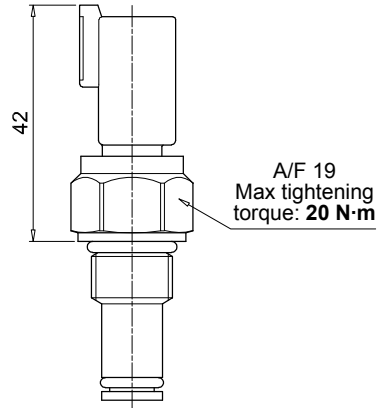

Hydraulic symbol

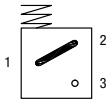

Electrical symbol

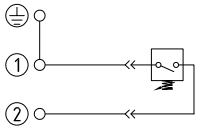

Materials
- Body: Brass
- Internal parts: Brass - Polyamide
- Contacts: Silver
- Seal: HNBR

Technical data
- Max working pressure: 16 bar
- Proof pressure: 24 bar
- Burst pressure: 48 bar
- Working temperature: From -25 °C to +110 °C
- Compatibility with fluids: Mineral oils, Synthetic fluids HFB and HFC according to ISO 2943
- Degree protection: IP67 according to EN 60529

Electrical data
- Electrical connection: Deutsch DT-04-2-P
- Resistive load: 0.2 A / 24 Vdc
- Switching type: Normally open contacts (NC on request)

DES*80

Electrical Differential Pressure Indicator
Stud #10-32 UNF

Settings	Ordering code
1.2 bar ±10%	DE S 12 H A 80 P01
2.5 bar ±10%	DE S 25 H A 80 P01
4.0 bar ±10%	DE S 40 H A 80 P01

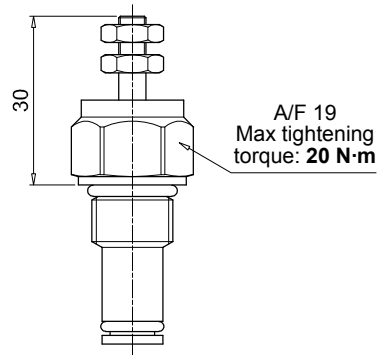

Hydraulic symbol

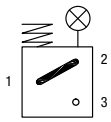

Electrical symbol

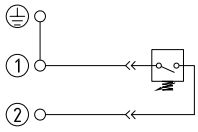

Materials
- Body: Brass
- Internal parts: Brass - Polyamide
- Contacts: Silver
- Seal: HNBR

Technical data
- Max working pressure: 16 bar
- Proof pressure: 24 bar
- Burst pressure: 48 bar
- Working temperature: From -25 °C to +110 °C
- Compatibility with fluids: Mineral oils, Synthetic fluids HFB and HFC according to ISO 2943
- Degree protection: IP67 according to EN 60529

Electrical data
- Electrical connection: Stud #10-32 UNF
- Resistive load: 0.2 A / 24 Vdc
- Switching type: Normally open contacts (NC on request)

DEU*50 UL

Electrical Differential Pressure Indicator
Connection EN 175301-803

Settings	Ordering code
2.0 bar ±10%	DE U 20 H A 50 P01 UL
5.0 bar ±10%	DE U 50 H A 50 P01 UL
7.0 bar ±10%	DE U 70 H A 50 P01 UL

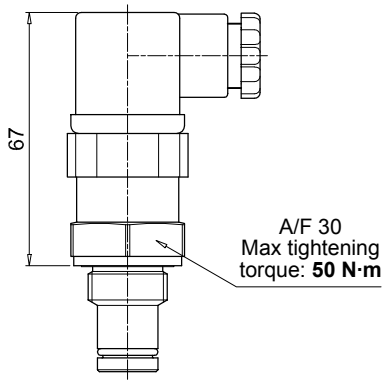

Hydraulic symbol

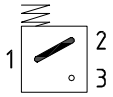

Electrical symbol

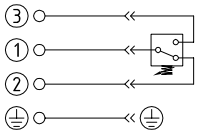

- Certification: UL
- Certification included in EX version

Materials
- Body: Brass
- Base: Black Polyamide
- Contacts: Silver
- Seal: HNBR

Technical data
- Max working pressure: 210 bar
- Proof pressure: 220 bar
- Burst pressure: 880 bar
- Working temperature: From --25 °C to +85 °C
- Compatibility with fluids: Mineral oils, Synthetic fluids HFB and HFC according to ISO 2943
- Degree protection: IP65 according to EN 60529

Electrical data
- Electrical connection: EN 175301-803
- Resistive load: 3 A / 30 Vdc
  3 A / 125 Vac
  3 (3) A / 250 Vac

DEX*50

Electrical Differential Pressure Indicator
Connection: EN 175301-803

Settings	Ordering code
1.2 bar ±10%	DE X 12 x A 50 P01
2.0 bar ±10%	DE X 20 x A 50 P01
5.0 bar ±10%	DE X 50 x A 50 P01
7.0 bar ±10%	DE X 70 x A 50 P01
9.5 bar ±10%	DE X 95 x A 50 P01

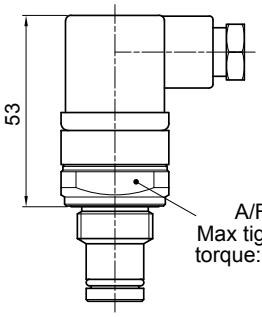

Hydraulic symbol

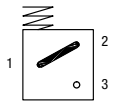

Electrical symbol

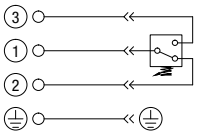

Materials
- Body: AISI 316L
- Base: Black polyamide
- Contacts: Silver
- Seal: HNBR - MFQ

Technical data
- Max working pressure: 420 bar
- Proof pressure: 630 bar
- Burst pressure: 1260 bar
- Working temperature: From -25 °C to +110 °C
- Compatibility with fluids: Mineral oils, Synthetic fluids HFB and HFC according to ISO 2943
- Degree protection: IP66 according to EN 60529
  IP69K according to ISO 20653

Electrical data
- Electrical connection: EN 175301-803
- Resistive load: 0.2 A / 115 Vdc

DEZ*50

Electrical Differential Pressure Indicator
Connection: EN 175301-803

Settings	Ordering code
1.2 bar ±10%	DE Z 12 x A 50 P01
2.0 bar ±10%	DE Z 20 x A 50 P01
5.0 bar ±10%	DE Z 50 x A 50 P01
7.0 bar ±10%	DE Z 70 x A 50 P01
9.5 bar ±10%	DE Z 95 x A 50 P01

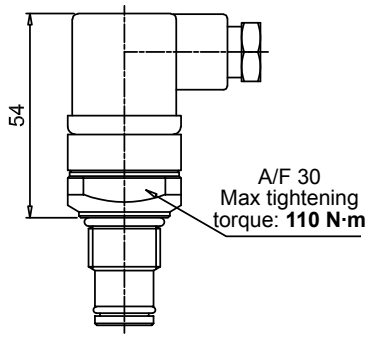

Hydraulic symbol

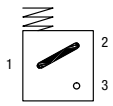

Electrical symbol

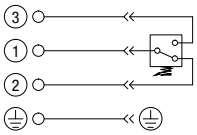

Materials
- Body: AISI 316L
- Base: Black polyamide
- Contacts: Silver
- Seal: HNBR - MFQ

Technical data
- Max working pressure: 700 bar
- Proof pressure: 1050 bar
- Burst pressure: 2100 bar
- Working temperature: From -25 °C to +110 °C
- Compatibility with fluids: Mineral oils, Synthetic fluids HFA, HFB, HFC according to ISO 2943
- Degree protection: IP66 according to EN 60529
  IP69K according to ISO 20653

Electrical data
- Electrical connection: EN 175301-803
- Resistive load: 0.2 A / 115 Vdc

Dimensions

DLA*51 - DLA*52

Electrical/Visual Differential Pressure Indicator
Connection: EN 175301-803
51: Transparent base with lamps 24 Vdc
52: Transparent base with lamps 110 Vdc

Settings	Ordering code
1.2 bar ±10%	DL A 12 x A xx P01
2.0 bar ±10%	DL A 20 x A xx P01
5.0 bar ±10%	DL A 50 x A xx P01
7.0 bar ±10%	DL A 70 x A xx P01
9.5 bar ±10%	DL A 95 x A xx P01

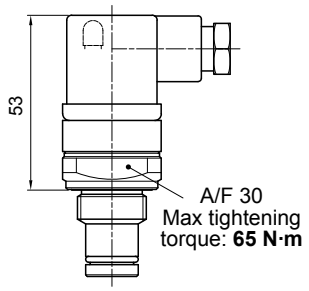

Hydraulic symbol

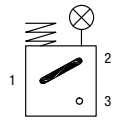

Electrical symbol

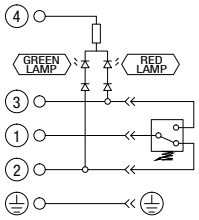

Materials
- Body: Brass
- Base: Transparent polyamide
- Contacts: Silver
- Seal: HNBR - FPM

Technical data
- Max working pressure: 420 bar
- Proof pressure: 630 bar
- Burst pressure: 1260 bar
- Working temperature: From -25 °C to +110 °C
- Compatibility with fluids: Mineral oils, Synthetic fluids HFB and HFC according to ISO 2943
- Degree protection: IP66 according to EN 60529 IP69K according to ISO 20653

Electrical data

- Electrical connection:	EN 175301-803	
- Type	51	52
- Lamps	24 Vdc	110 Vdc
- Resistive load:	1 A / 24 Vdc	1 A / 110 Vdc

DLA*71

Electrical/Visual Differential pressure indicator
Connection IEC 61076-2-101 D (M12),
black base with lamps 24 Vdc

Settings	Ordering code
1.2 bar ±10%	DL A 12 x A 71 P01
2.0 bar ±10%	DL A 20 x A 71 P01
5.0 bar ±10%	DL A 50 x A 71 P01
7.0 bar ±10%	DL A 70 x A 71 P01
9.5 bar ±10%	DL A 95 x A 71 P01

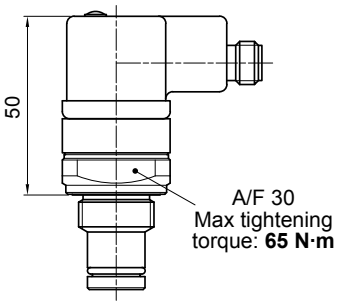

Hydraulic symbol

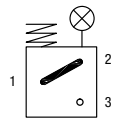

Electrical symbol

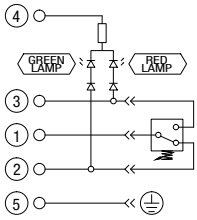

Materials
- Body: Brass
- Base: Black polyamide
- Contacts: Silver
- Seal: HNBR - FPM

Technical data
- Max working pressure: 420 bar
- Proof pressure: 630 bar
- Burst pressure: 1260 bar
- Working temperature: From -25 °C to +110 °C
- Compatibility with fluids: Mineral oils, Synthetic fluids HFB and HFC according to ISO 2943
- Degree protection: IP65 according to EN 60529 IP69K according to ISO 20653

Electrical data
- Electrical connection: IEC 61076-2-101 D (M12)
- Lamps 24 Vdc (black base)
- Resistive load: 0.4 A / 24 Vdc

DLE*A50

Electrical/Visual Differential Pressure Indicator
Without term. Connections: EN 175301-803

Settings	Ordering code
1.2 bar ±10%	DL E 12 x A 50 P01
2.0 bar ±10%	DL E 20 x A 50 P01
5.0 bar ±10%	DL E 50 x A 50 P01
7.0 bar ±10%	DL E 70 x A 50 P01
9.5 bar ±10%	DL E 95 x A 50 P01

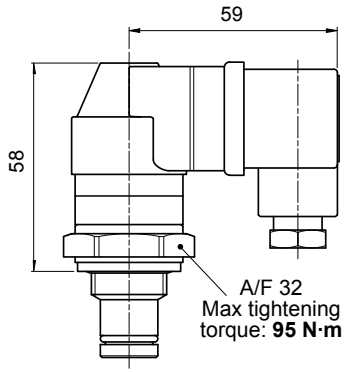

Hydraulic symbol

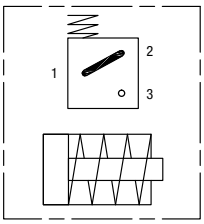

Electrical symbol

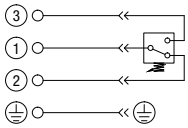

Materials
- Body: Brass
- Base: Black polyamide
- Contacts: Silver
- Seal: HNBR - FPM

Technical data
- Max working pressure: 420 bar
- Proof pressure: 630 bar
- Burst pressure: 1260 bar
- Working temperature: From -25 °C to +110 °C
- Compatibility with fluids: Mineral oils, Synthetic fluids HFB and HFC according to ISO 2943
- Degree protection: IP65 according to EN 60529

Electrical data
- Electrical connections: EN 175301-803
- Resistive load: 5 A / 250 Vac
- Available the connector with lamps

DLE*F50

Electrical/Visual Differential Pressure Indicator
With term. Connections: EN 175301-803

Settings	Ordering code
1.2 bar ±10%	DL E 12 x F 50 P01
2.0 bar ±10%	DL E 20 x F 50 P01
5.0 bar ±10%	DL E 50 x F 50 P01
7.0 bar ±10%	DL E 70 x F 50 P01
9.5 bar ±10%	DL E 95 x F 50 P01

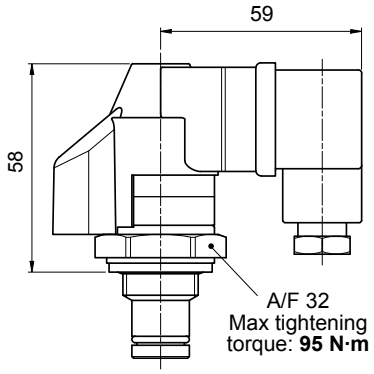

Hydraulic symbol

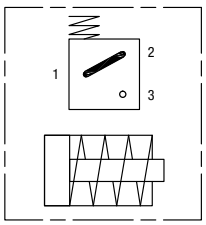

Electrical symbol

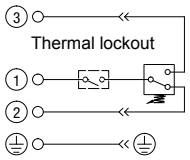

Materials
- Body: Brass
- Base: Black polyamide
- Contacts: Silver
- Seal: HNBR - FPM

Technical data
- Max working pressure: 420 bar
- Proof pressure: 630 bar
- Burst pressure: 1260 bar
- Working temperature: From -25 °C to +110 °C
- Compatibility with fluids: Mineral oils, Synthetic fluids HFB and HFC according to ISO 2943
- Degree protection: IP65 according to EN 60529

Electrical data
- Electrical connections: EN 175301-803
- Resistive load: 5 A / 250 Vac
- Thermal lockout setting: +30 °C

DLX*51 - DLX*52

Electrical/Visual Differential Pressure Indicator
Connection: EN 175301-803

51: Transparent base with lamps 24 Vdc
52: Transparent base with lamps 110 Vdc

Settings	Ordering code
1.2 bar ±10%	DL X 12 x A 5x P01
2.0 bar ±10%	DL X 20 x A 5x P01
5.0 bar ±10%	DL X 50 x A 5x P01
7.0 bar ±10%	DL X 70 x A 5x P01
9.5 bar ±10%	DL X 95 x A 5x P01

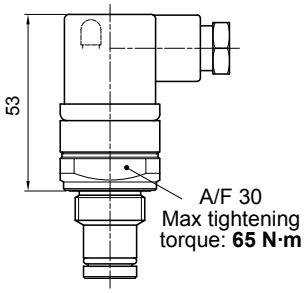

Hydraulic symbol

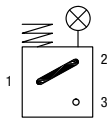

Electrical symbol

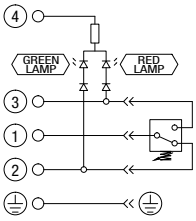

Materials
- Body: AISI 316L
- Base: Transparent polyamide
- Contacts: Silver
- Seal: HNBR - MFQ

Technical data
- Max working pressure: 420 bar
- Proof pressure: 630 bar
- Burst pressure: 1260 bar
- Working temperature: From -25 °C to +110 °C
- Compatibility with fluids: Mineral oils, Synthetic fluids HFB and HFC according to ISO 2943
- Degree protection: IP66 according to EN 60529 IP69K according to ISO 20653

Electrical data

- Electrical connection:	EN 175301-803	
- Type	51	52
- Lamps	24 Vdc	110 Vdc
- Resistive load:	1 A / 24 Vdc	1 A / 110 Vdc

DLZ*51 - DLZ*52

Electrical/Visual Differential Pressure Indicator
Connection: EN 175301-803

51: Transparent base with lamps 24 Vdc
52: Transparent base with lamps 110 Vdc

Settings	Ordering code
1.2 bar ±10%	DL Z 12 x A 5x P01
2.0 bar ±10%	DL Z 20 x A 5x P01
5.0 bar ±10%	DL Z 50 x A 5x P01
7.0 bar ±10%	DL Z 70 x A 5x P01
9.5 bar ±10%	DL Z 95 x A 5x P01

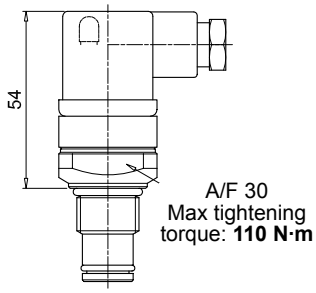

Hydraulic symbol

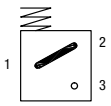

Electrical symbol

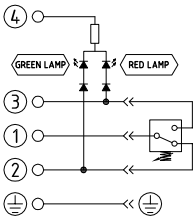

Materials
- Body: AISI 316L
- Base: Transparent polyamide
- Contacts: Silver
- Seal: HNBR - MFQ

Technical data
- Max working pressure: 700 bar
- Proof pressure: 1050 bar
- Burst pressure: 2100 bar
- Working temperature: From -25 °C to +110 °C
- Compatibility with fluids: Mineral oils, Synthetic fluids HFB and HFC according to ISO 2943
- Degree protection: IP66 according to EN 60529 IP69K according to ISO 20653

Electrical data

- Electrical connection:	EN 175301-803	
- Type	51	52
- Lamps	24 Vdc	110 Vdc
- Resistive load:	1 A / 24 Vdc	1 A / 110 Vdc

Dimensions

DTA*F70

Electronic Differential Pressure Indicator
Connection: IEC 61076-2-101 D (M12)

Settings	Ordering code
1.2 bar ±10%	DT A 12 x F 70 P01
2.0 bar ±10%	DT A 20 x F 70 P01
5.0 bar ±10%	DT A 50 x F 70 P01
7.0 bar ±10%	DT A 70 x F 70 P01
9.5 bar ±10%	DT A 95 x F 70 P01

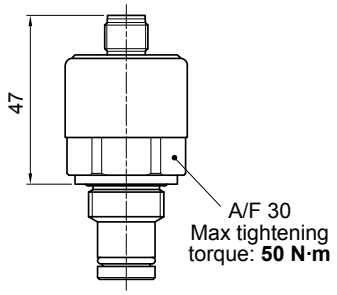

Hydraulic symbol

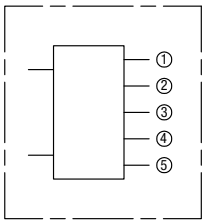

Electrical symbol

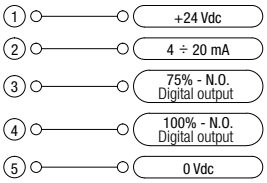

Materials
- Body: Brass
- Internal parts: Brass - Polyamide
- Contacts: Silver
- Seal: HNBR - FPM

Technical data
- Max working pressure: 420 bar
- Proof pressure: 630 bar
- Burst pressure: 1260 bar
- Compatibility with fluids: Mineral oils, Synthetic fluids HFB and HFC according to ISO 2943
- Degree protection: IP67 according to EN 60529

Electrical data
- Electrical connection: IEC 61076-2-101 D (M12)
- Power supply: 24 Vdc
- Analogue output: From 4 to 20 mA
- Thermal lockout: 30 °C (all output signals stalled up to 30 °C)

DVA

Visual Differential Pressure Indicator

Settings	Ordering code
1.2 bar ±10%	DV A 12 x P01
2.0 bar ±10%	DV A 20 x P01
5.0 bar ±10%	DV A 50 x P01
7.0 bar ±10%	DV A 70 x P01
9.5 bar ±10%	DV A 95 x P01

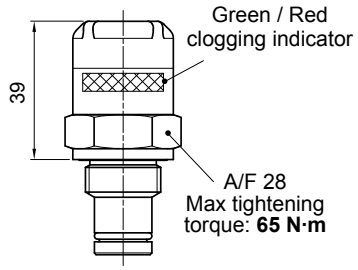

Hydraulic symbol

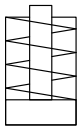

Materials
- Body: Brass
- Internal parts: Brass - Polyamide
- Seal: HNBR - FPM

Technical data
- Reset: Automatic reset
- Max working pressure: 420 bar
- Proof pressure: 630 bar
- Burst pressure: 1260 bar
- Working temperature: From -25 °C to +110 °C
- Compatibility with fluids: Mineral oils, Synthetic fluids HFB and HFC according to ISO 2943
- Degree protection: IP65 according to EN 60529

DVM

Visual Differential Pressure Indicator

Settings	Ordering code
1.2 bar ±10%	DV M 12 x P01
2.0 bar ±10%	DV M 20 x P01
5.0 bar ±10%	DV M 50 x P01
7.0 bar ±10%	DV M 70 x P01
9.5 bar ±10%	DV M 95 x P01

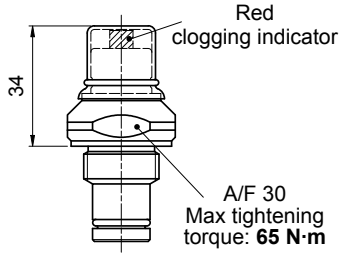

Hydraulic symbol

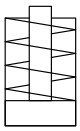

Materials
- Body: Brass
- Internal parts: Brass - Polyamide
- Seal: HNBR - FPM

Technical data
- Reset: Manual reset
- Max working pressure: 420 bar
- Proof pressure: 630 bar
- Burst pressure: 1260 bar
- Working temperature: From -25 °C to +110 °C
- Compatibility with fluids: Mineral oils, Synthetic fluids HFB and HFC according to ISO 2943
- Degree protection: IP65 according to EN 60529

DVS

Visual Differential Pressure Indicator

Settings	Ordering code
1.2 bar ±10%	DV S 12 H P01
2.5 bar ±10%	DV S 25 H P01
4.0 bar ±10%	DV S 40 H P01

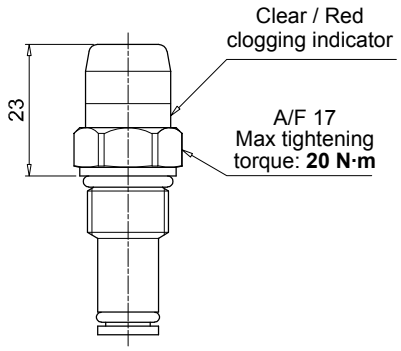

Hydraulic symbol

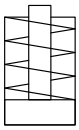

Materials
- Body: Brass
- Internal parts: Brass - Polyamide
- Seal: HNBR

Technical data
- Reset: Automatic reset
- Max working pressure: 16 bar
- Proof pressure: 24 bar
- Burst pressure: 48 bar
- Working temperature: From -25 °C to +110 °C
- Compatibility with fluids: Mineral oils, Synthetic fluids HFB and HFC according to ISO 2943
- Degree protection: IP67 according to EN 60529

DVX

Visual Differential Pressure Indicator

Settings	Ordering code
1.2 bar ±10%	DV X 12 x P01
2.0 bar ±10%	DV X 20 x P01
5.0 bar ±10%	DV X 50 x P01
7.0 bar ±10%	DV X 70 x P01
9.5 bar ±10%	DV X 95 x P01

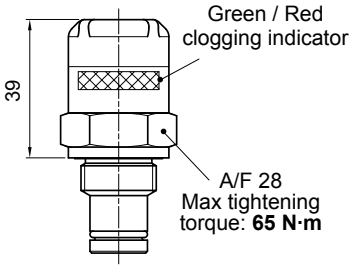

Hydraulic symbol

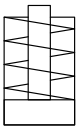

Materials
- Body: AISI 316L
- Internal parts: AISI 316L - Polyamide
- Seal: HNBR - MFQ

Technical data
- Reset: Automatic reset
- Max working pressure: 420 bar
- Proof pressure: 630 bar
- Burst pressure: 1260 bar
- Working temperature: From -25 °C to +110 °C
- Compatibility with fluids: Mineral oils, Synthetic fluids HFB and HFC according to ISO 2943
- Degree protection: IP65 according to EN 60529

DVY

Visual Differential Pressure Indicator

Settings	Ordering code
1.2 bar ±10%	DV Y 12 x P01
2.0 bar ±10%	DV Y 20 x P01
5.0 bar ±10%	DV Y 50 x P01
7.0 bar ±10%	DV Y 70 x P01
9.5 bar ±10%	DV Y 95 x P01

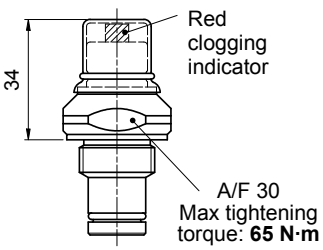

Hydraulic symbol

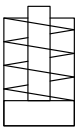

Materials
- Body: AISI 316L
- Internal parts: AISI 316L - Polyamide
- Seal: HNBR - MFQ

Technical data
- Reset: Manual reset
- Max working pressure: 420 bar
- Proof pressure: 630 bar
- Burst pressure: 1260 bar
- Working temperature: From -25 °C to +110 °C
- Compatibility with fluids: Mineral oils, Synthetic fluids HFB and HFC according to ISO 2943
- Degree protection: IP65 according to EN 60529

Dimensions

DVZ

Visual Differential Pressure Indicator

Settings	Ordering code
1.2 bar ±10%	DV Z 12 x P01
2.0 bar ±10%	DV Z 20 x P01
5.0 bar ±10%	DV Z 50 x P01
7.0 bar ±10%	DV Z 70 x P01
9.5 bar ±10%	DV Z 95 x P01

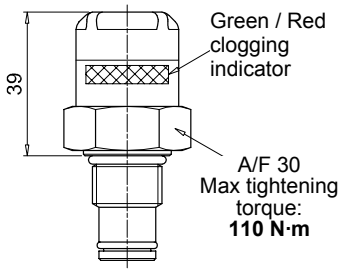

Hydraulic symbol

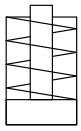

Materials

- Body: AISI 316L
- Internal parts: AISI 316L - Polyamide
- Seal: HNBR - MFQ

Technical data

- Reset: Automatic reset
- Max working pressure: 700 bar
- Proof pressure: 1050 bar
- Burst pressure: 2100 bar
- Working temperature: From -25 °C to +110 °C
- Compatibility with fluids: Mineral oils, Synthetic fluids HFB and HFC according to ISO 2943
- Degree protection: IP65 according to EN 60529

T2

Plug

Seal	Ordering code
HNBR	T2 H
FPM	T2 V

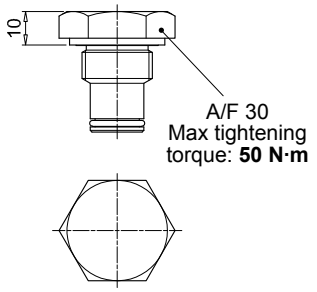

Materials
- Body:
  Phosphatized steel
- Seal:
  HNBR / FPM

T4

Plug

Seal	Ordering code
NBR	T4 A

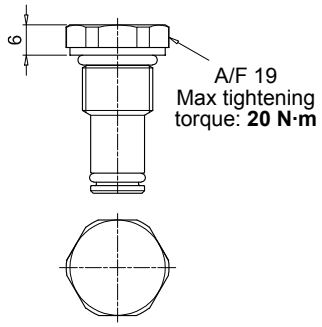

Materials
- Body:
  Anodized aluminium
- Seal:
  NBR

X2

Stainless Steel plug 420 bar

Seal	Ordering code
HNBR	X2 H
FPM	X2 F
MFQ	X2 Q

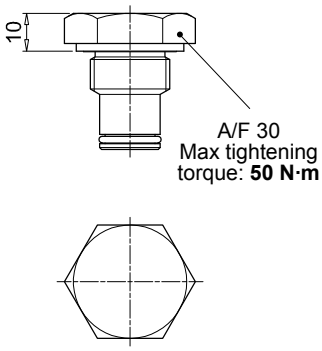

Materials
- Body:
  AISI 316L
- Seal:
  HNBR / FPM / MFQ

X3

Stainless Steel plug 700 bar (only for FZH)

Seal	Ordering code
HNBR	X3 H
FPM	X3 F
MFQ	X3 Q

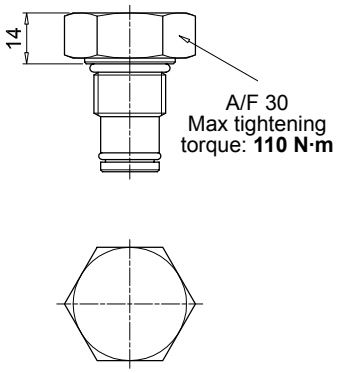

Materials
- Body:
  AISI 316L
- Seal:
  HNBR / FPM / MFQ

NOTES

All data, details and words contained in this publication are provided for use by technically qualified personnel at their discretion, without warranty of any kind.
MP Filtri reserves the right to make modifications to the models and versions of the described products at any time for both technical and/or commercial reasons.
For updated information please visit our website: *www.mpfiltri.com*
The colors and the pictures of the products are purely indicative.
Any reproduction, partial or total, of this document is strictly forbidden.
All rights are strictly reserved

WORLDWIDE NETWORK

CANADA • CHINA • FRANCE • GERMANY • INDIA • SINGAPORE
UNITED ARAB EMIRATES • UNITED KINGDOM • USA

MPFILTRI®

PASSION TO PERFORM

in f

mpfiltri.com

MP Filtri reserves the right to make modifications to the models and versions of the described products at any time for both technical and/or commercial reasons.
For updated information please visit our website: www.mpfiltri.com. The colors and the pictures of the products are purely indicative.
Any reproduction, partial or total, of this document is strictly forbidden. All rights are strictly reserved

MF001000017
EN - 2024.11